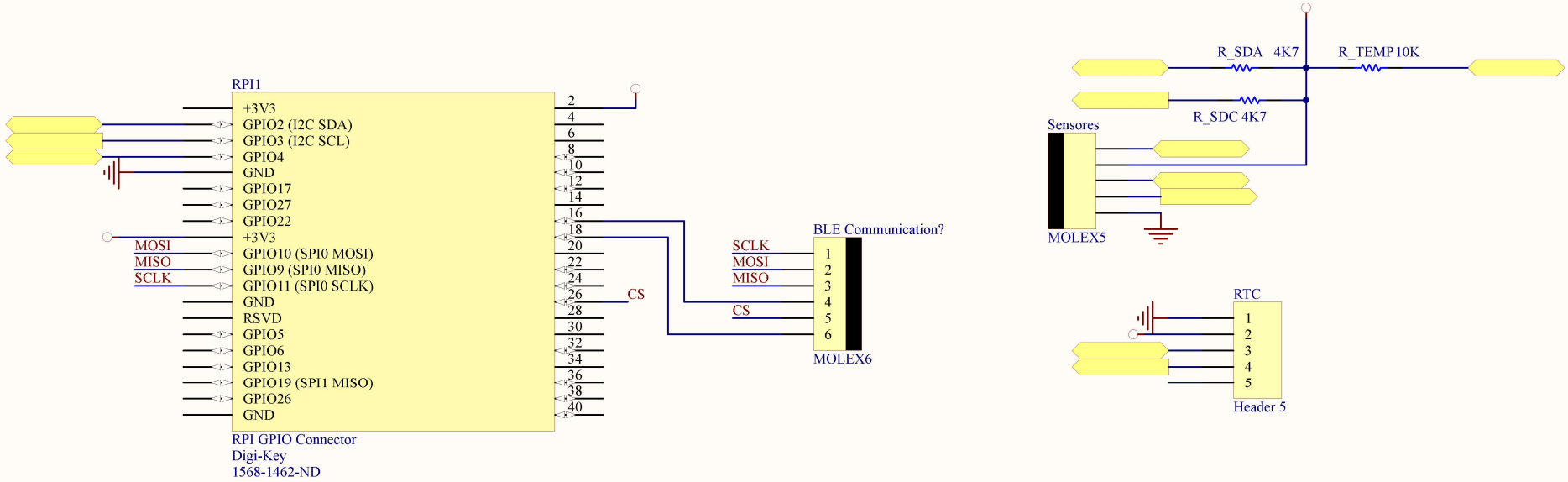
RPI1
+3V3
GPIO2 (I2C SDA)
GPIO3 (I2C SCL)
GPIO4
GND
GPIO17
GPIO27
GPIO22
+3V3
GPIO10 (SPI0 MOSI)
GPIO9 (SPI0 MISO)
GPIO11 (SPI0 SCLK)
GND
RSVD
GPIO5
GPIO6
GPIO13
GPIO19 (SPI1 MISO)
GPIO26
GND
MOSI
MISO
SCLK
CS
RPI GPIO Connector
Digi-Key
1568-1462-ND
BLE Communication?
SCLK
MOSI
MISO
CS
MOLEX6
R_SDA 4K7
R_TEMP 10K
R_SDC 4K7
Sensores
MOLEX5
RTC
Header 5