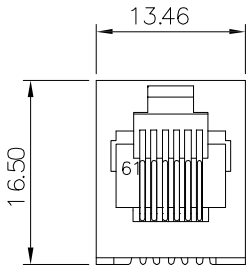


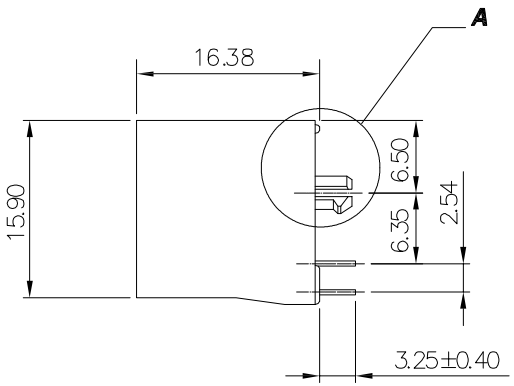


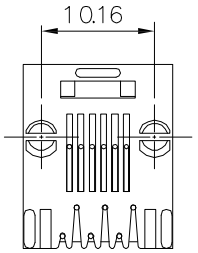


Specification:

1. Electrical Char
   Insulation Resistance: 500MΩ min. 500V DC
   for 1 minute
   Contact Resistance: 20mΩ max.
   Rating Current: 1.5A max.
   Rating Voltage: 120V AC
   Dielectric Voltage: 1000 Vrms at 1MA 60 sec. min.

2. Physical Char
   Housing: PBT Glass filled (UL 94V-0) Color: Black
   Soldering Temperature: 235°C for 5 sec.
   Spring Wire: 0.45mm Dia Phosphor Bronze
   6u" Gold plating over Nickel
   Temperature Range: -40°C to +85°C
   Durability: 500 mating cycles min.

3. Packing: Tray

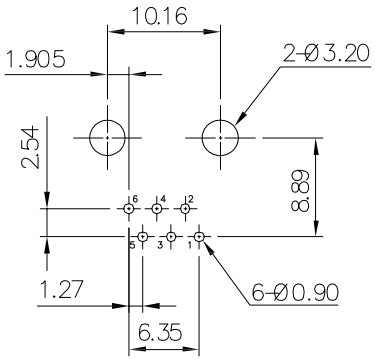


PCB LAYOUT
(Top View)

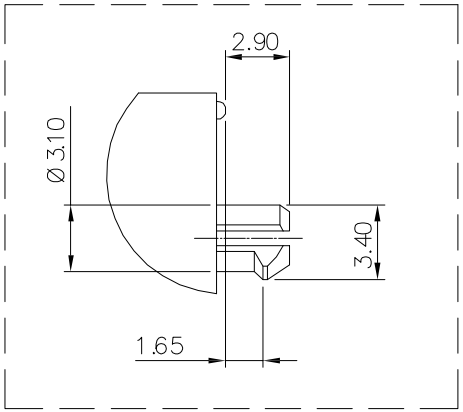


A(2:1)

**RoHS compliant**
Unit:mm

| | | | | | | | | | |
|---|---|---|---|---|---|---|---|---|---|
| Scale | Free | | | | | | Date | Name | Customer-No. |
| TOLERANCE | | | | | | Drawn | 12.06.2017 | Amy | |
| .XX | ±0.20 | | | | | Approved | 12.06.2017 | Amy | ASSMANN WSW-No. A-2014-1-4-N-T-R |
| .XXX | ±0.13 | | | | | | | | |
| .XXXX | ±0.05 | | | | | | | | Drawing-No. ASS 7328 CO rev00 |
| DIM | TOL | | | | | | | | |
| | | 0 | Drawn | 12.06.2017 | Amy | | | | |
| Angle | +0°30' | Id. | Modification | Date | Name | | | | Replace SHEET |

ASSMANN wsw components