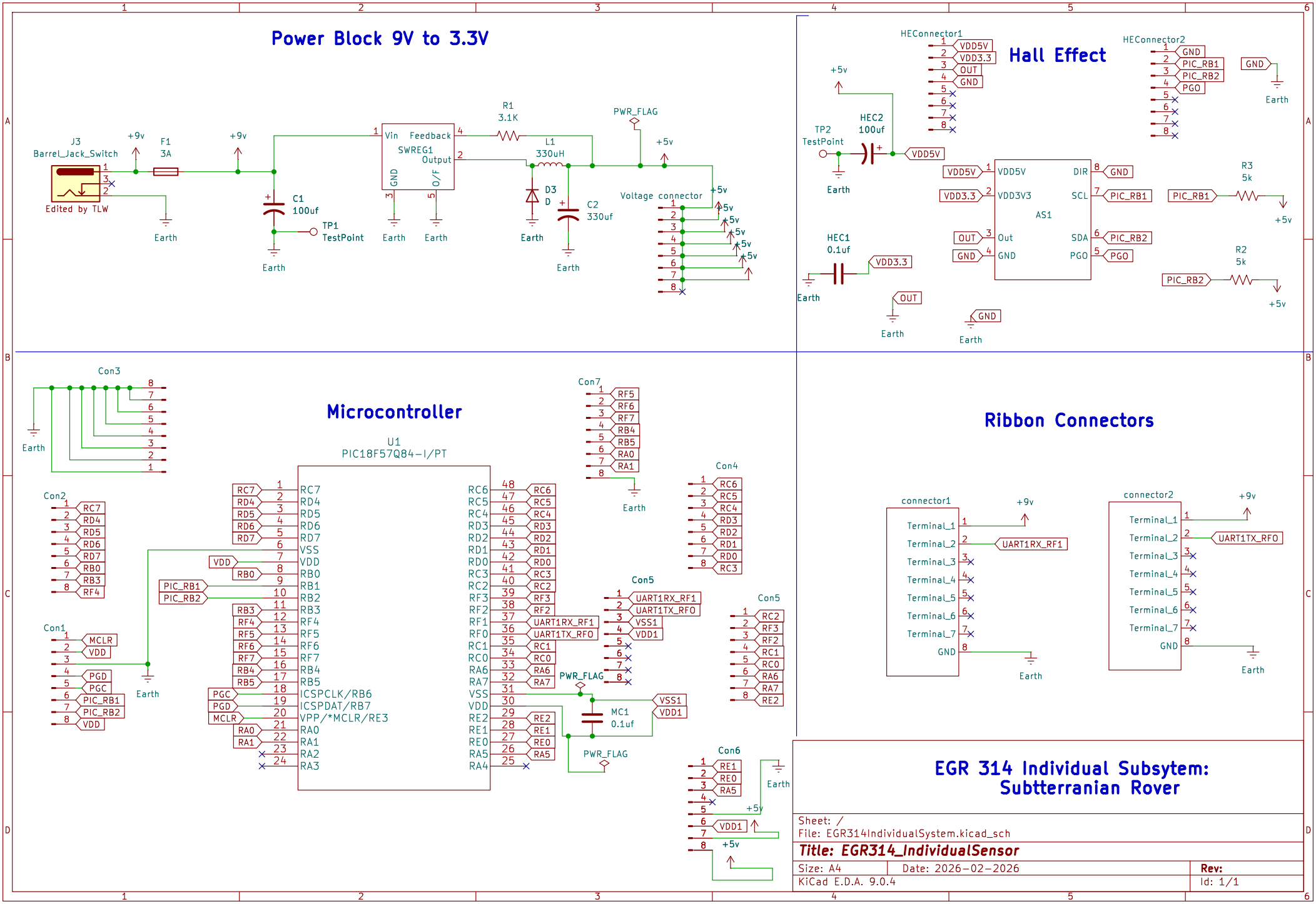
Power Block 9V to 3.3V
J3
Barrel_Jack_Switch
Edited by TLW
+9v
F1
3A
C1
100uf
TP1
TestPoint
Earth
SWREG1
Vin
Feedback
Output
GND
O/F
R1
3.1K
L1
330uH
D3
D
C2
330uf
PWR_FLAG
+5v
Voltage connector
Hall Effect
HEConnector1
VDD5V
VDD3.3
OUT
GND
HEConnector2
PIC_RB1
PIC_RB2
PGO
TP2
TestPoint
HEC2
100uf
HEC1
0.1uf
AS1
VDD5V
VDD3V3
Out
DIR
SCL
SDA
R3
5k
R2
5k
Microcontroller
U1
PIC18F57Q84-I/PT
Con3
Con2
Con1
Con7
Con4
Con5
Con6
MCLR
PGD
PGC
VDD
VSS
VSS1
VDD1
UART1RX_RF1
UART1TX_RFO
ICSPCLK/RB6
ICSPDAT/RB7
VPP/*MCLR/RE3
MC1
0.1uf
Ribbon Connectors
connector1
connector2
Terminal_1
Terminal_2
Terminal_3
Terminal_4
Terminal_5
Terminal_6
Terminal_7
GND
EGR 314 Individual Subsytem:
Subtterranian Rover
Sheet: /
File: EGR314IndividualSystem.kicad_sch
Title: EGR314_IndividualSensor
Size: A4
Date: 2026-02-2026
Rev:
KiCad E.D.A. 9.0.4
Id: 1/1