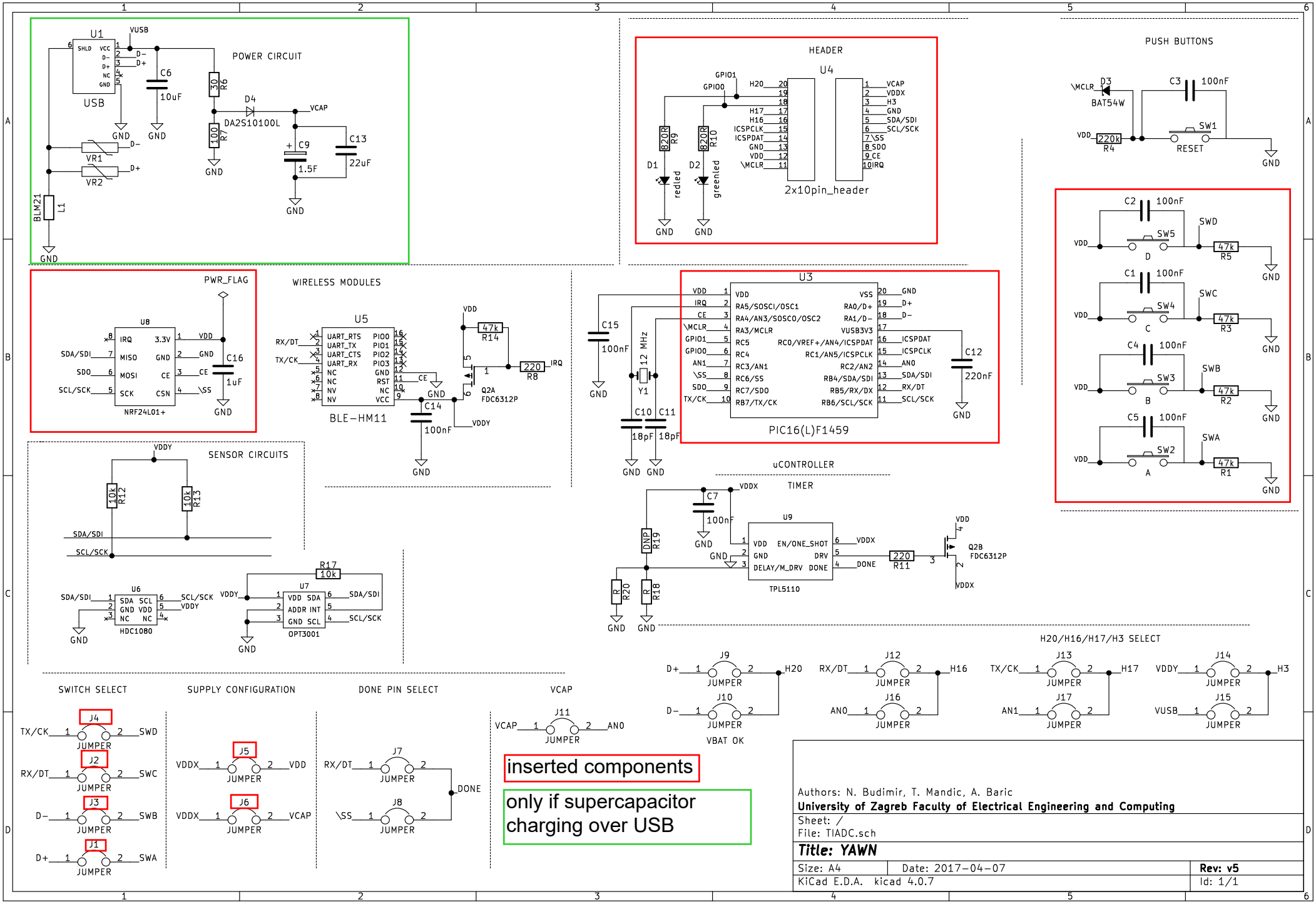

Authors: N. Budimir, T. Mandic, A. Baric

University of Zagreb Faculty of Electrical Engineering and Computing

Sheet: /

File: TIADC.sch

Title: YAWN

Size: A4	Date: 2017-04-07	**Rev: v5**
KiCad E.D.A. kicad 4.0.7		Id: 1/1