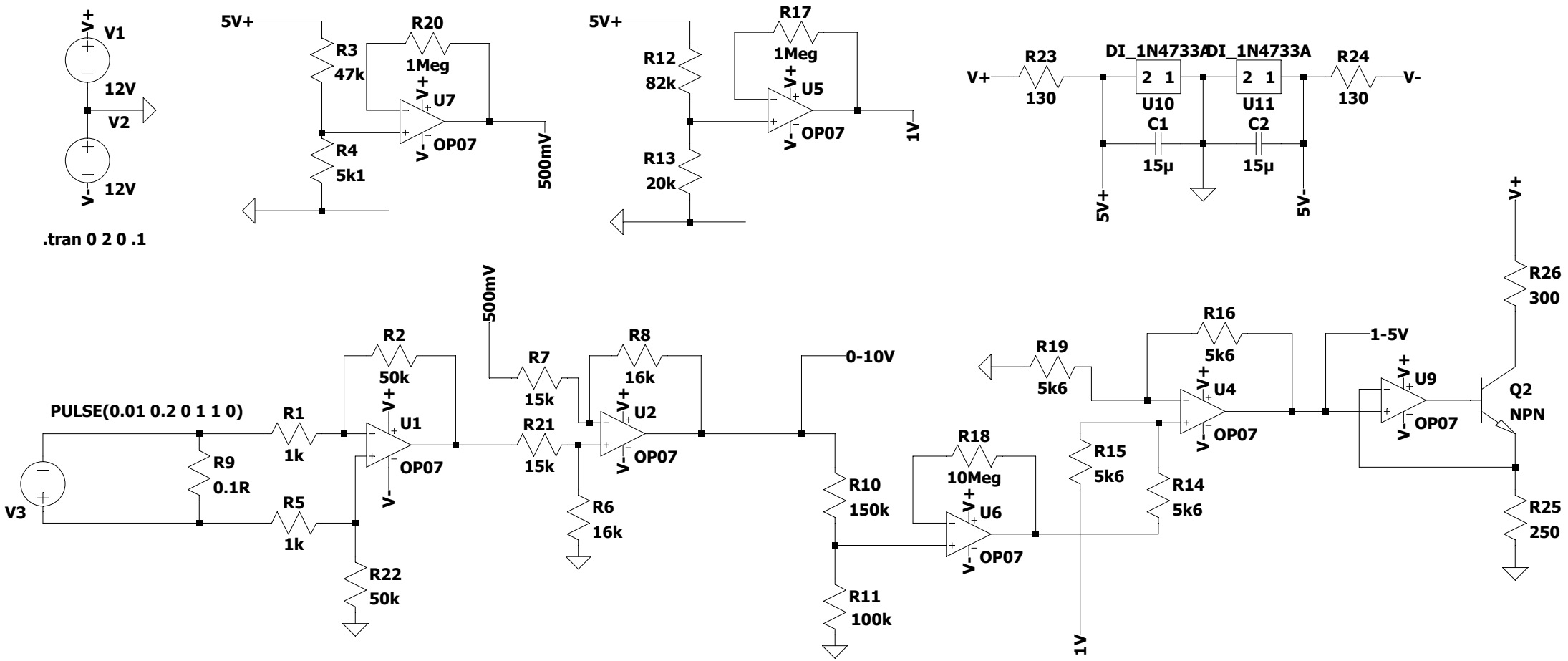

--- E:\GIT\Ammeter\IO_Miernik.asc ---