Algebra I

James A. Sellers, Ph.D.

THE GREAT COURSES®

PUBLISHED BY:

THE GREAT COURSES
Corporate Headquarters
4840 Westfields Boulevard, Suite 500
Chantilly, Virginia 20151-2299
Phone: 1-800-842-2412
Fax: 703-378-3819
www.thegreatcourses.com

Copyright © The Teaching Company, 2009

Printed in the United States of America

This book is in copyright. All rights reserved.

Without limiting the rights under copyright reserved above,
no part of this publication may be reproduced, stored in
or introduced into a retrieval system, or transmitted,
in any form, or by any means
(electronic, mechanical, photocopying, recording, or otherwise),
without the prior written permission of
The Teaching Company.

James A. Sellers, Ph.D.

Professor of Mathematics and Director of Undergraduate Mathematics
The Pennsylvania State University

Professor James A. Sellers is Professor of Mathematics and the Director of Undergraduate Mathematics at The Pennsylvania State University. From 1992 to 2001, he was a mathematics professor at Cedarville University in Ohio. Professor Sellers received his B.S. in Mathematics in 1987 from The University of Texas at San Antonio, the city in which he was raised. He received his Ph.D. in Mathematics in 1992 from Penn State. There he worked under the direction of his Ph.D. advisor, David Bressoud, and learned a great deal about the beauty of number theory, especially the theory of integer partitions. Professor Sellers has written numerous research articles on partitions and related topics; to date, more than 60 of his papers have appeared in a wide variety of peerreviewed journals. He is especially fond of coauthoring papers with his undergraduate students; his list of coauthors includes 8 undergraduates he has mentored during his career. Professor Sellers was privileged to spend the spring semester of 2008 as a visiting scholar at the Isaac Newton Institute at the University of Cambridge, pursuing further studies linking the subjects of partitions and graph theory.

Professor Sellers's teaching reputation is outstanding. He was named the Cedarville University Faculty Scholar of the Year in 1999, a distinct honor at that institution. After moving to Penn State, he received the Mary Lister McCammon Award for Distinguished Undergraduate Teaching from his department in 2005. One year later, he received the Mathematical Association of America Allegheny Mountain Section Award for Distinguished Teaching. Since then, he has received the Teresa Cohen Mathematics Service Award from the Penn State Department of Mathematics (2007) and the Mathematical Association of America Allegheny Mountain Section Mentoring Award (2009).

Professor Sellers has enjoyed many interactions at the high school and middle school levels. He served as an instructor of middle school students in the TexPREP program in San Antonio, Texas, for 3 summers. He worked with Saxon Publishers on revisions to a number of its high school textbooks in the 1990s. As a home educator and father of 5, he has spoken to various home education organizations about mathematics curricula and teaching issues.

Professor Sellers is well known as an entertaining and gifted speaker. He has spoken at numerous college, university, and high school venues about partitions and combinatorics. He has also spoken at conferences and seminars across the United States, sharing results related to his own research as well as his views on teaching and advising undergraduate students. ■

Table of Contents

INTRODUCTION

Professor Biography i
Scope 1

LECTURE GUIDES

LESSON 1
An Introduction to the Course 2

LESSON 2
Order of Operations 5

LESSON 3
Percents, Decimals, and Fractions 8

LESSON 4
Variables and Algebraic Expressions 11

LESSON 5
Operations and Expressions 14

LESSON 6
Principles of Graphing in 2 Dimensions 17

LESSON 7
Solving Linear Equations, Part 1 20

LESSON 8
Solving Linear Equations, Part 2 23

LESSON 9
Slope of a Line 26

LESSON 10
Graphing Linear Equations, Part 1 31

LESSON 11
Graphing Linear Equations, Part 2 38

LESSON 12
Parallel and Perpendicular Lines 42

LESSON 13
Solving Word Problems with Linear Equations 45

LESSON 14
Linear Equations for Real-World Data 48

LESSON 15
Systems of Linear Equations, Part 1 51

Table of Contents

LESSON 16
Systems of Linear Equations, Part 2 55

LESSON 17
Linear Inequalities 59

LESSON 18
An Introduction to Quadratic Polynomials 63

LESSON 19
Factoring Trinomials 65

LESSON 20
Quadratic Equations—Factoring 68

LESSON 21
Quadratic Equations—The Quadratic Formula 70

LESSON 22
Quadratic Equations—Completing the Square....74

LESSON 23
Representations of Quadratic Functions 78

LESSON 24
Quadratic Equations in the Real World 83

LESSON 25
The Pythagorean Theorem....86

LESSON 26
Polynomials of Higher Degree....89

LESSON 27
Operations and Polynomials....91

LESSON 28
Rational Expressions, Part 1 93

LESSON 29
Rational Expressions, Part 2 96

LESSON 30
Graphing Rational Functions, Part 1 99

LESSON 31
Graphing Rational Functions, Part 2 102

LESSON 32
Radical Expressions 106

LESSON 33
Solving Radical Equations.... 109

Table of Contents

LESSON 34
Graphing Radical Functions 112

LESSON 35
Sequences and Pattern Recognition, Part 1 116

LESSON 36
Sequences and Pattern Recognition, Part 2 118

SUPPLEMENTAL MATERIAL

Formula List 123
Solutions 124
Glossary 220
Bibliography 223

Algebra I

Scope:

This course is intended for students who have mastered the fundamentals of the operations of arithmetic involving integers and fractions and who wish to move forward in their understanding of problem solving via algebraic tools. The students will become familiar with the terminology and symbolic nature of first-year algebra and will understand how to represent various types of functions (linear, quadratic, rational, and radical) using algebraic rules, tables of data, and graphs. In the process, they will also become familiar with the types of problems that can be solved using such functions, with a particular eye toward solving various types of equations and inequalities. Additional topics, including the Pythagorean Theorem and sequences, will also be considered.

The following threads will be emphasized throughout the course:

- Multiple techniques to solve problems
- The need to recognize when a given technique can be utilized
- Various representations of mathematical data—algebraic rules, tabular data, graphs
- Pattern recognition. ■

An Introduction to the Course

Lesson 1

Topics in This Lesson:

- Course overview
- Signed numbers
- Absolute value
- Operations with signed numbers
- Fractions

Summary:

Welcome to *Algebra I*! We will cover a large number of topics throughout the year. One of the foundations for algebra is to understand signed numbers.

Signed numbers are the counting numbers, or natural numbers, 1, 2, 3, 4, 5,… combined with their negative counterparts −1, −2, −3, −4, −5,… and zero (0).

When we add two positive numbers, we get a positive answer. When we add two negative numbers, we get a negative answer. When we add or subtract two numbers whose signs are different, we subtract the smaller number from the larger number and give as our answer the sign of the larger number.

When we multiply or divide two numbers that have the same sign, positive or negative, our answer is positive. When we multiply or divide two numbers that have different signs, the answer is negative.

You can add and subtract fractions only if they have the same denominator. You can multiply and divide fractions that have different denominators. To divide a fraction, you invert the second fraction (flip it upside down) and multiply the two fractions together.

Definitions and Formulas:

Absolute value—the number that tells you how far away it is from zero. Another way to think of it is a number with no sign (plus or minus) in front of it.

Examples from the Lesson:

Divide:

$$\frac{8}{15} \div \frac{4}{9}$$

In order to divide a fraction, we flip the second fraction, multiply, and then reduce the result.

$$\frac{8}{15} \div \frac{4}{9}$$

$$= \frac{8}{15} \times \frac{9}{4}$$

$$= \frac{72}{60}$$

$$= \frac{36}{30}$$

$$= \frac{18}{15}$$

$$= \frac{6}{5}$$

Additional Examples:

Solve the following problems.

$(3)(-4)$

$2 + (-8)$

$15 \div (-5)$

$-10 + (-3)$

Answers:

$(3)(-4)$ Different signs when multiplying means a negative answer, so $(3)(-4) = -12$

$2 + (-8)$ When you add or subtract two numbers with different signs, you subtract the smaller from the larger and take the sign of the larger number for your answer. So $2 + (-8) = -6$

$-15 \div (-5)$ When you divide two numbers with the same sign, the answer is positive. $-15 \div (-5) = 3$

$-10 + (-3)$ When you add or subtract two numbers with the same sign, you add the numbers and give them the sign they both had. Therefore, $-10 + (-3) = -13$

Common Errors:

- Make sure to memorize the rules for signed numbers. The wrong sign on a number will make a problem incorrect.

Study Tips:

- If you are having trouble remembering the rules for signed number operations, make flashcards, a song, or a saying to help you to remember. Something as simple as, "Same signs, positive. Different signs, negative, when multiplying or dividing," can give you success.
- If you are shaky on basic math facts (addition, subtraction, multiplication, and division), algebra will be harder for you than it needs to be. Spend every day reviewing flashcards of math facts, and you will be surprised at how much better at math you are!

Problems:

Simplify the following.

1. $5 + (-2)$
2. $-4 + (-3)$
3. $-6 + 11$
4. $-9 + 7$

5. $(-3) \times 6$
6. $10 \times (-8)$
7. $(-2) \times (-9)$
8. $(-30) \div 6$
9. $45 \div (-5)$
10. $(-72) \div (-9)$

Order of Operations

Lesson 2

Topics in This Lesson:

- Order of operations

Summary:

There are rules we must follow when performing mathematical operations. These rules are called the order of operations. *Operations* is the general term for things like addition, subtraction, multiplication, and so on.

If the operation mentioned in the order of operations is not included in the problem we are given, we simply skip that step.

First we do all work in parentheses. Next we do the exponents. Multiplication and division are done next. Finally, the addition and subtraction are completed.

Definitions and Formulas:

Sum—the answer to an addition problem

Difference—the answer to a subtraction problem

Product—the answer to a multiplication problem

Quotient—the answer to a division problem

Exponent—a small number written to the upper right of a number, variable, or set of parentheses that tells how many times the number, variable, or parentheses should be multiplied by itself

The order of operations is as follows: parentheses, exponents, multiplication, and division (as they occur in the problem from left to right), addition, and subtraction (as they occur in the problem from left to right).

Examples from the Lesson:

$$10 \div 2 - 3 \times 5 + 7 \times 2$$

Using the order of operations, we do not simply start on the left and work our way to the right.

First we compute all the multiplications and divisions:

$$10 \div 2 - 3 \times 5 + 7 \times 2$$

$$= (10 \div 2) - 3 \times 5 + 7 \times 2$$

$$= 5 - 3 \times 5 + 7 \times 2$$

$$= 5 - (3 \times 5) + 7 \times 2$$

$$= 5 - 15 + 7 \times 2$$

$$= 5 - 15 + (7 \times 2)$$

$$= 5 - 15 + 14$$

Now that all the multiplications and divisions are computed, we perform the additions and subtractions from left to right.

$5 - 15 + 14$

$= (5 - 15) + 14$

$= -10 + 14$

$= 4$

Additional Examples:

Compute the following.

$7 + 3 \times 4 - (2 + 3)^2 + 6 \div 2$

We need to review our order of operations. What's first? Parentheses. All operations inside the parentheses should be completed first.

$7 + 3 \times 4 - (5)^2 + 6 \div 2$

What's next? Exponents. Any number that needs to be exponentiated (raised to a power) should be multiplied out.

$7 + 3 \times 4 - \mathbf{5 \times 5} + 6 \div 2$

$7 + 3 \times 4 - 25 + 6 \div 2$

What's next? Multiplication and division as they occur. That means, working from left to right, we do any multiplications and divisions we find. Sometimes it is easier to highlight the operations by putting parentheses around them.

$7 + \mathbf{(3 \times 4)} - 25 + \mathbf{(6 \div 2)}$

$7 + 12 - 25 + 3$

What's next? Addition and subtraction as they occur. That means that, working from left to right, we do any additions and subtractions we find.

$\mathbf{7 + 12} - 25 + 3$

$\mathbf{19 - 25} + 3$

$-6 + 3$

-3

Our answer is -3.

Common Errors:

- Do not try to solve long strings of number combinations in your head at first. Recopy the problem and pay careful attention to what is going on with the numbers.

Study Tips:

- You can remember the order of operations by the following sentence: **P**lease **E**xcuse **M**y **D**ear **A**unt **S**ally. The first letters of each word stand for an operation: parentheses, exponents, multiplication, division, addition, subtraction. You could also come up with your own memory tricks.

- Sometimes it is easier to highlight the operations by putting parentheses around them. Copy the problem on a piece of paper. Put parentheses around the thing you should do first. Solve it. Write the problem with the first step finished. Draw new parentheses to show the next step, and so on. For example, $5 + 3 \times 6$ would be written as $5 + (3 \times 6)$.

Problems:

Simplify the following.

1. $8 + 4 + 3 + 6 + 7 + 12$
2. $5 \times 3 \times 2 \times 4 \times 5$
3. $25 - 14 - 8 + 3$
4. $2 - 3 \times 5 + 4$
5. $18 - 5 \times 2 + 27 \div 3$
6. $5 + 3^2 - 6 \times 4$
7. $100 \div 2^2 \times 3 + 12$
8. $(4 + 8) + 3 \times 5$
9. $5 \times (9 - 3)^2$
10. $56 \div (11 - 4) + 2^3 \times 5$

Percents, Decimals, and Fractions

Lesson 3

Topics in This Lesson:

- Percents
- Decimals
- Fractions
- Conversion between percents, decimals, and fractions

Summary:

Percents, decimals, and fractions are all around us—from the amount of sales tax we pay to the grades we receive on exams. It is useful to be able to convert from one form to the other.

Definitions and Formulas:

Percent—a number followed by a percent symbol (%) that tells us what part of a hundred is represented. For example, 75% means "75 per 100."

Decimal—a number with a decimal point (.)

Fraction—two numbers separated by a division bar (—). The top number, or numerator, tells how many parts are represented. The bottom number, or denominator, tells how many parts make a whole.

Numerator—the top number in a fraction

Denominator—the bottom number in a fraction

How to convert from percents to fractions:

- Use the percent amount as the numerator (the top number) of the fraction.
- Always make the denominator (the bottom number) 100.
- Simplify the fraction if possible.

How to convert from percents to decimals:

- Take the percent amount, move the decimal point two places to the left, and remove the percent sign.

How to convert from fractions to decimals:

- Perform long division by dividing the denominator "into" the numerator. This means that the numerator goes into the division box and the denominator is outside the division box.

Examples from the Lesson:

Convert 40% to a fraction.

40% means 40 out of 100, so we write the fraction 40/100.

Then we simply reduce the fraction.

$$\frac{40}{100} = \frac{4}{10} = \frac{2}{5}$$

$$40\% = \frac{2}{5}$$

Convert 8% to a decimal.

We know that to convert from a decimal to a fraction, we move the decimal point two places to the left.

8% = .08 (move decimal point two places)

Note that here we have to insert an extra zero (0) in the expression to give us the correct answer. .8 means 80%. .08 is 8%.

Additional Examples:

Convert $\frac{7}{8}$ to a decimal.

To convert from a fraction to a decimal, we put the numerator inside the division box and the denominator outside.

$$8\overline{)7}$$

Now, we divide until we get a final answer or repeating decimal.

$$\begin{array}{r} 0.875 \\ 8\overline{)7.000} \end{array}$$

Common Errors:

- Be sure that you use a zero as a place holder when you are converting from percents to decimals if there are fewer than two digits in the percent.

Study Tips:

- If you forget how many places to move the decimal point when converting from a percent to a decimal, just think of how many zeroes are in 100. A percent is how many out of 100. We move the decimal point two places, one time for each zero, when we convert.
- A trick to remember which number is inside the division bar when converting from a fraction to decimal is to think of the numerator falling from the top of the fraction into the box (the division bar).
- Another trick is to remember the order is denominator, division bar, numerator. These are in alphabetical order.

Problems:

Convert the following to a fraction, or mixed number.

1. 45%
2. 8%
3. 200%
4. 0.48
5. 12.8

Convert the following to a decimal.

6. $\frac{4}{5}$
7. $\frac{16}{6}$
8. 87%
9. 3%
10. 5,678%

Variables and Algebraic Expressions

Lesson 4

Topics in This Lesson:

- Definitions: algebraic expression, variable, equation
- How to translate words into an algebraic expression
- How to translate a word problem into an equation

Summary:

One thing that makes algebra different from arithmetic is that algebra uses variables. These variables are used with operation symbols and numbers to create algebraic expressions and equations that will help to solve mathematical problems.

In order to create an algebraic expression from words, the variable must first be determined. These algebraic expressions can be combined to form equations that can then be solved to find out the value of each variable.

Definitions and Formulas:

Algebraic expression—a combination of mathematical symbols that might include numbers, variables, and operation symbols

Variable—some sort of symbol, usually a letter from the alphabet, that represents one or more numbers in an algebraic expression

Equation—a mathematical sentence that uses or includes an equals sign "="

Examples from the Lesson:

Translate "The number of boys in the class is two-fifths of the number of students in the class."

First define the variables. There are two unknown amounts in the problem—the number of boys in the class and the number of students in the class.

B = the number of boys in the class

S = the number of students in the class

Translate the English sentence into an equation:

"The number of boys in the class" is B.

The word *is* means the equals sign "=."

So we start with B = something.

The right-hand side of the equation comes from "two-fifths of the number of students in the class." Since "the number of students in the class" is S, we are looking at 2/5 of S.

"Of" means multiplication. So "2/5 of S" translates to $(2/5)S$.

Therefore, the equation is $B = (2/5)S$.

Additional Examples:

Jesse's father is three times as old as Jesse. Write an equation to show Jesse's father's age.

First determine the variables. There are two unknowns, Jesse's age and his father's age.

J = Jesse's age

F = Father's age

We know that Jesse's father is three times as old as Jesse. That means we need to multiply one of the variables by three. But which one? F is the father's age. J is Jesse's age. We need to multiply Jesse's age by three to get the father's age. So three times J will equal F.

$F = 3J$

Common Errors:

- It is easy to make a mistake when writing an algebraic expression if you do not understand what each variable represents. Be sure that you are clear as to what each letter stands for.
- When dividing, the number that comes first in the word problem (the quotient of x and y) is the one that goes in the numerator (on top of the fraction—x/y).

Study Tips:

- Become familiar with the words for mathematical operations: sum, difference, quotient, product, and so on.
- Choosing what letter to use for a variable can be confusing. Just pick a letter that makes sense to you and makes the problem easier to solve. If you've got sloppy handwriting, avoid letters that look like numbers (S, lowercase L).
- Writing down on your paper what each variable represents will help you to keep things clear.

How to Check Problems:

When you have written your equation, translate it into words to see if it makes sense and that you wrote an equation that represents the problem you are trying to solve. Using our previous example, if we had written $J = 3F$, reading it as words, "Jesse's age equals three times the father's age," would have shown our error. If you cannot translate your equation into words, go back and make sure that you understand what your variables represent.

Problems:

Translate the following into algebraic expressions.

1. Four more than eight times m
2. The difference of two times x and 10
3. 17 less than x
4. Three times the sum of x and 12
5. The quotient of the square root of t and nine

Translate the following into equations.

6. The perimeter of the rectangle is the sum of two times the length of the rectangle and two times the width of the rectangle.
7. The number of three-pointers made is six more than the number of free throws made.
8. The number of customers on a Saturday is three times the number of customers on a Monday.
9. The tip for the meal is 18% of the bill.
10. The volume of the box is the product of the length of the box, the width of the box, and the height of the box.

Operations and Expressions

Lesson 5

Topics in This Lesson:

- Simplifying algebraic expressions
- Evaluating algebraic expressions by plugging in a number
- Adding, subtracting, multiplying, and dividing terms

Summary:

Evaluating an expression simply means that a number replaces the variable. Whatever is done to the variable (multiplication, addition, etc.) is then done to the number. This allows us to know the value of the expression for that number.

When adding or subtracting algebraic expressions, only like terms can be combined. This means that the variables of the two terms are identical. However, when multiplying or dividing algebraic expressions, the terms do not have to be identical.

Definitions and Formulas:

Evaluate—plug in numbers to determine the value of the expression

Examples from the Lesson:

Plugging in values for variables:

Evaluate $(ab)^2$ and ab^2 for $a = 3$ and $b = 4$.

We begin with $(ab)^2$. Using $a = 3$ and $b = 4$, we have

$$(ab)^2$$
$$= (3 \cdot 4)^2$$
$$= 12^2$$
$$= 144$$

Next, ab^2

$$= 3 \cdot 4^2$$
$$= 3 \cdot 16$$
$$= 48$$

Combining Expressions:

Simplify $5a^2 + 3a^2 - 6a^2 + 8(ab)^2$.

$$5a^2 + 3a^2 - 6a^2 + 8(ab)^2$$
$$= (5a^2 + 3a^2) - 6a^2 + 8(ab)^2$$
$$= 8a^2 - 6a^2 + 8(ab)^2$$
$$= 2a^2 + 8(ab)^2$$
$$= 2a^2 + 8a^2b^2$$

Additional Examples:

Simplify the following expression.

$$16x^3y^3 \div 8xy + 3x^2y - 10yx^2 + 5x^2y^2$$
$$(16x^3y^3 \div 8xy) + 3x^2y - 10yx^2 + 5x^2y^2$$
$$(2x^2y^2) + 3x^2y - 10yx^2 + 5x^2y^2$$
$$2x^2y^2 + 3x^2y - 10x^2y + 5x^2y^2$$
$$2x^2y^2 - 7x^2y + 5x^2y^2$$
$$2x^2y^2 + 5x^2y^2 - 7x^2y$$
$$7x^2y^2 - 7x^2y$$

Common Errors:

- Make sure that when adding and subtracting expressions, only like terms are added. See if you can rearrange the variables to make the terms identical. For example, $3a^2b$ and $3ba^2$ are the same term, since we can rearrange the variables as they are being multiplied together.
- Use the order of operations. If you do not, you will make mistakes.
- Don't forget parentheses! Everything inside the parentheses should be raised to a power or multiplied, not just one term.
- When dividing expressions with exponents, subtract the exponents of like terms.

Study Tips:

- If you have to plug in a number to an expression, put a set of parentheses in place of the number before you insert the number. This will allow you to see what needs to be done to the number more easily.

  $3x^2$

  $3(\ )^2$

- When combining a large number of expressions, rewrite the list so that the like terms are next to each other. Make sure not to change the sign in front of each term, though.

Problems:

1. Evaluate the expression $(x-4)^2 + 5x^2$ when $x = -3$.
2. Evaluate the expression $(x-4)(x+3)^2 - 6x^3$ when $x = -1$.

Simplify the following.

3. $14x^4y^2 - 8y^2x^4 + 5x^2y^4 - 2(xy^2)^2$
4. $17a^3a^2 + 13(a^3)^2 - 8a^2a^4 + 10a^7a^{-2}$
5. $(x^2 \cdot y^7 \cdot z^3)(x^9 \cdot y^4 \cdot z^2)$
6. $(3x^0 \cdot y^{-7} \cdot z^5)(6x^4 \cdot y^{-1} \cdot z^3)$
7. $(5x^2 \cdot y^{-5} \cdot z^5)(3x^4 \cdot y^{-1} \cdot z^3)(8x \cdot z^{-8})$

8. $\dfrac{a^{10}b^{17}}{b^4a^8}$

9. $\dfrac{63y^9z^8}{21y^4z^8}$

10. $\dfrac{24x^{-4}y^{-9}z^8}{18xy^{-2}z^{-3}}$

Principles of Graphing in 2 Dimensions

Lesson 6

Topics in This Lesson:

- Graphing in the Cartesian plane
- History of the Cartesian plane
- Ordered pairs

Summary:

The Cartesian plane or *xy*-plane is formed by the intersection of an *x*-axis and a *y*-axis. The *x*- and *y*-axes are two number lines that intersect at point 0 and go infinitely in both positive and negative directions. Points can be graphed in this plane using an ordered pair. The ordered pair is a set of two numbers, the first of which identifies the location of the point in relation to the *x*-axis, and the second of which identifies the location of the point in relation to the *y*-axis. The location of points can also be determined by their location in one of four quadrants of the Cartesian plane.

Definitions and Formulas:

Cartesian plane or *xy*-plane—the plane or two-dimensional space formed by two number lines, one horizontal and one vertical, so that they intersect at right angles

***x*-axis**—the horizontal number line or horizontal axis

***y*-axis**—the vertical number line or vertical axis

Origin—the point at which the axes intersect

Quadrants—the Cartesian plane is divided into four quadrants by the intersection of the *x*- and *y*-axes. They are called Quadrants I, II, III, and IV. Quadrant I is the upper right section. Quadrant II is the upper left section. Quadrant III is the lower left section. Quadrant IV is the lower right section.

***x*-coordinate or abscissa**—a number that shows where a point on a graph is located in relation to the *x*-axis

***y*-coordinate or ordinate—**a number that shows where a point on a graph is located in relation to the *y*-axis

Ordered pair—a set of two numbers inside parentheses that are separated by a comma. The first number represents the *x*-coordinate, or abscissa, and the second number represents the *y*-coordinate, or ordinate, on a graph.

Examples from the Lesson:

Plot (3, −4).

Start with the x-coordinate, 3. It is positive, so we move to the right of the origin three units. The y-coordinate is −4. Since it is negative, we must move *down* four units. That means our point is in Quadrant IV.

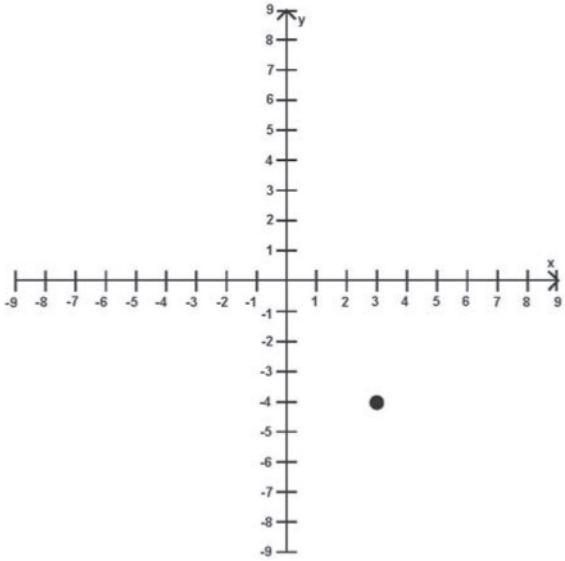

Additional Examples:

Plot the following three points and tell in which quadrant they lie.

(0, 5), (−3, −2), and (−4, 1)

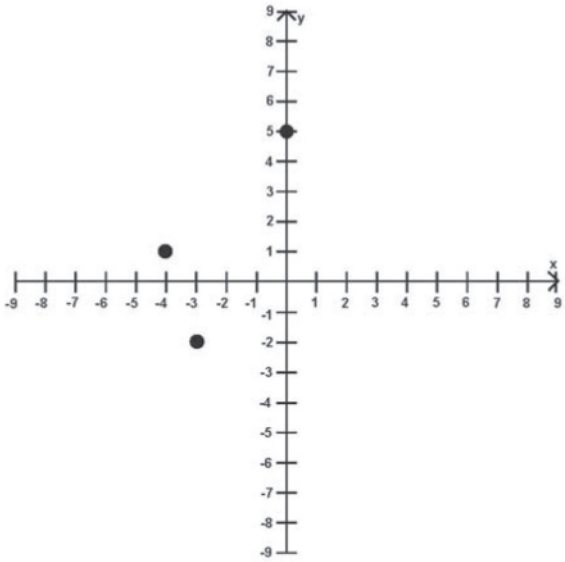

(0, 5)—As this point lies on an axis, it is not in a quadrant.

(−3, −2)—This point lies in Quadrant III (remember that the quadrants are labeled counterclockwise).

(−4, 1)—This point lies in Quadrant II.

Common Errors:

- The first number in the ordered pair is *always* the x-coordinate. The order of the x- and y-coordinates cannot be switched.
- The numbering of the quadrants goes counterclockwise starting with the upper right-hand quadrant and moving to the left.
- If a point lies on the x-axis or y-axis, it does not lie in a quadrant.

Study Tips:

- Graphing is much easier with graph paper. Invest in paper that has grid squares large enough to be able to graph points effectively.
- Neatness counts! Make sure your x- and y-axes are straight lines, that the numbers on your axes are small and easy to read, and that the dots identifying points are clear and easy to see.

Problems:

Plot each of the following points on a set of axes. Also state the quadrant in which each point is located.

1. (5, −3)
2. (−8, 4)
3. (−2, −1)
4. (0, 7)
5. (4, 6)
6.–10. Determine the coordinates for each of the points plotted here.

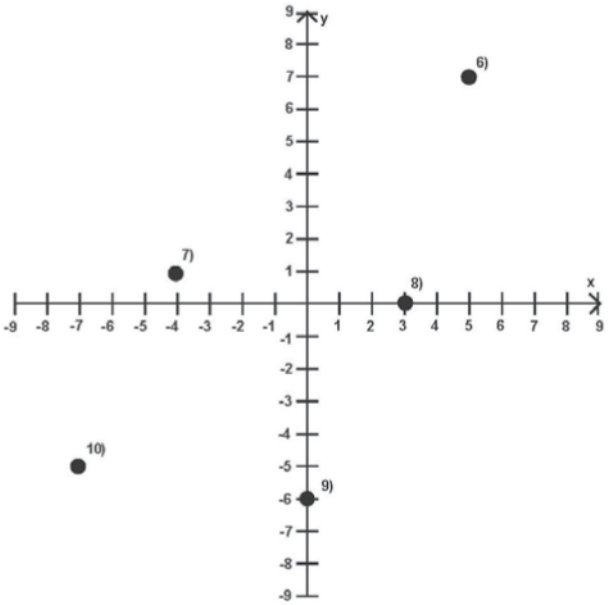

Solving Linear Equations, Part 1

Lesson 7

Topics in This Lesson:

- Solving one-step equations
- Solving two-step equations
- Substituting to see if the equation was solved properly

Summary:

A linear equation is the equation of a line. If we want to solve the equation or find solutions to this equation, it means that we want to find a value or values that make the equation true. The way to solve an equation is to get the variable on one side of the equals sign by itself and the numbers all combined into one number on the other side. The way that you move numbers to the other side of the equation is to perform the opposite operation on both sides of the equation. For example, if you had +4 on one side of the equation, subtracting 4 from both sides of the equation would eliminate the number from one side and place it on the other.

A one-step equation only needs one step to solve it. For example, only addition or division might be needed to solve it. A two-step equation needs two steps to solve. Combining like terms and division are typical examples of what might be needed in a two-step equation.

In order to make sure that the equation was solved correctly, substitute your answer back in to the original equation and simplify. If both sides of the equation are equal, you have the correct answer.

Definitions and Formulas:

Solution of an equation—the value of the variable that makes the equation true

One-step equation—an equation that takes only one step to solve

Two-step equation—an equation that takes two steps to solve

Examples from the Lesson:

Solve $x - 5 = 17$

$$\begin{array}{r} x - 5 = 17 \\ \underline{+5 \quad +5} \\ x = 22 \end{array}$$

Check the solution to see if the equation was solved correctly.

$x - 5 = 17$

$22 - 5 = 17$

$17 = 17$

Additional Examples:

Solve $6x + 5 = -4x$.

First we must get the like terms to one side. We do this by subtracting $6x$ from both sides of the equation.

$$\begin{array}{r} 6x + 5 = -4x \\ -6x \quad -6x \\ \hline 5 = -10x \end{array}$$

Next we need to get the variable, x, by itself. Since x is being multiplied by -10, we need to do the opposite operation, division, to get the x by itself.

$$\frac{5}{-10} = \frac{-10x}{-10}$$

$$-\frac{5}{10} = x$$

$$-\frac{1}{2} = x$$

Our answer is $-1/2$. Let's plug this value into the original equation to see if we got the correct answer.

$$6x + 5 = -4x$$

$$6\,(-1/2) + 5 = -4\,(-1/2)$$

$$-3 + 5 = 2$$

$$2 = 2$$

Our solution is correct.

Common Errors:

- Pay careful attention to the signs of numbers when you are solving equations.
- Make sure that the operation you choose will actually undo what is being done to the variable. For example, if you have $5x$, you cannot subtract 5 to get the x by itself.
- If you move all the variables and numbers to one side of the equation, the other side of the equation will be zero. You need to balance the equation with all numbers on one side and variables on the other.

Study Tips:

- When solving one-step equations, look for the opposite function—if you've got multiplication in the problem, do the opposite—divide. Got addition? Do subtraction.

Problems:

1. Show that $x = 4$ is a solution of the equation $2x - 5 = 3$.
2. Show that $x = -5$ is a solution of $12x + 78 = 18$.
3. Solve $t - 9 = 14$.
4. Solve $x + 8 = -29$.
5. Solve $y - 11 = -53$.

6. Solve $3x = 72$.

7. Solve $\frac{5}{7}x = 20$.

8. Solve $6x - 7 = 47$.

9. Solve $\frac{y}{2} + 14 = -12$.

10. Solve $-\frac{2}{3}x - 7 = 12$.

Solving Linear Equations, Part 2

Lesson 8

Topics in This Lesson:

- Solving complex linear equations

Summary:

Solving more complex linear equations is not that much different than solving one-step or two-step equations. We simply use more steps. The first thing to do is to get all the terms with the variable to the same side of the equation and combine like terms. Next get all the numbers to the other side of the equation. Finally, get the variable by itself. This is usually done by dividing by the coefficient (the number in front of the variable).

Some equations are not true for any value and have no solution. Some equations are true for all values, and these equations are called *identities*.

Definitions and Formulas:

Identity—an equation that is true for every possible value of the variable

Examples from the Lesson:

Solve $-3\,(a + 5) = 12$.

We need to get the variable a by itself on one side of the equals sign. How do we do so?

The first thing to do is to get rid of that −3. How? It is being used to multiply, so we do the opposite function, we divide both sides by −3.

$$\frac{-3(a+5)}{-3} = \frac{12}{-3}$$

That leaves us with a + 5 = −4.

(Remember: When you divide a positive number by a negative number, the sign of the result is negative because the two signs you started with were different.)

Now we have $a + 5 = -4$. We need to get rid of the 5.

$$\begin{array}{r} a + 5 = -4 \\ -5 \quad -5 \\ \hline a = -9 \end{array}$$

It appears that our solution is −9. Let's check.

$3\,(a + 5) = 12$

$3\,(-9 + 5) = 12$

$3\,(-4) = 12$

$12 = 12$

Additional Examples:

Solve $-4a + 7 = -9 + 4a$.

First we need to get all the variables on one side of the equation and all the numbers to the other. We do this by adding $+4a$ to both sides.

$$\begin{array}{r} -4a + 7 = -9 + 4a \\ +4a \quad +4a \\ \hline 7 = -9 + 8a \\ +9 \quad +9 \\ \hline 16 = 8a \end{array}$$

And then we add 9 to both sides.

To get the variable by itself, we need to divide both sides by 8.

$$\frac{16}{8} = \frac{8a}{8}$$
$$2 = a$$

Let's check this solution by plugging it back in to the original equation.

$$-4a + 7 = -9 + 4a$$

$$-4(2) + 7 = -9 + 4(2)$$

$$-8 + 7 = -9 + 8$$

$$-1 = -1$$

The solution is correct!

Common Errors:

- Make sure that when you do something to one side of the equation, you do the exact same thing to the other side.
- Pay attention to signs. Accidentally forgetting to write a minus sign will give you a wrong answer.
- Remember, when you multiply or divide, if the signs are the same, the answer is positive. If the signs are different, the answer is negative. However, with addition and subtraction, you should always subtract the smaller number from the larger number and take the sign of the larger number.

Study Tips:

- Checking your work is the primary, number one insurance policy for accurate work. It is a step that separates good students from superstar students.
- When you get an answer, consider if it is reasonable given the information you have.

Problems:

1. Solve $2x + 14 + 7x = 5$.
2. Solve $\frac{1}{2}x + \frac{2}{3}x = 14$.
3. Solve $5(t + 3) = 35$.
4. Solve $-7(x - 4) = 63$.
5. Solve $4y - 13 = -8y + 11$.

6. Solve $-3x + 47 = 5x + 103$.
7. Solve $-7x + 20 = -3x + 100$.
8. Solve $3(7x - 8) = 7(3x + 2)$.
9. Solve $6(7x + 14) = 7(6x + 12)$.
10. Your little brother wants to set up a lemonade stand this weekend. It's going to cost \$7 to get everything set up and then it will cost about 15 cents per cup to make. Your little brother wants to sell the lemonade for 50 cents per cup. How many cups will have to be sold in order to break even?

Slope of a Line

Lesson 9

Topics in This Lesson:

- Defining *slope*
- Determining slope from a graph
- Determining slope from two points on a line
- Negative and positive slope
- Slope of horizontal and vertical lines

Summary:

The slope of a line describes how "steep" or "flat" a line is. The slope is usually expressed as a fraction and shows how quickly the vertical amount changes as the horizontal amount changes. The greater the value of the slope, the steeper the line. A horizontal line has a slope of 0, as there is no change in the vertical distance in relation to the horizontal distance.

Slope can be determined in a number of ways. One way is to observe a graph of the line and draw in two line segments that make the legs of a rectangle with the original line bisecting it. The length of the horizontal line segment becomes the *run*, and the length of the vertical line segment, the *rise*. Since slope is rise/run, the slope can be determined.

Another way to determine slope is to take any two points (x_1, y_1) and (x_2, y_2) on the line and plug them in to a formula, $(y_2 - y_1) / (x_2 - x_1)$. This formula also gives the slope.

Positive slope means that the line is going "uphill" from left to right. Negative slope means the line is going "downhill" from left to right. A horizontal line always has a slope of 0. A vertical line's slope is always undefined.

Definitions and Formulas:

Slope—the "rate of change" of a vertical line that is defined as follows:

Slope = (vertical change of the line) / (horizontal change of the line)

This can also be thought of as "rise over the run" of the line, where the rise refers to the amount of "vertical change" and the run is the "amount of horizontal change" or "the change in y over the change in x." Slope is often represented as a fraction.

How to find slope using two points: $(y_2 - y_1) / (x_2 - x_1)$

where (x_1, y_1) and (x_2, y_2) are the coordinates of two points on the line.

Examples from the Lesson:

Find the slope of the following line.

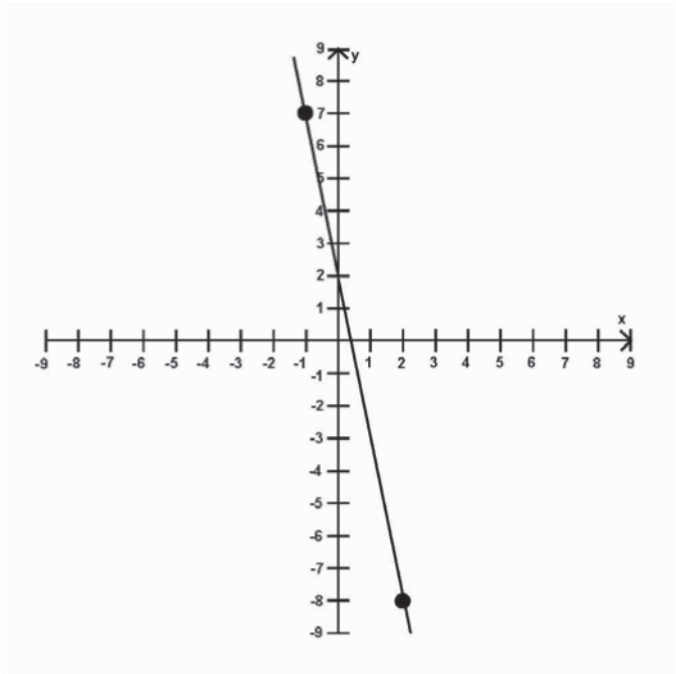

First find the coordinates of the two points on the line. They are (−1, 7) and (2, −8). Use those two points to find the slope of the line.

Slope = rise over run = $(y_2 - y_1) / (x_2 - x_1)$

$= (-8 - 7) / (2 - (-1))$

$= -15 / (2 + 1)$

$= -15 / 3$

$= -5$

Additional Examples:

Find the slope of a line using these two points: (4, −3) and (9, 7).

Using our formula, we plug in the values.

Slope = rise over run = $(y_2 - y_1) / (x_2 - x_1)$

$= [7 - (-3)] / (9 - 4)$

$= 10/5$

$= 2/1$

$= 2$

Common Errors:

- Do not mix up coordinates when plugging them into the slope formula.
- Slope is always rise over run. Since the y-values show vertical change, they always come first.

Study Tips:

- It does not matter which point you choose as x_1 and y_1. As long as you make the other point x_2 and y_2, you will get the same answer.
- It may help to label the points before placing them into the formula. Writing small x_1, x_2, y_1, and y_2 above the numbers will help you to keep track of where they go.
- If you get confused as to whether it is "rise over run" or "run over rise," remember that the words come in alphabetical order. RISE comes before RUN.

Problems:

1. Find the slope of the following line.

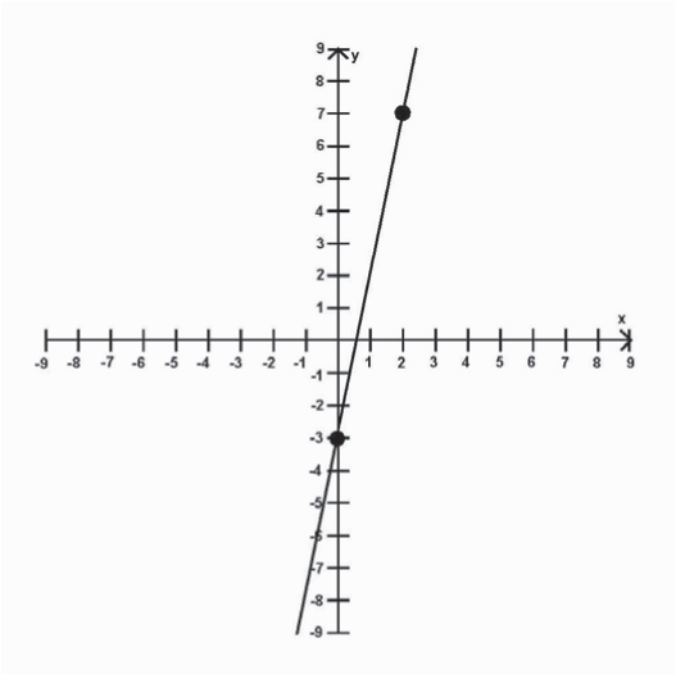

2. Find the slope of the following line.

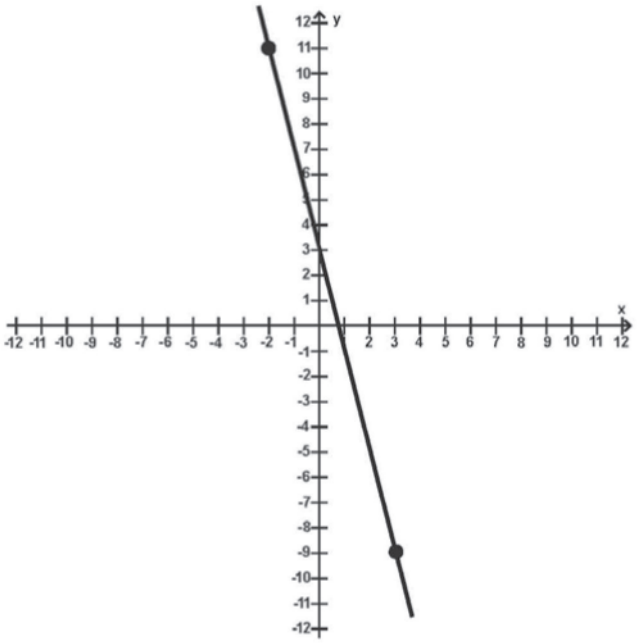

3. Find the slope of the following line.

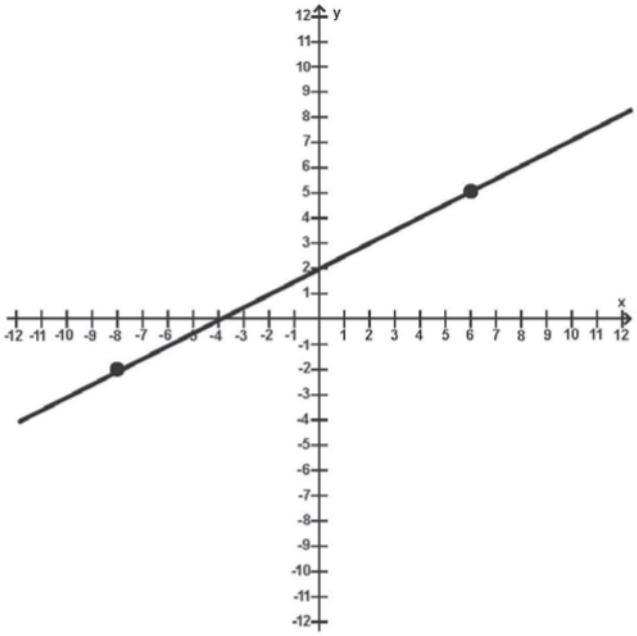

4. Find the slope of the following line.

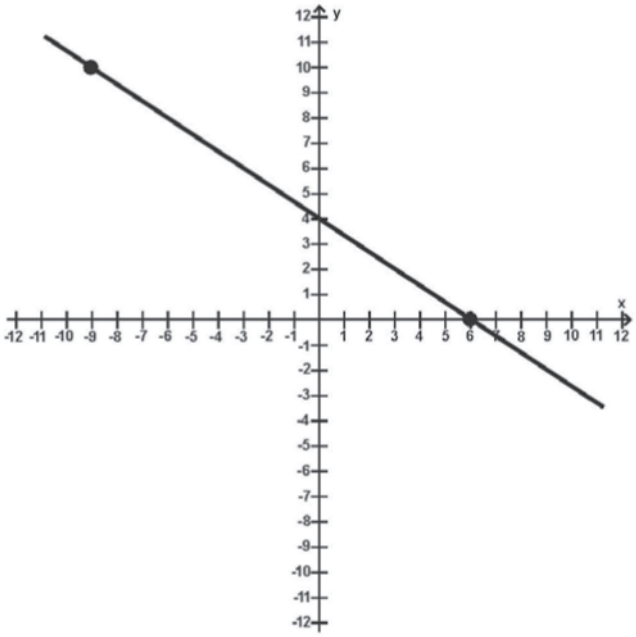

5. Find the slope of the following line.

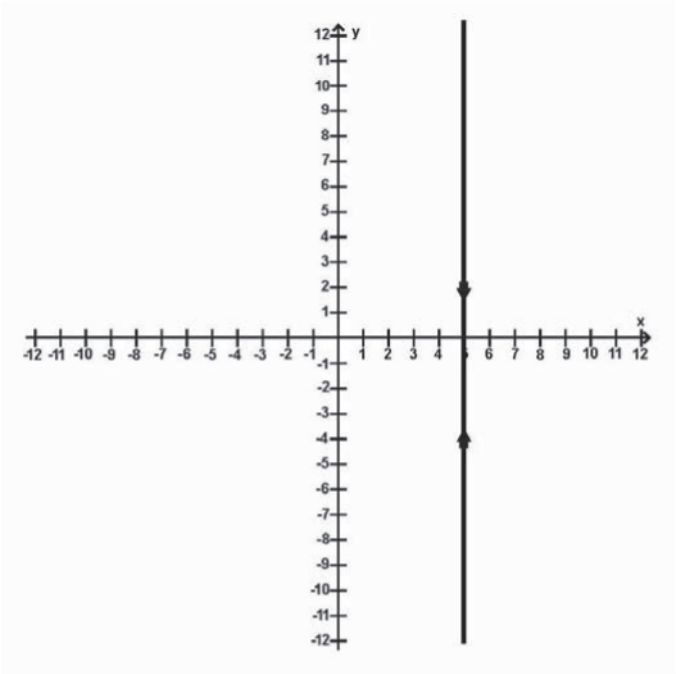

6. Find the slope of the line through the points (7, 10) and (3, −8).
7. Find the slope of the line through the points (−2, −5) and (13, 7).
8. Find the slope of the line through the points (−4, 15) and (10, −13).
9. Find the slope of the line through the points (3, 3) and (10, 423).
10. Find the slope of the line through the points (13, −12) and (8, −12).

Graphing Linear Equations, Part 1

Lesson 10

Topics in This Lesson:

- Slope-intercept form of a line
- Drawing graphs based on the slope-intercept form

Summary:

Algebra is not just about variables and equations. Linear equations represent the graphs of lines. One of the simplest ways to write the equation of a line is to use the slope-intercept formula. This formula shows the slope of a line and where it intersects the y-axis. When you plug in values for x and solve, you will find the y-value for that ordered pair.

If you see a slope-intercept equation that is missing the x-term, you know that the line is horizontal.

Definitions and Formulas:

Slope-intercept form of a line: $y = mx + b$

where m = slope of the line and b = y-intercept of the line (the place where the line crosses the y-axis)

Examples from the Lesson:

Determine the slope-intercept form of the equation of this line.

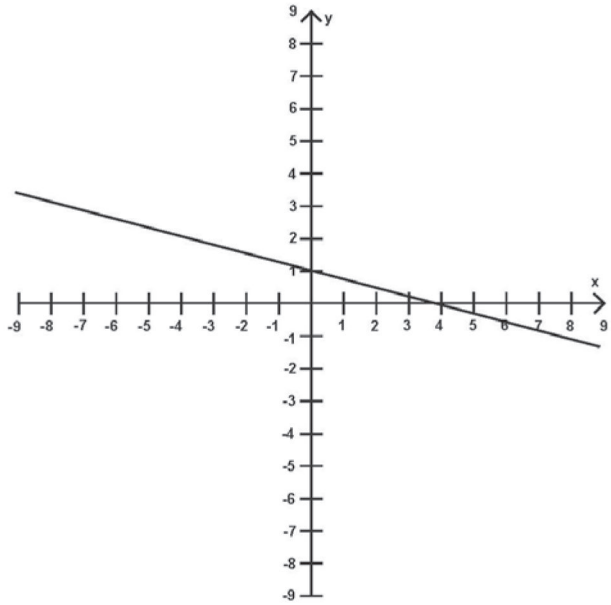

First find the y-intercept. It is $b = 1$. We can tell that the slope must be negative, as the line goes "downhill" from left to right. The slope also must be a small number since the line is somewhat flat.

Let's calculate the slope. We need to have two points on the line, and the two points we use are (4, 0) and (0, 1). When we plug these into our slope formula, we get:

$$m = (1 - 0) / (0 - 4) = 1 / -4 = -(1/4)$$

The slope is indeed negative and small. Now, take the value of the slope and plug it into the slope-intercept form of the equation:

$$y = -(1/4)x + 1$$

Additional Examples:

Sketch the graph of the equation $y = 3x + 5$.

Since we are graphing, we can draw our first point, the y-intercept. It is the b in the slope-intercept form. In this case, it is +5. Therefore, the point is (0, 5).

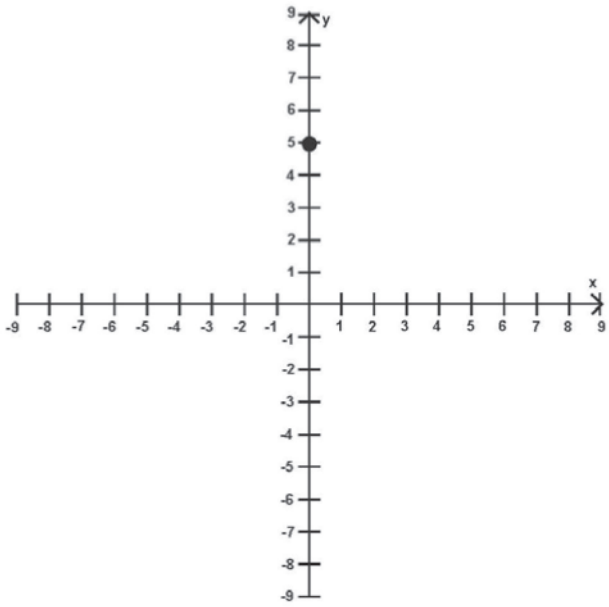

Now we just need one more point in order to sketch the line, as we need two distinct points to define a unique line. We can use the slope-intercept formula to find another point. There are two ways to do this. One is to use the rise over run method. We know that the slope is 3/1, since $m = 3$. Therefore, starting at the y-intercept, we can move to the right one unit and move up three units to find our next point, which would be (1, 8).

Another way to find the point is to plug into the equation a value for x and solve for y.

$$y = 3x + 5$$

$$y = 3(1) + 5$$

$$y = 3 + 5$$

$$y = 8$$

So our ordered pair would again be (1, 8).

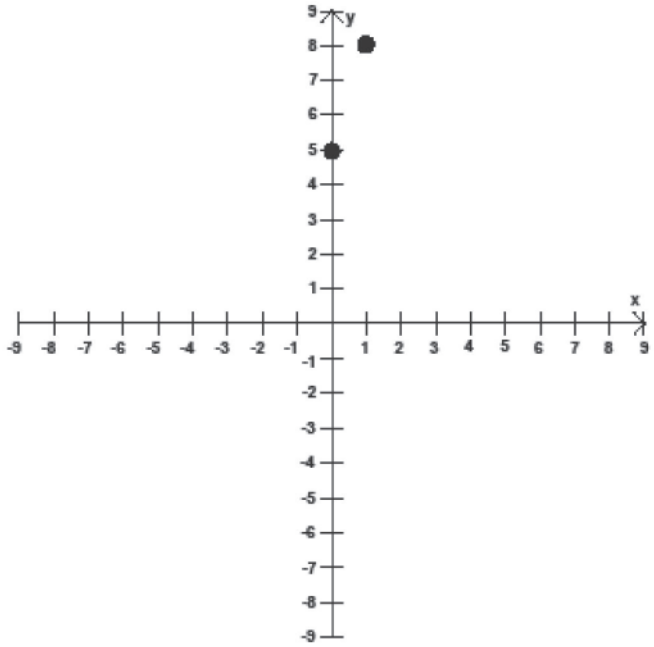

When we connect the dots, we have our line.

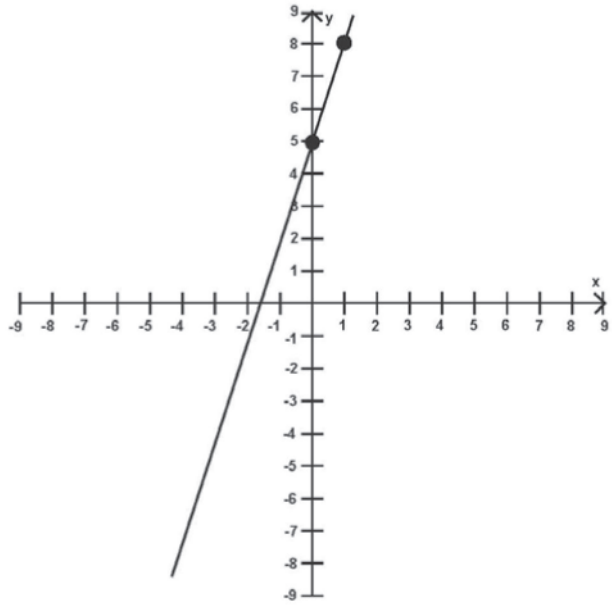

Common Errors:

- Be sure to follow the slope-intercept form exactly. The b is always the y-intercept. The slope is always m.
- The x-intercept is not needed for the slope-intercept formula.
- Slope is actually a ratio. Do not forget that a whole number for the slope is actually that number divided by 1.

Study Tips:

- Invest in graph paper. You can purchase a spiral-bound notebook that contains graph paper. Doing all your math homework on graph paper is a fine idea. Not only will you be ready in case you need to draw a graph, but the columns will help you to keep your work neat.

For Review:

- If you are unsure of the formula for finding slope, review Lesson Nine.

Problems:

1. Determine the slope-intercept form of the equation of this line.

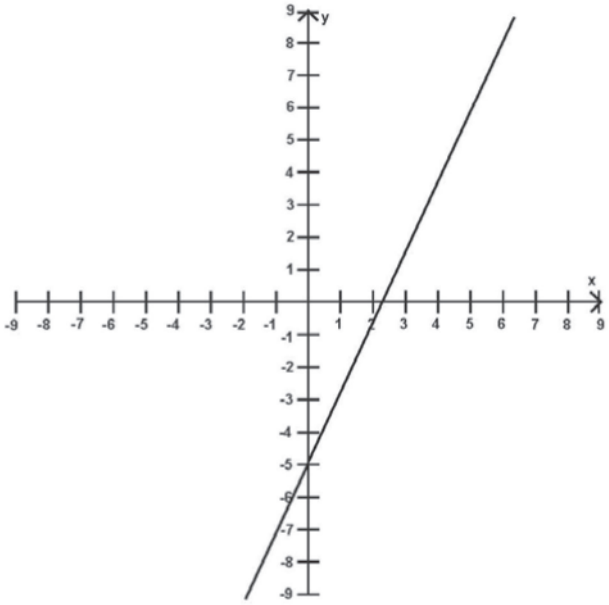

2. Determine the slope-intercept form of the equation of this line.

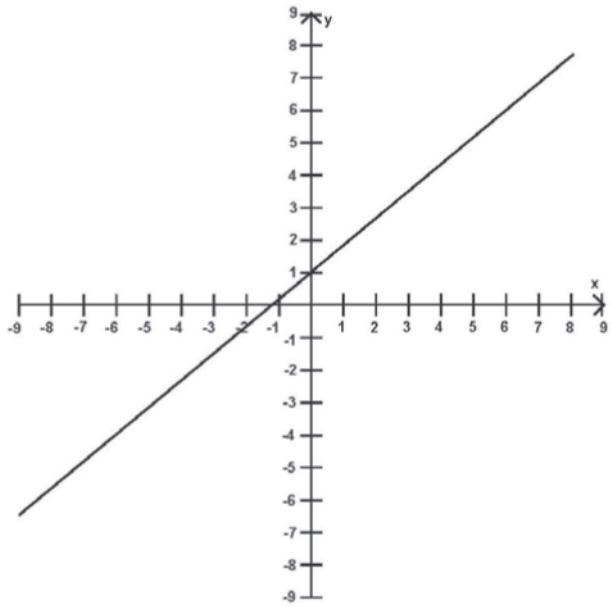

3. Determine the slope-intercept form of the equation of this line.

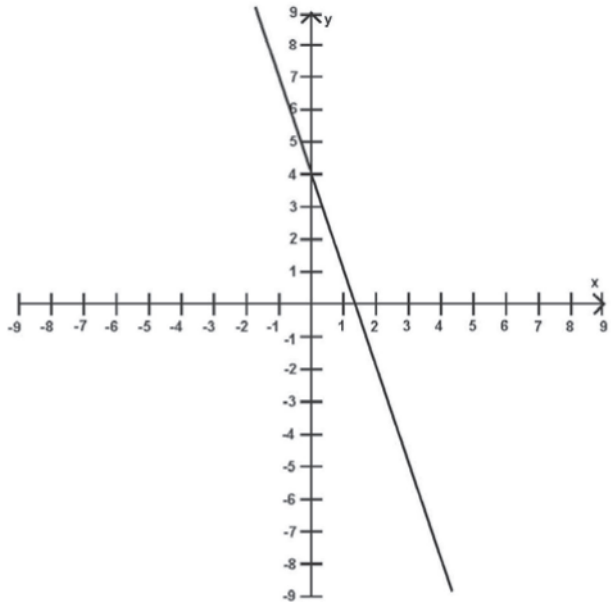

4. Determine the slope-intercept form of the equation of this line.

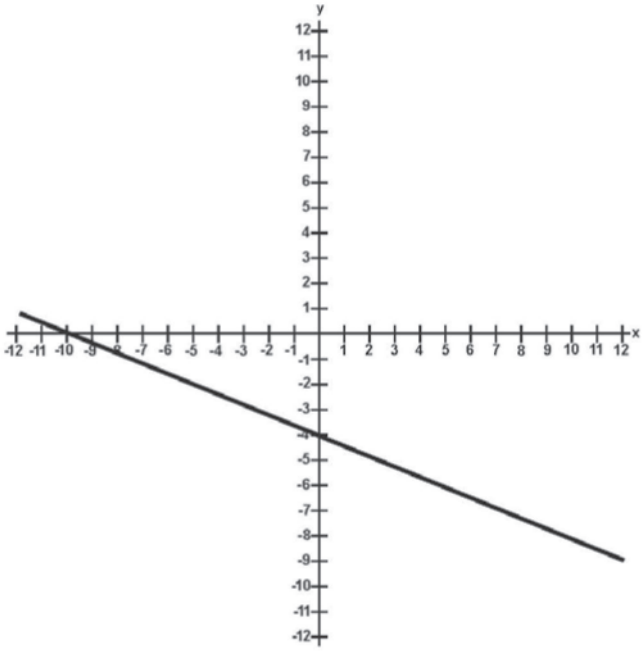

5. Determine the slope-intercept form of the equation of this line.

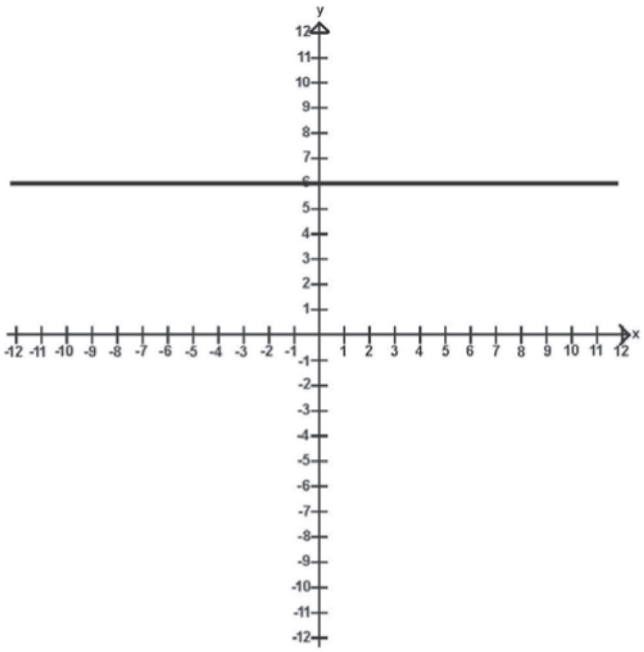

6. Sketch the graph of $y = 4x - 2$.

7. Sketch the graph of $y = -3x + 7$.

8. Sketch the graph of $y = (4/3)x + 5$.

9. Find the slope-intercept form of the equation of the line with the following points.

x	0	1	2	3	4
y	−7	−4	−1	2	5

10. Find the slope-intercept form of the equation of the line with the following points.

x	−4	0	5
y	10	2	−13

Graphing Linear Equations, Part 2

Lesson 11

Topics in This Lesson:

- The point-slope equation of a line

Summary:

There is more than one form for writing the equation of a line. One of the most versatile is known as the point-slope form. For the equation of a line, it may be even more versatile than the slope intercept form. This is an extremely important formula, one that you should put to memory as soon as possible.

Definitions and Formulas:

Point-slope form: $y - y_1 = m(x - x_1)$

where the line passes through point (x_1, y_1) and has a slope of m

Examples from the Lesson:

Write the equation of the line that has slope 5 that passes through the point $(-1, -3)$.

Using the point-slope form, $y - y_1 = m(x - x_1)$, we get

$y - (-3) = 5(x - (-1))$ or

$y + 3 = 5(x + 1)$

We can convert this into the slope-intercept formula if we want.

$y + 3 = 5(x + 1)$

$y + 3 = 5x + 5$ (distributive property)

$y = 5x + 5 - 3$ (subtracting 3 from both sides)

$y = 5x + 2$

Here's the graph of this line:

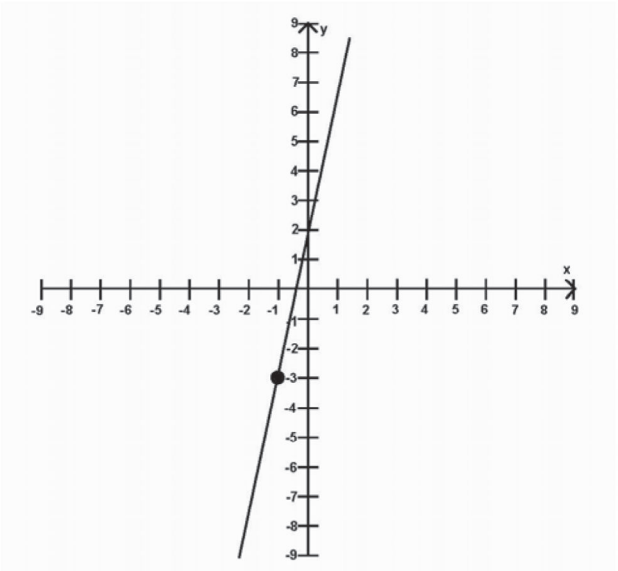

Notice that the line does indeed go through the point (−1, −3). It also has slope 5; you can see that, for example, because to get from (−1, −3) to the y-intercept (0, 2), you go up 5 and over 1. Remember, the slope is the ratio we call "rise over run," and that would be 5 over 1 or 5/1 or 5.

Additional Examples:

Find an equation of the line that passes through the points (1, −4) and (−3, −2).

Since we have two points on the line and neither point is the y-intercept, it makes sense to use the point-slope form. But, we still need to find the slope.

We simply plug in values to the slope formula.

$$m = (y_2 - y_1) / (x_2 - x_1)$$

$$= (-2 - (-4)) / (-3 - 1)$$

$$= (-2 + 4) / (-4)$$

$$= 2 / -4$$

$$= -1/2$$

We can now write down the equation for this line using the point-slope form. We will choose the first point, (1, −4).

$$y - (-4) = -1/2\ (x - 1)$$

If we had used the other point, (−3, −2), we would have gotten

$$y - (-2) = -1/2\ (x - (-3))$$

$$y + 2 = -1/2\ (x + 3)$$

Even though these equations look very different, they represent the same line.

Common Errors:

- A common mistake made by some students is to "switch the roles" of the x-coordinate and the y-coordinate of the point when writing down the point-slope form.

Study Tips:

- It is so important to keep the x and y terms clear when copying into the equation. Recopy the ordered pair onto your paper and write x_1 and y_1 above or below the corresponding terms to help you to keep things straight.
- It is a good idea to memorize the formulas you use most often, such as how to find the slope of a line.

For Review:

- If you are unsure of the formula for finding slope, review Lesson Nine.
- If you need further help with the slope-intercept form, review Lesson Ten.

Problems:

1. Find the equation of the line given here.

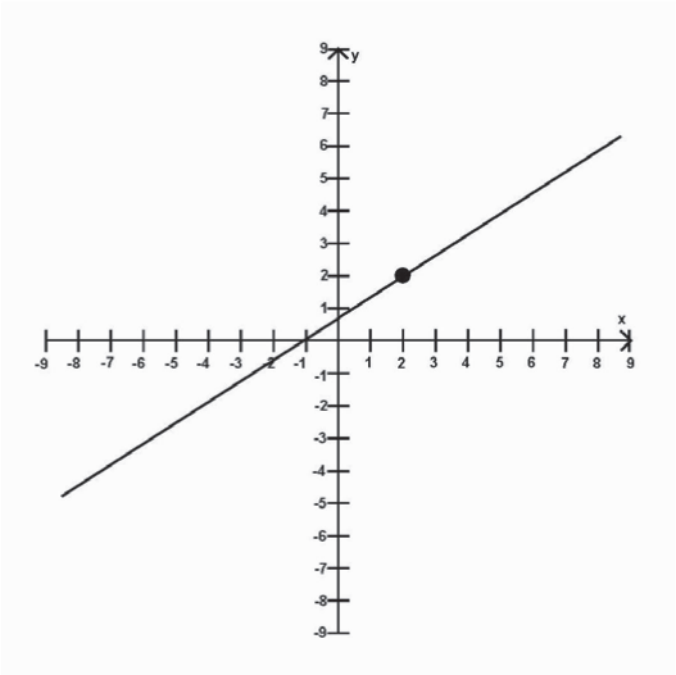

2. Find the equation of the line given here.

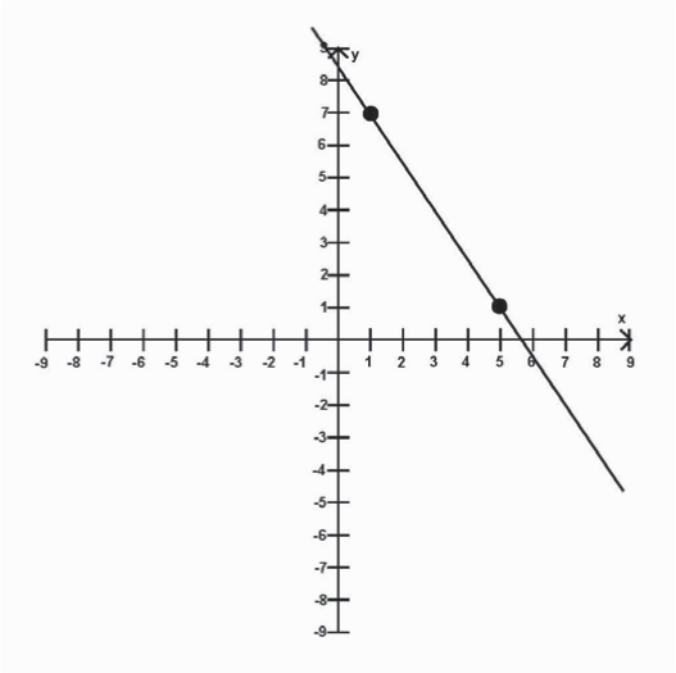

3. Find the equation of the line given here.

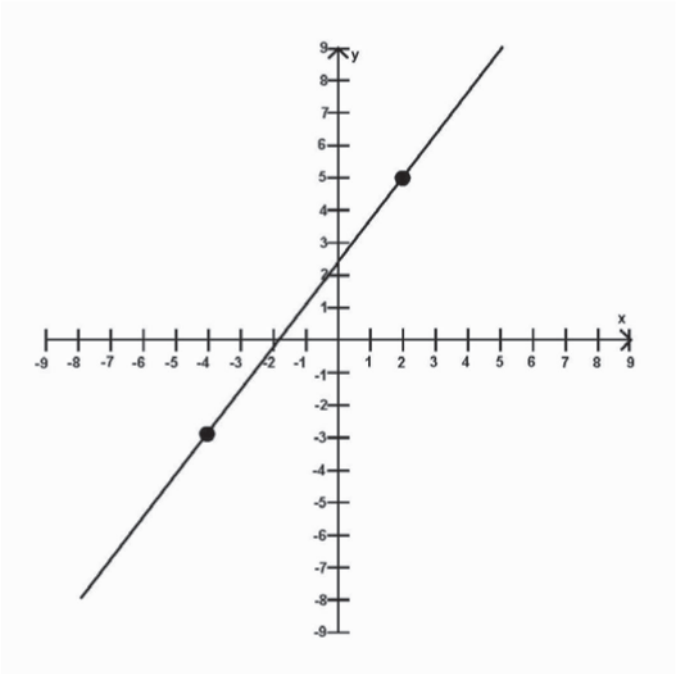

4. Find the equation of the line given here.

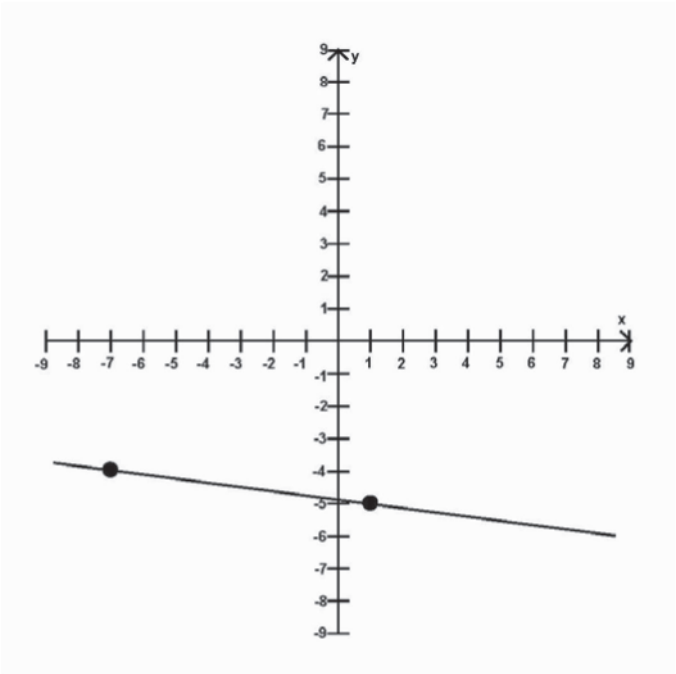

5. Find an equation of the line that passes through the two points (−3, 5) and (7, 0).

6. Find an equation of the line that passes through the two points (1, 2) and (10, 20).

7. Find an equation of the line that passes through the two points (2, 10) and (4, −6).

8. Graph the equation of $y - 2 = 3(x - 7)$.

9. Graph the equation of $y + 12 = (1/2)(x - 4)$.

10. Graph the equation of $y + 2 = -5(x + 3)$.

Parallel and Perpendicular Lines

Lesson 12

Topics in This Lesson:

- Parallel lines
- Perpendicular lines
- How to find a line that is parallel to another
- How to find a line that is perpendicular to another

Summary:

Parallel lines do not intersect each other. Sometimes it is difficult to tell by just looking at the graph of two lines if they will eventually intersect. The slopes of parallel lines must be equal, and the lines must have different y-intercepts. Vertical lines (lines with an undefined slope) are parallel if they have different x-intercepts. By looking at the slope-intercept form of two lines, we can quickly tell whether they are parallel or not.

Two lines are perpendicular if they intersect at right angles. That means that they form four 90° angles when they intersect. The slopes of two perpendicular lines are negative reciprocals. That means that when you multiply them together, the product is −1. (Numbers such as −2 and 1/2, or 3/7 and −7/3 are negative reciprocals.)

Definitions and Formulas:

Parallel lines—two lines in the Cartesian plane that never intersect each other. If the lines are non-vertical, they have the same slope and different y-intercepts.

Perpendicular lines—lines that intersect at right angles and have −1 as the product of their slopes

Examples from the Lesson:

Find the equation of the line that passes through the point (6, 4) and is parallel to $y = -3x + 5$.

The equation for this line is already in slope-intercept form. So we know that the line $y = -3x + 5$ has slope −3. The new line (whose equation we are trying to find) is supposed to be parallel to this line, which means it must also have slope −3. Since we know how to use the point-slope form of the equation of a line, we can now complete the problem.

The slope is −3 and a passes through point (6, 4).

$$y - y_1 = m(x - x_1)$$

$$y - 4 = -3(x - 6)$$

$$y - 4 = -3x + 18$$

$$y = -3x + 22$$

Additional Examples:

Find an equation of the line that is perpendicular to the line given by $y = 6x - 4$ and has y-intercept (0, 2).

We have been given the y-intercept, so we can use the slope-intercept form of the line.

$$y = mx + 2$$

Now we need to find the slope. We know that the slopes of perpendicular lines are negative reciprocals. The slope of our first line is 6. The negative reciprocal is formed by flipping the fraction upside-down and changing the sign. Since 6 is really $\frac{6}{1}$, the negative reciprocal is $-\frac{1}{6}$.

We can now insert this slope into the formula.

$$y = -\frac{1}{6}x + 2$$

If we graph the two lines, we can check our work.

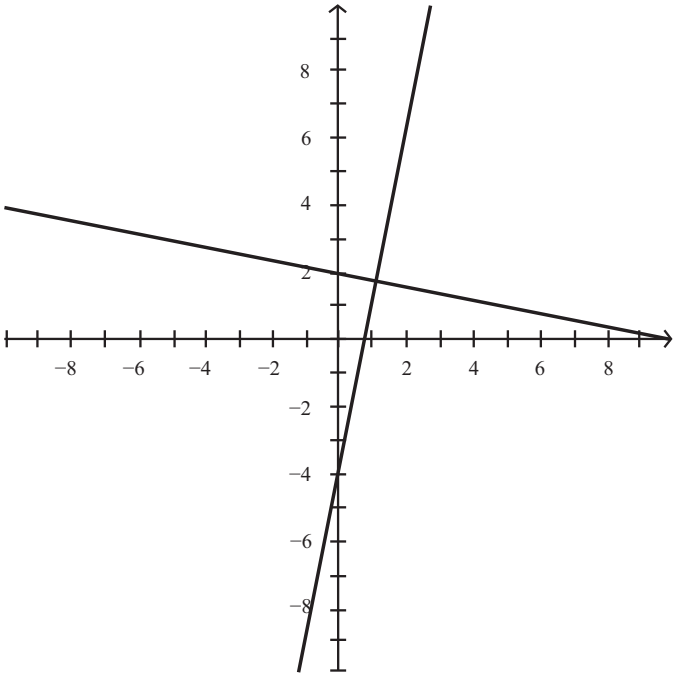

The two lines are perpendicular!

Common Errors:

- When finding the slope of a line that is perpendicular to another line, remember that the slope is the negative reciprocal of the first slope. That means that the sign of the slope must change. It does not mean that the slope of the line you are trying to determine is negative.
- Just looking at two lines on a graph does not ensure that they are parallel or perpendicular. You need to check their slopes.

Study Tips:

- Memorize the slope-intercept form, the point-slope form, and the formula to find slope.
- Careful graphing is important. Use graph paper.

For Review:

- If you need to review how to find the slope given two points, review Lesson Nine.
- If you need further help with the slope-intercept form, review Lesson Ten.
- The point-slope form is discussed in Lesson Eleven.

Problems:

Which of the following pairs of lines are parallel?

1. $y = 5x + 3$ and $y = 5x - 8$
2. $y = 2x - 7$ and $y = -2x - 6$
3. $2x + 5y = 10$ and $y = (-2/5)x + 4$
4. Find an equation of the line that passes through the point (3, 8) and is parallel to $y = 7x - 12$.
5. Find an equation of the line that passes through the point (−5, −4) and is parallel to $y = -10x + 14$.

Which of the following pairs of lines are perpendicular?

6. $y = 2x + 3$ and $y = -2x - 7$
7. $y = 4x + 3$ and $y = (-1/4)x + 5$
8. $y = (8/3)x + 2$ and $y = (3/8)x - 1$
9. Find an equation of the line that is perpendicular to the line given by $y = (3/5)x + 2$ and has y-intercept (0, 3).
10. Find an equation of the line that is perpendicular to the line given by $y = (1/4)x - 1$ and goes through the point (−3, 11).

Solving Word Problems with Linear Equations

Lesson 13

Topics in This Lesson:

- Using tables of facts or values to determine linear equations

Summary:

There are many ways to represent mathematical data. We have used graphs and the relationship between variables so far in this course. Another way one can show data is by using a table. The table shows the set of ordered pairs on a line (x, y). Working with this data, we can determine if the values represent a linear equation.

In order to be a linear equation, the slope between points must be consistent. If the slope is consistent for all the data in the table, then the curve represented is linear.

Definitions and Formulas:

Slope—$(y_2 - y_1) / (x_2 - x_1)$

Examples from the Lesson:

Does the following table represent a linear equation?

x	0	1	2	4	7
y	1	6	11	21	36

We can see that the y-values are not increasing by a constant amount, as the change is 5, then 5, then 10, then 15.

However, the x-values are not growing by the same amount either. Since they are not, we should check to see if there is a pattern.

First we see that when x goes from 0 to 1, y goes from 1 to 6. That's a change of 5 in the y-value. The same is true when x goes from 1 to 2. So, if this table is representing a linear equation, it must be the case that an increase of +1 in the x-values must correspond to an increase of +5 in the y-values.

Now let's see what happens when x changes from 2 to 4. Well, from $x = 2$ to $x = 3$, the y-value would have to grow by +5, and then from $x = 3$ to $x = 4$, the y-value would have to grow another +5. So from $x = 2$ to $x = 4$, the y-values would need to grow by +5 + 5, or 10, which is true.

When $x = 2$, $y = 11$. And when $x = 4$, $y = 21$.

And $21 - 11 = 10$. Then we are still on track for this table to represent a linear equation. Let's look at the last pair of points.

When $x = 4$, $y = 21$, and when $x = 7$, $y = 36$. Now there is a difference of 3 in the x-values ($7 - 4 = 3$). So the difference in the y-values would need to be $5 + 5 + 5 = 3 \times 5 = 15$, which it is, since $36 - 21 = 15$.

Therefore, this table does represent a linear equation, and it turns out the linear equation is $y = 5x + 1$. We know this is true because the slope of the line is 5 (the change in the y-value), and the y-intercept (0, 1) was given to us in the table.

Additional Examples:

Does the following table representing a linear equation?

x	−2	−1	5	8
y	0	2	14	20

There are several ways to approach this problem. The first would be to look at the y-values. Are they increasing by a constant amount? Yes, they are! We can see that as x increases by 1, the y-value increases by 2.

What if we did not notice this constant value change or if we just wanted to check to make sure? We could calculate the slope and see if it is consistent. We know that the slope is 2 from the change in the y-value. Let's prove it by choosing two ordered pairs, (0, 4) and (−1, 2).

Slope = change in y / change in x

Slope = (2 − 4) / (−1 − 0)

Slope = −2/ −1

Slope = 2/1 or 2

We need to check the next set of points, (−1, 2) and (5, 14), to make sure that the slope between them is 2.

Slope = change in y / change in x

Slope = (14 − 2) / (5 − (−1))

Slope = 12/6

Slope = 2/1 or 2

Now, choose the final two points, (5, 14) and (8, 20). Is their slope 2?

Slope = change in y / change in x

Slope = (20 − 14) / (8 − 5)

Slope = 6/3

Slope = 2/1 or 2

Yes, the slope is still +2. This table does represent a linear equation.

Common Errors:

- When visually checking to see if the y-value is increasing by a constant amount, look at the x-value. There may have been some numbers "skipped." For example, the x-values might be 0, 1, 2, 5, and 7. They are not increasing by 1!

Study Tips:

- You can use the data from a table to write the slope-intercept form of the equation of a line. Remember, the formula is $y = mx = b$. The slope is m and the y-intercept is b. Using this formula, you can calculate the "missing values" in a table or predict values by plugging in new values for x.

Problems:

Determine whether the following tables of data describe a linear equation.

1.

x	0	1	2	3	4	5
y	7	12	17	22	27	32

2.

x	−2	−1	0	1	2
y	8	−1	−10	−19	−28

3.

x	−1	0	1	2
y	−1	0	1	8

4.

x	−4	−1	0	2	5
y	4	4	4	4	4

5.

x	1	2	3	4
y	0	1	4	9

6.

x	0	2	4	5
y	3/2	5/2	7/2	4

Linear Equations for Real-World Data

Lesson 14

Topics in This Lesson:

- Linear equations in the real world

Summary:

Linear equations show the graph of a line. But they also represent a function in which there is constant change or movement. A car traveling at a set rate of speed could have that speed and its position represented by a linear equation or graph. The conversion of temperature from degrees Fahrenheit (°F) to Celsius (°C) can be shown as a linear graph as well.

We can use these equations, tables, and graphs to predict future values in the table.

Examples from the Lesson:

It is known that the boiling point of water depends on the altitude at which we are boiling the water. It is also known that this relationship (between boiling point of water and altitude) is linear. Given that the boiling point of water is 100°C at sea level (which is 0 ft above sea level) and approximately 91.6°C at 8,000 ft above sea level, what is the boiling point of water at Mile High Stadium in Denver, Colorado?

Let's start by asking the following: What is the linear equation that describes the relationship between boiling point of water in degrees Celsius and the altitude above sea level in feet?

Let H = height above sea level in feet and B = the boiling point temperature of water in degrees Celsius.

Then we want to find a linear equation that treats H as the independent variable (like x) and B as the dependent variable (like y). First we will need to find the slope of the line. Since the variable B is acting like the y here, the slope is "change in B over change in H" and this is given by

$$(100 - 91.6) / (0 - 8{,}000)$$

$$= 8.4 / (-8{,}000)$$

$$= -0.00105$$

Next can we find an equation for our line? Well, we were given two points on the line: (0, 100) and (8,000, 91.6). (Notice that being at sea level is the same as $H = 0$!) Therefore, we were actually given the y-intercept (or to be completely correct, it is the B-intercept). Since we have the intercept, the slope-intercept form of the equation of the line can be used.

$$B = -0.00105H + 100$$

Now we need to find the value of B when H = one mile. (Mile High Stadium is so named because it is one mile above sea level.)

Be careful not to mix up the units. We have measurements in feet and in miles. It turns out that one mile equals 5,280 ft. So we need to use $H = 5{,}280$ in our equation for boiling point. So the boiling point at Mile High Stadium is

$$B = -0.00105H + 100$$

$$B = -0.00105(5{,}280) + 100$$

$$B = -5.544 + 100$$

$$B = 94.456°\text{C}$$

Does this answer make sense?

At sea level (0 ft above sea level), the boiling point is 100°C. At 8,000 ft above sea level, the boiling point is 91.6°C. One mile (5,280 ft) is between 0 and 8,000 (and it is closer to 8,000 than to 0), so we would expect an answer somewhere between 100 and 91.6 (but probably closer to the 91.6 than to 100). And our answer, 94.456, is between 100 and 91.6 and a bit closer to 91.6 than to 100. That gives us confidence that our result is in the right "ballpark" (or football stadium, as the case may be).

Additional Examples:

Below is a table that shows the number of words Trina can read in relation to minutes. Write a linear equation that shows her reading speed. How many minutes will it take her to read a book that is 80,000 words long?

***x* (Minutes)**	1	5	30	60
***y* (Words)**	250	1,250	7,500	15,000

Even though this problem asks about number of words and time, it is still a linear equation. We still have two variables, just as we would for x and y. However, this time they are the number of words and time in minutes.

Graphing this equation would be unwise. Let's find the slope using two points. We'll choose (1, 250) and (5, 1,250). Even though these numbers are larger than those we've been working with, the calculations for slope are done in exactly the same way.

$$\text{Slope} = (y_2 - y_1) / (x_2 - x_1)$$

$$\text{Slope} = (1{,}250 - 250) / (5 - 1)$$

$$\text{Slope} = 1{,}000/4$$

$$\text{Slope} = 250$$

Yes, that's a huge slope! But we knew the slope would be large, as the change in y is so much greater than the change in x.

Now that we know the slope, let's use the point-slope form with the point (1, 250) to find the equation of the line.

$$y - y_1 = m(x - x_1)$$

$$y - 250 = 250\,(x - 1)$$

$$y - 250 = 250x - 250$$

$$y = 250x - 250 + 250$$

$$y = 250x + 0$$

This means that our y-intercept is 0.

Now, let's find out how long it will take Trina to read a book that is 80,000 words long. We know that the number of words is our y-value. So we need to plug in this number to get the x-value for our ordered pair.

$$y = 250x + 0$$

$$80{,}000 = 250x + 0$$

$$\frac{80{,}000}{250} = \frac{250x}{250}$$

$$320 = x$$

Our ordered pair is (320, 80,000). That means it will take Trina 320 minutes to read 80,000 words.

Common Errors:

- It is easy to confuse what you have called the x-value or the y-value. Be sure to label the table carefully.
- Do not mix up units! If you are using seconds and are given a time in minutes, make sure to convert the units so they are all the same.

Study Tips:

- Even though the variables might not be x and y, you can still put an x and y in front of the table to remind yourself on which axis you want to graph them or which one represents the y-value for slope.

Problems:

In the following problems, we will use the equation $C = (5/9)(F - 32)$, which relates the temperature in degrees Celsius to the temperature in degrees Fahrenheit.

1. Determine the temperature in Celsius that corresponds to 95°F.
2. Determine the temperature in Celsius that corresponds to 107°F.
3. Determine the temperature in Fahrenheit that corresponds to 20°C.
4. Your friend Bill has a lawn-cutting business in the summer. He makes $25 for each yard that he cuts. Assuming Bill started with $42 in the bank at the beginning of the summer, and assuming he will save ALL the money he makes this summer (and not spend any!), determine a linear equation that tells us how much money Bill has in the bank after each yard is cut.
5. Using the equation from problem 4, how much money will Bill have in the bank after cutting 12 yards?
6. During the month of June (when Bill starts his business), Bill cuts five different yards four times each (basically, each yard is cut once a week for the entire month). How much money will Bill have at the end of the month?
7. Bill is really trying to save up to buy a new lawn mower. The cost will be $1,000. How many yards will Bill need to cut over the course of the summer to have this much money in his account?
8. A food bank gives out 12 cans of soup each week. Assume that it started the year with 816 cans of soup thanks to a generous donation from a local food company. Write down a linear equation which gives the number of cans of soup still in the food bank after a certain number of weeks have passed.
9. How many cans of soup are still in the food bank after half the year (26 weeks) has gone by?
10. How many weeks must pass before the food bank will run out of cans of soup (assuming it does not receive any additional donations of soup)?

Systems of Linear Equations, Part 1

Lesson 15

Topics in This Lesson:

- Solving systems of linear equations by graphing
- Solving systems of linear equations by substitution

Summary:

Linear equations tell us where to draw a line on a graph. When we have two or more linear equations, we call this a system of linear equations. Sometimes these linear equations will intersect or cross each other. The point at which they intersect is called the solution to the system.

We can find the solution to a system of linear equations in several ways. Graphing the two equations will give a visual picture of where the lines intersect. This method has its drawbacks when the lines intersect at a fractional point or for very large values. Another way to determine the solution of a system of linear equations is by substitution. This is done by substituting information from one equation into the other equation. The modified equation is then solved, giving the solution.

Definitions and Formulas:

System of linear equations—a set of two or more linear equations

Solution of the system—an ordered pair that makes all the equations in a system of linear equations true

Examples from the Lesson:

Solve the following system by graphing:

$$y = -2x + 3$$

$$y = 3x - 7$$

Before we draw the graphs, we can tell that there will be a solution to this system based on the slopes, as one slope is negative and the other is positive. The two lines will have to cross somewhere.

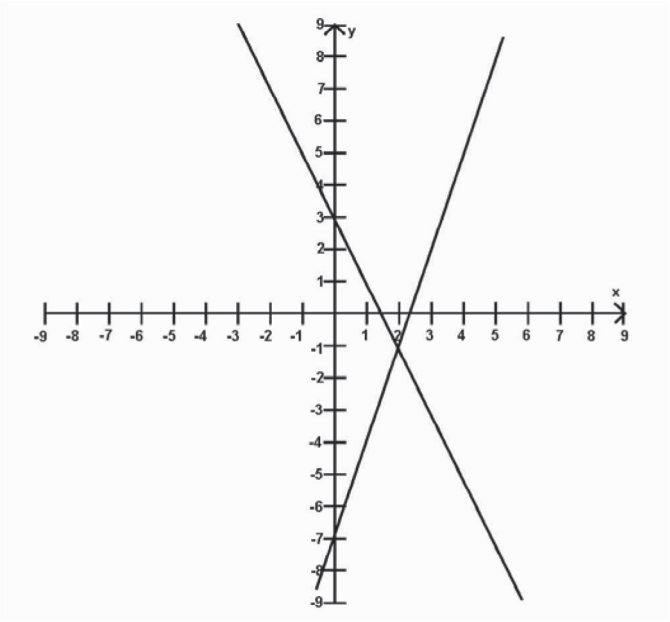

The solution appears to be (2, −1).

Let's confirm this:

$y = -2x + 3$

$-1 = -2(2) + 3$

$-1 = -4 + 3$

$-1 = -1$

$y = 3x - 7$

$-1 = 3(2) - 7$

$-1 = 6 - 7$

$-1 = -1$

So (2, −1) is a solution of the system.

Additional Examples:

Solve this system.

$2x - 3y = 5$

$y - 2x = 5$

The first thing we want to do is get one of the equations solved for y. That will allow us to substitute into the other equation.

$y - 2x = 5$

$\underline{+2x \qquad +2x}$

$y = 5 + 2x$

We now can replace the y in the first equation with $5 + 2x$.

$2x - 3y = 5$

$2x - 3(5 + 2x) = 5$

Now we need to solve for x.

$2x - 3(5 + 2x) = 5$

$2x - 15 - 6x = 5$

$-4x - 15 = 5$

$-4x = 20$

$x = -5$

We now have the x-value, −5. We substitute this into one of our original equations to find the y-value.

$y - 2x = 5$

$y - 2(-5) = 5$

$y + 10 = 5$

$y = -5$

So our solution to this system is

$$x = -5, y = -5$$

This is the same as the ordered pair $(-5, -5)$.

Let's check to make sure that this is indeed a solution by substituting these values into the original equations.

$$2x - 3y = 5$$

$$2(-5) - 3(-5) = 5$$

$$-10 + 15 = 5$$

$$5 = 5$$

$$y - 2x = 5$$

$$-5 - 2(-5) = 5$$

$$-5 + 10 = 5$$

$$5 = 5$$

Common Errors:

- Just because something looks like it might be correct on a graph, it does not mean that it is. Human error (drawing lines less than straight, the grid not drawn to scale, etc.) can cause errors.

Study Tips:

- If you have not already invested in some graph paper, do so! It will be invaluable as you progress through this algebra course.
- Continue to check your work by substituting your answers into the original equation. It may seem like a lot of extra work, but if you get into the habit of doing it, it will go more quickly. (And you might catch errors you have made in your calculations.)

Problems:

1. Solve the following system by graphing.
   $y = 2x - 12$
   $y = -2x - 8$
2. Solve the following system by graphing.
   $y = 5x - 4$
   $y = 3x$
3. Solve the following system by graphing.
   $y = -2x - 5$
   $y = -2x + 4$
4. Solve the following system by graphing.
   $6x + 2y = 16$
   $6x - 3y = 36$
5. Solve the following system by graphing.
   $y = 5x + 2$
   $25x + 5y = 60$

6. Solve the following system using substitution.

$4x + 3y = 10$

$y = 2x + 30$

7. Solve the following system using substitution.

$2x + 5y = 24$

$y = 3x - 2$

8. Solve the following system using substitution.

$y = 6x - 4$

$y = -2x + 28$

9. Solve the following system using substitution.

$4x + 2y = 34$

$y = -2x + 1$

10. Solve the following system using substitution.

$5y + 3x = 2$

$4y + x = -4$

Systems of Linear Equations, Part 2

Lesson 16

Topics in This Lesson:

- Solving systems of linear equations by elimination

Summary:

When solving systems of linear equations, sometimes we need to manipulate the numbers to eliminate a variable. Once we have done the elimination, we can use substitution to solve for the solution.

We eliminate by combining the two equations in such a way that one of the variables goes away. Sometimes, simple addition or subtraction of the entire equation will eliminate a variable. Sometimes, we must multiply the entire equation by a number to get the coefficients (the numbers in front of the variables) to be equal.

When we add equations, we vertically line up the like terms of the two equations and combine them. When we subtract equations, we change all the signs of the second equation, vertically line up the like terms, and combine them.

Once we have eliminated a variable, we can proceed to solve the system of equations by using substitution.

Examples from the Lesson:

Solve.

$$-2x + 15y = -32$$
$$7x - 5y = 17$$

Let's start by trying to add the equations.

$$\begin{array}{l} -2x + 15y = -32 \\ \underline{7x - 5y = 17} \\ 5x + 10y = -15 \end{array}$$

Since neither variable was eliminated, let's try subtracting the equations instead.

$$\begin{array}{l} -2x + 15y = -32 \\ \underline{-(7x - 5y) = -17} \\ -9x + 20y = -49 \end{array}$$

Again, neither variable was eliminated.

Let's look at the equations. If we multiply one of the equations by a number, will we be able to eliminate a variable? We can see that 5 is a multiple of 15, so why not multiply the second equation in the original system by 3? Remember, we need to multiply the entire equation, not just one side.

$$3(7x - 5y = 17)$$
$$21x - 15y = 51$$

Should we add or subtract? It makes sense to add as there are already two equal numbers with opposite signs.

$$\begin{array}{l} -2x + 15y = -32 \\ \underline{21x - 15y = 51} \\ 19x + 0 = 19 \end{array}$$

This is the same as $19x = 19$.

Dividing both sides of this equation by 19 gives $x = 1$. We

plug $x = 1$ back into one of the original equations to find y.

$$-2x + 15y = -32$$

$$-2(1) + 15y = -32$$

$$-2 + 15y = -32$$

$$15y = -30$$

$$y = -2$$

Final solution: $(1, -2)$.

Let's check the solution to make sure we have the right answer. Substitute the x- and y-values into the original equations.

$$-2x + 15y = -32$$

$$-2(1) + 15(-2) = -32$$

$$-2 - 30 = -32$$

$$-32 = -32$$

$$7x - 5y = 17$$

$$7(1) - 5(-2) = 17$$

$$7 - (-10) = 17$$

$$7 + 10 = 17$$

$$17 = 17$$

Our solution is correct!

Additional Examples:

Solve the following system of equations.

$$5x - 2y = 9$$

$$12x - 8y = 4$$

A quick look will tell us that neither the x- nor the y-coefficient is the same in both equations, so combining the two by addition or subtraction will not work. We can see that 2 is a multiple of 8, since $2 \times 4 = 8$. We should multiply the first equation by 4.

$$4\,(5x - 2y = 9)$$

Now we need to decide if we should add or subtract the equations.

$$20x - 8y = 36$$

$$12x - 8y = 4$$

Since we need to have a −8 and a +8 to eliminate the variables, we should subtract. Change all the signs of the second equation and combine.

$$\begin{array}{r} 20x - 8y = 36 \\ -12x + 8y = -4 \\ \hline 8x = 32 \end{array}$$

Divide both sides by 8 to get the x-value:

$$\frac{8x}{8} = \frac{32}{8}$$
$$x = 4$$

Now that we have our x-value, we plug in to find the y-value.

$5x - 2y = 9$

$5(4) - 2y = 9$

$20 - 2y = 9$

$-2y = -11$

$y = 11/2$

So our solution is (4, 11/2).

Let's check our work.

$5x - 2y = 9$

$5(4) - 2(11/2) = 9$

$20 - (22/2) = 9$

$20 - 11 = 9$

$9 = 9$

$12x - 8y = 4$

$12(4) - 8(11/2) = 4$

$48 - (88/2) = 4$

$48 - 44 = 4$

$4 = 4$

Our solution is correct.

Common Errors:

- When multiplying an equation for elimination, make sure that you multiply both sides of the equation, not just one side. Otherwise, the equation will no longer be true.
- Remember, in order to eliminate a variable, the coefficients must be the same number but have opposite signs.

For Review:

- If you want to review solving systems of equations by substitution, review Lesson Fifteen.

Problems:

Solve the following systems of linear equations.

1. $2x + y = 9$
$3x - y = 46$

2. $4x + 3y = 20$
$-4x + 5y = 28$

3. $3x - 4y = 10$
$3x + 7y = -34$

4. $2x - 8y = 15$
$2x - 8y = 24$

5. $2x - y = 9$
$3x + 4y = -14$

6. $2x + 5y = 12$
$-4x + 4y = 18$

7. $14x - 12y = 10$
$-7x + 6y = 13$

8. $3x - 4y = -10$
$2x + 5y = 70$

9. $2x + 4y = 14$
$-3x + 7y = -8$

10. $4x + 6y = 5$
$-12x - 18y = -15$

Linear Inequalities

Lesson 17

Topics in This Lesson:

- Basic properties of inequalities
- Inequalities on the number line
- Graphing inequalities in the Cartesian plane

Summary:

Linear inequalities are like linear equations, but the equals sign is replaced by some sort of inequality sign. When you graph inequalities on a number line, you use a closed dot for the less than or equal to ($\leq$) and greater than or equal to ($\geq$) symbols, and an open dot for the less than (<) or greater than (>) symbols. The line is slanted to the right for "greater than" and to the left for "less than."

When you graph inequalities in the Cartesian plane, you use a solid line for less than or equal to and greater than or equal to symbols and a dashed line for less than/greater than symbols. The solution to an inequality graphed on the Cartesian plane will be half the plane, which is split by the boundary line. If the inequality is greater than the line, the solution will usually be to the top or right, wherever the numbers are larger. If the inequality is less than the boundary line, the solution will usually be to the left or lower part of the plane where the numbers are smaller.

Examples from the Lesson:

Graph the solution set of the linear inequality $4x + 8y \geq 10$.

To start this problem, we need to determine the boundary "edge," which is the straight line defined by $4x + 8y = 10$. This is the standard form of the equation of the line. Let's put it in slope-intercept form.

$$4x + 8y = 10$$

$$8y = -4x + 10$$

$$y = -4x/8 + 10/8$$

$$y = -1/2x + 5/4$$

The boundary line has slope −1/2 and y-intercept of 5/4. Notice also that since the inequality here is ≥ rather than >, we will draw in our boundary line as a solid line rather than a dashed line.

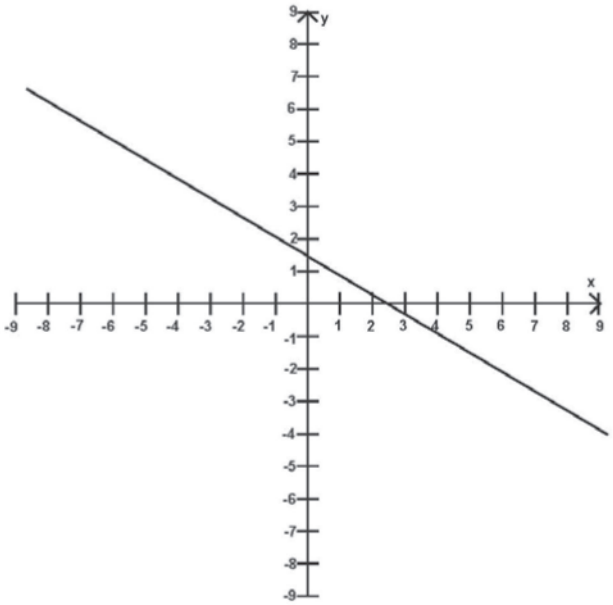

We have two regions, the one above the line, the other below. Which one do we choose as the solution? We want $y \geq -1/2x + 5/4$, as the values are greater than or equal to the values on the line, so we choose the region above.

Let's check our work. Choose a point that is in the solution set. That would be any point found on or above the solid line. Let's choose (0, 3).

$$4x + 8y \geq 10$$

$$4(0) + 8(3) \geq 10$$

$$0 + 24 \geq 10$$

$$24 \geq 10$$

Correct.

Additional Examples:

Graph the solution set of the linear inequality $-3y - 2x < 6$.

The first thing to notice is that we have a negative y-value. Before we do any other math, we can divide the whole inequality by −1, which will give us a positive y-value.

$$\frac{-3y - 2x > 6}{-1 \qquad -1}$$

Dividing by −1 means that we change all the signs and flip the inequality.

$$+3y + 2x > -6$$

Now we can move forward. When we graph in the xy-plane, we need to start by drawing a boundary edge. We do this by replacing the inequality sign with an equals sign, $+3y + 2x > -6$, and then putting the equation into slope-intercept form.

$$\begin{aligned} +3y + 2x &= -6 \\ 3y + 2x &= -6 \\ \hline -2x \quad & -2x \end{aligned}$$

$$\frac{3y}{3} = \frac{-2x - 6}{3}$$

$$y = -2/3x - 2$$

Slope is $-2/3$ and the y-intercept is -2.

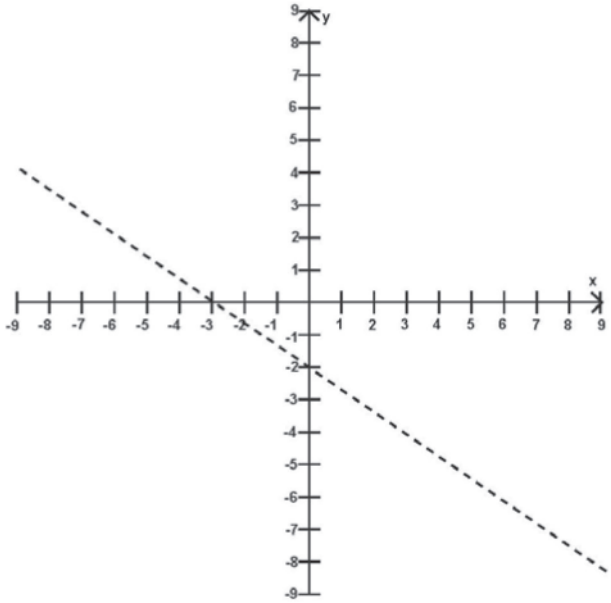

Which region do we want for our solution? $-3y - 2x < 6$ was our original equation, but we changed it to $+3y + 2x > 6$ when we eliminated the negative y-value. So our solution is the area to the left and above the line.

Let's choose a point in this area and check. $(-4, 6)$ is in that region.

$$+3y + 2x > -6$$

$$+3(6) + 2(-4) > -6$$

$$18 - 8 > -6$$

$$10 > -6$$

Correct!

Common Errors:

- Even after you have drawn a boundary line, you have not solved the inequality. You must determine if the solutions lie above or below the line you drew.
- Solid lines are only drawn on the *xy*-plane when the inequality is less than or equal to or greater than or equal to. Dashed lines are drawn when there is no "equal to."
- The inequality sign flips when multiplying or dividing by a negative number. Addition and subtraction of negative numbers does not affect the inequality symbol.

Study Tips:

- If you are having trouble with the inequality sign, try viewing the equation as a simple linear equation with an equals sign. How would you graph it? You start to graph the inequality in the same way.
- When you start out with a negative *y*-value, you can divide the entire inequality by −1. This will change the signs of all the numbers and will flip the inequality sign.
- How should you choose a point to check to make sure your solution is correct? Any point in the region of the solution will work. If you need, you can shade the solution area with your pencil. What points are in this region? Pick one and use it to check.

Problems:

Solve the following linear inequalities.

1. $y > 2x + 3$

2. $y \leq 4x - 1$

3. $y \geq \frac{1}{3}x - 2$

4. $y < -\frac{2}{3}x + 4$

5. $x < -5$

6. $y \leq \frac{3}{2}$

7. $4x - 6y > 10$

8. $-2x - 3y \leq 9$

9. $2x < -5y + 1$

10. $12y + 96 \geq 0$

An Introduction to Quadratic Polynomials

Lesson 18

Topics in This Lesson:

- The form of quadratic equations
- Parabolas—the graphs of quadratic equations
- Simplifying expressions
- Factoring out a greatest common factor (GCF)
- The FOIL method

Summary:

Equations of the form $y = ax^2 + bx + c$ are called quadratic equations. *Quadratic* comes from a Latin word that means "to square"—hence, the x^2 term. The graphs of quadratic equations are parabolas because the x-term is being squared. When the coefficient of the x^2-term is positive, the ends of the parabola go up. When the coefficient of the x^2-term is negative, the ends point down.

The solutions of quadratic equations can sometimes be found by factoring the equation. Factoring means to solve the equation for x. Quadratic equations often have two solutions. (There are two x-intercepts.)

One way to create quadratic equations is to multiply two binomials together. A simple way to do this is to use the FOIL method. FOIL stands for "**F**irst, **O**utside, **I**nside, **L**ast" and describes the order of multiplication.

Definitions and Formulas:

Quadratic equation—an equation that includes a variable raised to the second power (squared). Its typical form is $y = ax^2 + bx + c$.

Parabola—a U-shape; the graphs of quadratic equations of the form $y = ax^2 + bx + c$ are shaped like parabolas

Examples from the Lesson:

Expand $(2x - 1)(5x - 7)$.

Use the FOIL method to make sure that we multiply all the terms together.

$$(2x - 1)(5x - 7) = \underset{\text{F}}{(2x)(5x)} + \underset{\text{O}}{(2x)(-7)} + \underset{\text{I}}{(-1)(5x)} + \underset{\text{L}}{(-1)(-7)}$$

$$= 10x^2 - 14x - 5x + 7$$

Combine like terms to get our final answer.

$$10x^2 - 19x + 7$$

Additional Examples:

Expand $(x - 3)(3x + 5)$.

Use the FOIL method.

F $(x)(3x) = 3x^2$

O $(x)(+5) = 5x$

I $(-3)(3x) = -9x$

L $(-3)(+5) = -15$

$3x^2 + 5x - 9x - 15$

Combine like terms to get $3x^2 - 4x - 15$.

Common Errors:

- It is easy to forget a term when multiplying binomials. There should be four terms after you are done multiplying. When you combine like terms, some of the original four terms may combine or cancel.
- Do not forget to combine like terms after you multiply!

Study Tips:

- Some students benefit from a visual approach to multiplying binomials. Use the face method. Write a binomial: $(x + 4)(2x - 2)$. Then draw a half circle/arch from x to $2x$ and another from 4 to -2. Then, under the terms, draw a half circle from 4 to $2x$ and a larger one from x to -2. You get crossing half circles on the top that look like eyes or eyebrows, and the two underneath look like a nose and a smile.

Problems:

1. Does the graph of the quadratic $3x^2 - 5x + 2$ open upward or downward? Explain your answer.
2. Does the graph of the quadratic $-x^2 + x + 2$ open upward or downward? Explain your answer.
3. Simplify the product $4x(3x - 10)$.
4. Factor out the greatest common factor in the expression $15x^2 + 20x - 50$.
5. Expand $(A - 2)(A - 8)$ using the FOIL method.
6. Expand $(x + 7)(x - 3)$ using the FOIL method.
7. Expand $(3x + 2)(7x + 4)$ using the FOIL method.
8. Expand $(5y - 1)(3y + 9)$ using the FOIL method.
9. Expand $(2x - 6)^2$.
10. Expand $(3t - 2)(3t + 2)$.

Factoring Trinomials

Lesson 19

Topics in This Lesson:

- Finding solutions for quadratic equations
- Zeros of the equation
- Factoring quadratic equations

Summary:

The "zeros of the equation" are the numbers you plug in for x to make the equation $ax^2 + bx + c = 0$ true. They can be any number, not just zero.

The way to find the zeros of the equation $ax^2 + bx + c = 0$ is to factor. To factor an equation means to break it down into its factors. The way we factor a quadratic equation is to set up two sets of parentheses with a variable in each one, an addition or subtraction sign, and then a number. We use trial and error to determine the numbers, signs, and coefficients of the variables.

When we multiply two binomials together, we get a trinomial.

Definitions and Formulas:

Zeros of the equation—values of x that are solutions of a quadratic equation; they are the x-intercepts of the graph $ax^2 + bx + c$. They can be any number, not just zero. However, when they are plugged into the quadratic equation, $ax^2 + bx + c$, the equation is true.

Binomial—an expression with two terms, such as $x + 3$ or $n - 7$

Trinomial—an expression with three terms, such as $x^2 - 5x + 2$

Examples from the Lesson:

Factor this quadratic polynomial.

$$x^2 - 3x - 40$$

Let's start by filling in what we know. First we know the polynomial will factor as the product of two binomials.

$$(x \quad)(x \quad)$$

What do we know about the signs inside each binomial? Since our constant, −40, is negative, the signs within the binomials must be different.

$$(x \ - \ )(x \ + \ )$$

Next we need to find the constants.

The product of the two numbers we choose must be 40. What are the possible factors?

1, 40

2, 20

4, 10

5, 8

Which of these pairs could we combine to make our middle term, $-3x$? 5 and 8 could be subtracted to make -3 if we make the 8 negative. So our factorization must be

$$(x - 8)(x + 5)$$

Let's check our work by FOILing:

$$(x - 8)(x + 5)$$
$$= x^2 + 5x - 8x - 40$$
$$= x^2 - 3x - 40$$

Additional Examples:

Factor $3x^2 - 14x + 16$.

Our first step is to write out the parentheses with our x-terms. In this case, one will be an x and the other a $3x$.

$$(3x \quad)(x \quad)$$

Next we determine what the signs will be. Our constant is +16. Either two negative numbers or two positive numbers could be multiplied together to get +16. Let's look at the middle term, $-14x$. Since we know that the signs have to be the same, the only way to get a negative answer with two numbers having the same sign is by combining two negative numbers. Therefore, both our signs must be negative.

$$(3x - \quad)(x - \quad)$$

Now we just need the final numbers. Our constant is +16. What are the possible factors?

1, 16

2, 8

4, 4

Since we have a 3 as a coefficient, one of the factors is going to have to be multiplied by 3 before we combine it. So we cannot simply look at the list of factors and see what we can combine to make our middle term, $-14x$.

Use trial and error.

$(3x - 16)(x - 1)$ Middle terms $-3x$ and $-16x = -19x$. No.

$(3x - 4)(x - 4)$ Middle terms $-12x$ and $-4x = -16x$. No.

$(3x - 2)(x - 8)$ Middle terms $-2x$ and $-24x = -26x$. No.

We've used all our factors, but we do not have an answer. What should we do? Since there is a 3 being multiplied, we should consider switching the placement of the factors.

$(3x - 8)(x - 2)$ Middle terms $-8x$ and $-6x = -14x$. Yes!

So our answer should be $(3x - 8)(x - 2)$. Let's check it by FOILing.

$$3x^2 - 6x - 8x + 16$$
$$3x^2 - 14x + 16$$

Common Errors:

- Do not forget to multiply by the coefficient of the x-term if there is one.

Study Tips:

- A quick way to factor a quadratic equation is to write down the factors of the last term in the equation. Which set of factors can you combine to make the middle term in the equation? (If there is a coefficient in front of the x^2-term, this does not work the same way.)
- Always check your factoring by FOILing.

Problems:

Factor the following.

1. $x^2 + 7x + 12$
2. $x^2 - 9x + 18$
3. $x^2 - 4x - 21$
4. $x^2 + 8x - 48$
5. $x^2 + 12x + 36$
6. $x^2 - 81$
7. $x^2 - 144$
8. $2x^2 + 11x + 5$
9. $6x^2 - 16x + 8$
10. $2x^2 - 7x - 15$

Quadratic Equations—Factoring

Lesson 20

Topics in This Lesson:

- Factoring quadratic polynomials that have no constant
- Factoring the difference of two squares
- Factoring perfect trinomials

Summary:

In order to factor a polynomial that has no constant term, you factor out the greatest common factor and then set that factor, a plus or minus sign, and a zero in one set of parenthesis and what is left over from factoring in the other set of parentheses.

Perfect square trinomials occur when a binomial has been squared. To factor these trinomials quickly, look at the first term. Is it a perfect square? Look at the last term. Is it a perfect square? Now, look at the middle term. Is it two times the product of the square root of the first term and the square root of the last term? If so, you have a perfect square trinomial. Simply put the square roots of each term in parentheses and a plus or minus sign. You can write out two sets of parentheses or just one set raised to the power of two.

The first step in identifying a difference of two squares is that there is no middle term. If there is no middle term, check the sign of the constant. It must be negative. Finally, check the x^2-term and the constant. Are they both perfect squares? Then the equation is a difference of two squares. To factor this type of equation, simply write the square roots in the parentheses, one with a plus sign in front of the constant and the other with a negative sign.

Definitions and Formulas:

Constant term—the third term of a trinomial that has no variable in it

Perfect square trinomial—a trinomial (three terms) that can be written as the perfect square of a binomial (two terms)

Difference of two squares—an equation that has one squared term subtracted from another term that is a square. There is no middle term in a difference of two squares.

Examples from the Lesson:

Factor $5x^2 - 245$.

Is this a difference of two squares? There is no middle term, and the sign is negative, but the numbers are not perfect squares.

Notice that 5 is a factor of both $5x^2$ and 245. So it is a "common factor." Let's factor it out then and see what happens.

$$5x^2 - 245 = 5(x^2) - 5(49) = 5(x^2 - 49).$$

What is left, $x^2 - 49$, is a difference of two squares.

So our factorization is this:

$$5x^2 - 245 = 5(x^2 - 49) = 5(x - 7)(x + 7)$$

This problem is a mixture of "difference of two squares" and the "greatest common factor."

Additional Examples:

Factor $4x^2 - 28x + 49$.

We know this is not a difference of two squares because of the term $-28x$. Both the first and last terms are squares, so this might be a perfect square. Let's factor to see. We put the square roots of both terms in the parentheses.

$(2x \quad 7)(2x \quad 7)$

But what signs do we use? The constant term is positive, but the middle term is negative. We should use minus signs, as we want the middle term to add up to a negative number.

$(2x - 7)(2x - 7)$

If we multiply this out, we get $4x^2 - 14x - 14x + 49$.

When we combine, we get $4x^2 - 28x + 49$, which is exactly what we wanted. So our answer is

$(2x - 7)(2x - 7)$, or $(2x - 7)^2$

Common Errors:

- A difference of two squares will always have opposite signs in the two sets of parentheses. A perfect square will always have the same sign in both sets of parenthesis.
- Make sure you check for common factors in an equation that can be factored out before you determine that an equation cannot be factored.

Study Tips:

- There are two ways to be able to quickly determine if a trinomial is a perfect square of a binomial. You have a quadratic polynomial whose "squared term" and constant term are perfect squares (like x^2 and 9 or x^2 and 49) and the middle term is exactly two times the product of one factor from the x^2 term and one factor from the constant term, like $14x = 2(x)(7)$.
- Even if you do not recognize these special types of equations, they will all factor in the same way the other equations factored. You can check your work using the FOIL method as always.

Problems:

Factor the following.

1. $x^2 - 4x$

2. $3x^2 - 9x$

3. $6x^2 + 16x$

4. $x^2 + 10x + 25$

5. $x^2 + 14x + 49$

6. $4x^2 - 12x + 9$

7. $x^2 - 169$

8. $x^2 - 900$

9. $16x^2 - 49$

10. $50x^2 - 72$

Quadratic Equations—The Quadratic Formula

Lesson 21

Topics in This Lesson:

- Definition of the quadratic formula
- Solving equations using the quadratic formula

Summary:

Not all quadratic equations are easy to factor in the ways we have been factoring. A tool to use to solve these more difficult equations is the quadratic formula. A quadratic equation is of the form $ax^2 + bx + c = 0$. To use the formula, we just substitute the constants in our equation for the variables in the quadratic formula.

There are at most two solutions to a quadratic equation, since there are at most two x-intercepts on the graph. In order to find such solutions, you need to write the equation once with adding the radical (square root) and once with subtracting the radical.

Definitions and Formulas:

The quadratic formula— $x = \dfrac{-b \pm \sqrt{b^2 - 4ac}}{2a}$

Examples from the Lesson:

Solve the equation $7x^2 + 10x + 8 = 4x^2 + 2x + 11$.

Let's start by moving all the terms to the left side of the equation. Then we would have

$$3x^2 + 8x - 3 = 0$$

Let's go right to the quadratic formula. In this case, $a = 3$, $b = 8$, and $c = -3$. That means the solutions are

$$x = \frac{-(8) + \sqrt{(8)^2 - 4(3)(-3)}}{2(3)}$$
$$x = \frac{-8 + \sqrt{64 - (-36)}}{6}$$
$$x = \frac{-8 + \sqrt{100}}{6}$$
$$x = \frac{(-8) + (10)}{6}$$
$$x = \frac{2}{6}$$
$$x = \frac{1}{3}$$

and

$$x = \frac{-(8) - \sqrt{(8)^2 - 4(3)(-3)}}{2(3)}$$
$$x = \frac{-8 - \sqrt{64 - (-36)}}{6}$$
$$x = \frac{-8 - \sqrt{100}}{6}$$
$$x = \frac{(-8) - (10)}{6}$$
$$x = \frac{-18}{6}$$
$$x = -3$$

So our two solutions are $x = 1/3$ and $x = -3$. A quick peek at the graph of the equation $3x^2 + 8x - 3$ confirms our result.

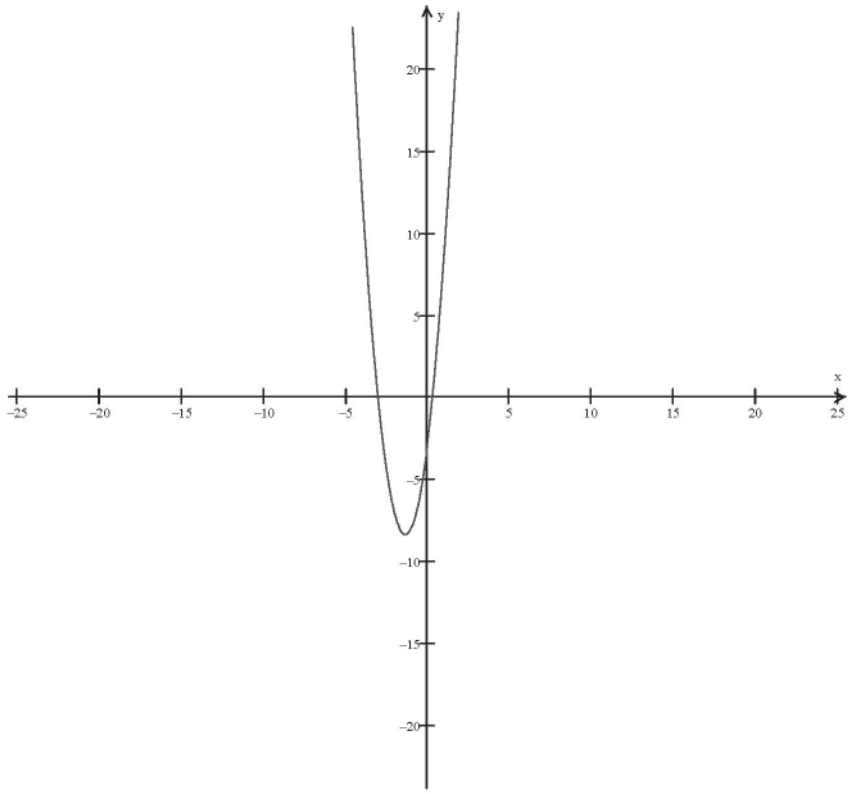

Notice that the two places where the graph appears to be crossing the x-axis are at $x = -3$ and $x = 1/3$.

Additional Examples:

Solve $-2x^2 + 15x + 17$.

This equation calls for the quadratic formula: $x = \dfrac{-b \pm \sqrt{b^2 - 4ac}}{2a}$.

In this example, $a = -2$, $b = 15$, and $c = 17$. When we substitute in our two equations, we get

$$x = \frac{-15 - \sqrt{15^2 - 4(-2)(17)}}{2(-2)}$$

and

$$x = \frac{-15 + \sqrt{15^2 - 4(-2)(17)}}{2(-2)}$$

Let's work out the equations.

$$x = \frac{-15 - \sqrt{15^2 - 4(-2)(17)}}{2(-2)}$$

$$x = \frac{-15 - \sqrt{225 - (-136)}}{-4}$$

$$x = \frac{-15 - \sqrt{361}}{-4}$$

$$x = \frac{-15 - 19}{-4}$$

$$x = \frac{-34}{-4}$$

$$x = \frac{17}{2}$$

$$x = \frac{-15 + \sqrt{15^2 - 4(-2)(17)}}{2(-2)}$$

$$x = \frac{-15 + \sqrt{225 - (-136)}}{-4}$$

$$x = \frac{-15 + \sqrt{361}}{-4}$$

$$x = \frac{-15 + 19}{-4}$$

$$x = \frac{+4}{-4}$$

$$x = -1$$

So our solutions are $x = -1$ and $x = 17/2$.

Common Errors:

- Watch all the different plus and minus signs in the formula. Make sure that you copy them correctly after each step.
- There are possibly two solutions for each quadratic equation. Do not forget to substitute in for both formulas!

Study Tips:

- Neat handwriting will really make a difference with your math work. The more complicated a problem, the more likely it is to produce an error. Do yourself a favor—write in tidy columns with neat handwriting.
- You can use a calculator to find square roots. However, it is a great idea to memorize the first 20 squares and square roots.

Problems:

Solve the following equations:

1. $x^2 - 3x + 1 = 0$
2. $x^2 + 9x + 20 = 0$
3. $6x^2 + 16x = 0$
4. $x^2 - 8x + 16 = 0$
5. $5x^2 + 11x + 2 = 0$
6. $x^2 + 6x + 12 = 0$
7. $x^2 - 5x - 8 = 0$
8. $6x^2 - 17x + 9 = 4x^2 - 14x + 3$
9. $-x^2 - 4x + 7 = 0$
10. $-x^2 + 6x - 9 = 0$

Quadratic Equations—Completing the Square

Lesson 22

Topics in This Lesson:

- Domain and range of a function
- Completing the square to solve quadratic equations

Summary:

One way to solve quadratic equations is to complete the square. This technique is really a way to rewrite a quadratic function in a very special form that tells us quite a bit about the "shape" of a quadratic function and its graph. When we complete the square, we are trying to find the x-value of the lowest or highest point of the graph.

The steps to complete the square are as follows. Your equation should be of the form $ax^2 + bx + c = 0$. Look at the b value. What constant could we add to $ax^2 + bx$ to make a perfect square? Insert both the negative and positive value of this number into your equation: $ax^2 + bx + c + n - n = 0$. Rewrite the equation so that the correct n-value (positive or negative) is next to the $ax^2 + bx$ terms and combine the other n-value with the constant: $(ax^2 + bx + n) + c - n = 0$. Factor the trinomial in parenthesis: $(x + m)(x + m) + c + n = 0$. Move the $(c + n)$ to the other side of the parenthesis and take the square root of both sides: $\sqrt{(x^2 + m)} = \pm\sqrt{c + n}$. You will need to have both a negative value and a positive value for the square root. Finally, solve for x.

Definitions and Formulas:

Function—a mathematical rule or relationship that assigns exactly one output value to each input value

Domain of a function—the set of input values that we can plug into the function

Range of a function—the set of output values of the function

Vertex—the highest or lowest point of a parabolic graph

Examples from the Lesson:

Solve the equation $x^2 - 10x = 23$.

Well, we know that the equation $x^2 - 10x = 23$ is the same as the equation $x^2 - 10x - 23 = 0$.

So we will work with the equation in this new form. Look at the first two terms of the equation: $x^2 - 10x$. What constant would we need to add to this to get a perfect square binomial? In other words, what value of a would we need so that $x^2 - 10x + a$ is a perfect square? -25 is the answer. We can always add 0 to an equation without changing the value, so let's add 0 by putting a -25 and a $+25$ in our equation.

$$x^2 - 10x - 23 + 25 - 25$$

And we can regroup

$$(x^2 - 10x + 25) - 23 - 25$$

And factor

$$(x - 5)(x - 5) - 48$$

So we can rewrite $x^2 - 10x - 23$ as $(x - 5)^2 - 48$.

That means our equation can now be written as

$$(x - 5)^2 - 48 = 0$$

or

$$(x - 5)^2 = 48$$

We can now take the square root of both sides of this equation to obtain

$$x - 5 = \pm\sqrt{48}$$

Now factor the 48 to see if any perfect squares are hiding inside it.

$$48 = 2 \times 24 = 2 \times 2 \times 12 = 2 \times 2 \times 2 \times 6 = 2 \times 2 \times 2 \times 2 \times 3$$

$$48 = 16 \times 3$$

$$\sqrt{48} = \sqrt{16} \times \sqrt{3}$$

$$= 4 \times \sqrt{3}$$

$$= 4\sqrt{3}$$

$$x - 5 = \pm 4\sqrt{3}$$

This means we really have two equations.

$$x - 5 = -4\sqrt{3} \text{ and } x - 5 = +4\sqrt{3}$$

Adding 5 to both sides of these equations gives

$$x = -4\sqrt{3} + 5 \text{ or } x = +4\sqrt{3} + 5$$

Both of these values are indeed solutions of the equation

$$x^2 - 10x = 23$$

Additional Examples:

Solve the equation $x^2 + 6x = 16$.

First rewrite the equation.

$$x^2 + 6x - 16 = 0$$

Now what constant do we need to add to make a perfect square? 6 is 3 + 3, so we must need to add a 9 (which is 3^2).

$$x^2 + 6x - 16 + 9 - 9$$

Regroup.

$$x^2 + 6x + 9 - 16 - 9$$

$$(x^2 + 6x + 9) - 16 - 9$$

$$(x + 3)(x + 3) - 25$$

So our equation can be written as

$$(x + 3)^2 - 25 = 0$$

And rewritten as

$$(x + 3)^2 = +25$$

Next take the square root of the equation. (Remember to do this twice, once with a positive value and once with a negative.)

$$\sqrt{(x+3)}^2 = +\sqrt{25}$$
$$x+3=+5$$
$$x=2$$

$$\sqrt{(x+3)}^2 = -\sqrt{25}$$
$$x+3=-5$$
$$x=-8$$

Both −8 and 2 are solutions to the equation. We can check this by plugging in these values to the original equation.

$$x^2+6x = 16$$
$$(-8)^2+6(-8)=16$$
$$64-48=16$$
$$16=16$$

$$x^2+6x = 16$$
$$(2)^2+6(2)=16$$
$$4+12=16$$
$$16=16$$

Common Errors:

- When you take the square root of both sides of an equation, you must allow for both a positive answer and a negative answer. This does not mean that the square root of a real number is a negative value. The square root of 9 is 3, period. Do not mix up the two ideas; square roots of positive real numbers are always positive, but the solutions of an equation where you have taken the square root of both sides can potentially be positive or negative.
- The constant term at the end is not needed to complete the square. You should not consider it when looking for the number that will complete the square.

Study Tips:

- Be very careful of your signs. A misplaced negative or positive sign can mess up the whole problem.
- Some students may find it easier to complete the square if they keep the equation in the form $ax^2 + bx = c$. For example, in the equation $x^2 + 22x = 15$, instead of moving the 15 to the other side, leave it where it is. Look at the left-hand side of the equation. What do you need to do to make it a square? Add a +121. Then simply add the number to both sides of the equation $x^2 + 22x + 121 = 15 + 121$ and then factor and combine terms: $(x + 11)^2 = 136$. You are now all set for taking the square root.
- Do not worry if you feel like this lesson is particularly hard and complicated. It is! The steps will become more natural as you practice. And, not all the rest of the topics in the course are as complex.

Problems:

Determine the smallest value of the following quadratic equations.

1. $f(x) = x^2 + 8x + 21$
2. $f(x) = x^2 + 10x + 13$

Use the method of completing the square to solve the following equations.

3. $x^2 + 2x - 7 = 0$
4. $x^2 + 12x + 32 = 0$
5. $x^2 + 16x + 61 = 0$
6. $x^2 + 7x - 1 = 0$
7. $5x^2 + 30x + 25 = 0$
8. $-x^2 + 8x + 13 = 0$
9. $x^2 + 4x + 9 = 0$
10. $2x^2 + 20x + 58 = 0$

Representations of Quadratic Functions

Lesson 23

Topics in This Lesson:

- Parabolas
- Graphing quadratic functions

Summary:

The graph of a quadratic function of the form $y = ax^2 + bx + c$ will be shaped like a parabola. In general, a parabola is a U-shaped graph; some of them open upward (and are sometimes referred to as *cups*), while others open downward (and are sometimes called *caps*). The orientation of the parabola is determined by the a value in front of the x^2-term. If $a > 0$, then the graph is a cup. If $a < 0$, then the graph is a cap.

In order to graph a quadratic function, you need to know several things. First of all, will the graph be a cap or a cup? Next you must find the x-intercepts by factoring the polynomial or using the quadratic formula. The y-intercept is found next. When you write the equation in the form $y = (x - a)^2 + b$, the ordered pair for the vertex is (a, b). Finally, you sketch the graph on the xy-plane.

Definitions and Formulas:

Parabola—a U-shape; the graphs of quadratic functions of the form $y = ax^2 + bx + c$ are shaped like parabolas

Vertex of a parabola—the unique lowest point (when $a > 0$) or unique highest point (when $a < 0$) of any parabola

Examples from the Lesson:

Sketch the graph of the equation $y = x^2 + 6x + 5$.

The first thing to ask—is this graph a cup or cap? Since the coefficient of x^2 is positive, the graph opens upward and is a cup. Now we need to factor to find the x-intercepts. (By the way, if the factoring is not "nice," then the x-intercepts are probably not going to be nice. Having the x-intercepts is not crucial—but they are convenient for "connecting the dots" if they can be found easily.)

In this case, our factoring is easy.

$$y = x^2 + 6x + 5$$

$$y = (x + 1)(x + 5)$$

What does that mean for x-intercepts? Well, again, we are going to set $y = 0$ and solve for x.

$$y = (x + 1)(x + 5)$$

$$0 = (x + 1)(x + 5)$$

Then $x + 1 = 0$ or $x + 5 = 0$.

So $x = -1$ or $x = -5$.

The two x-intercepts are at $(-1, 0)$ and $(-5, 0)$.

We know where the two x-intercepts are—they are both to the left of the origin. And we know the graph is going to open upward. In which quadrant does the vertex live? I, II, III, or IV? The answer is III. But what is that vertex? Let's complete the square to find out.

$$y = x^2 + 6x + 5$$

$$y = x^2 + 6x + 9 - 9 + 5$$

$$y = (x^2 + 6x + 9) - 9 + 5$$

$$y = (x + 3)^2 - 9 + 5$$

$$y = (x + 3)^2 - 4$$

The form of the equation of a parabola we considered before was

$$y = (x - a)^2 + b$$

and the vertex then had coordinates (a, b). We have $(x + 3)^2 - 4$. That means the coordinates of the vertex are $(-3, -4)$ which is in Quadrant III, so we are on the right track.

Once we have the vertex and the two x-intercepts in this example, we can sketch the graph pretty quickly.

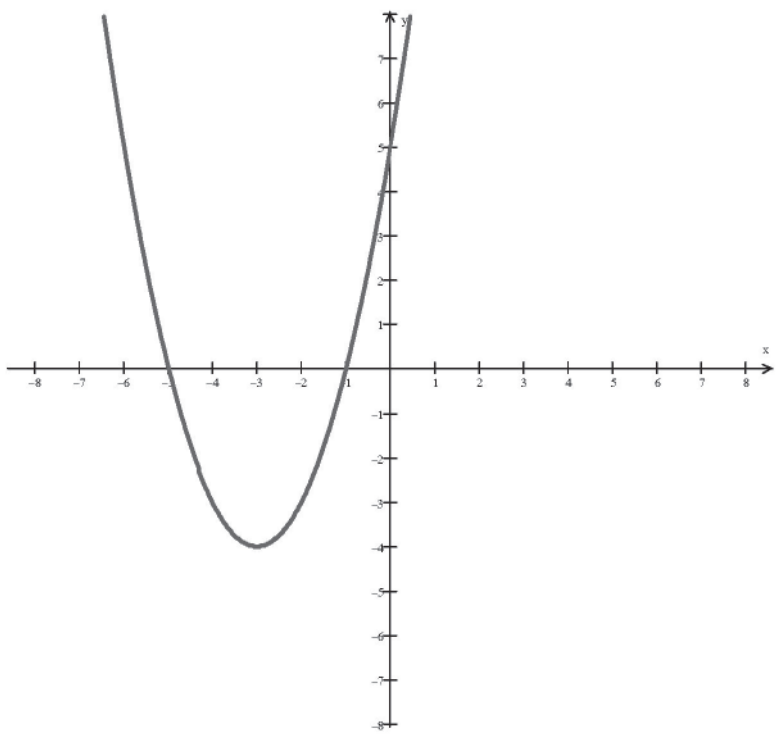

Notice that our plot has y-intercept $(0, 5)$. Is that the correct y-intercept here? Let's find the y-intercept, which is the point where $x = 0$. To find our y-intercept we go back to our original equation and set $x = 0$.

$$y = x^2 + 6x + 5$$

$$y = 0^2 + 6(0) + 5$$

$$y = 5$$

So we got the correct y-intercept.

Additional Examples:

Sketch the equation of the graph of $y = -x^2 - 8x - 22$.

Will this graph be a cup or cap? The coefficient of x^2 is -1, so the graph will open downward and be a cap.

Find the x-intercepts. Even though we might be able to factor this in the traditional way, let's use the quadratic formula: $a = -1$, $b = -8$, and $c = -22$.

$$x = \frac{-b \pm \sqrt{b^2 - 4ac}}{2a}$$

$$x = \frac{-(-8) + \sqrt{(-8)^2 - 4(-1)(-22)}}{2(-1)}$$

$$x = \frac{+8 + \sqrt{64 - 88}}{-2}$$

$$x = \frac{8 + \sqrt{-24}}{-2}$$

Since there is a negative number under the square root symbol, we know there is no solution. We can see that even when we change the equation to

$$x = \frac{8 - \sqrt{-24}}{-2}$$

we still cannot find an x-intercept, because the number under the square root symbol is still negative. This means there are no x-intercepts.

Now, let's find the y-intercept. All we have to do is plug in 0 for the x-value in our original equation.

$$y = -x^2 - 8x - 22$$

$$y = -(0)^2 - 8(0) - 22$$

$$y = -22$$

So our y-intercept is $(0, -22)$.

The final piece of information we need before we draw the graph is the vertex. We will need to complete the square.

$$-x^2 - 8x - 22$$

$$-(x^2 + 8x + 22)$$

$$-(x^2 + 8x + 16 - 16 + 22)$$

$$-(x^2 + 8x + 16) - 6$$

$$-(x + 4)^2 - 6$$

So the vertex is at $(-4, -6)$.

Here's a sketch of the graph.

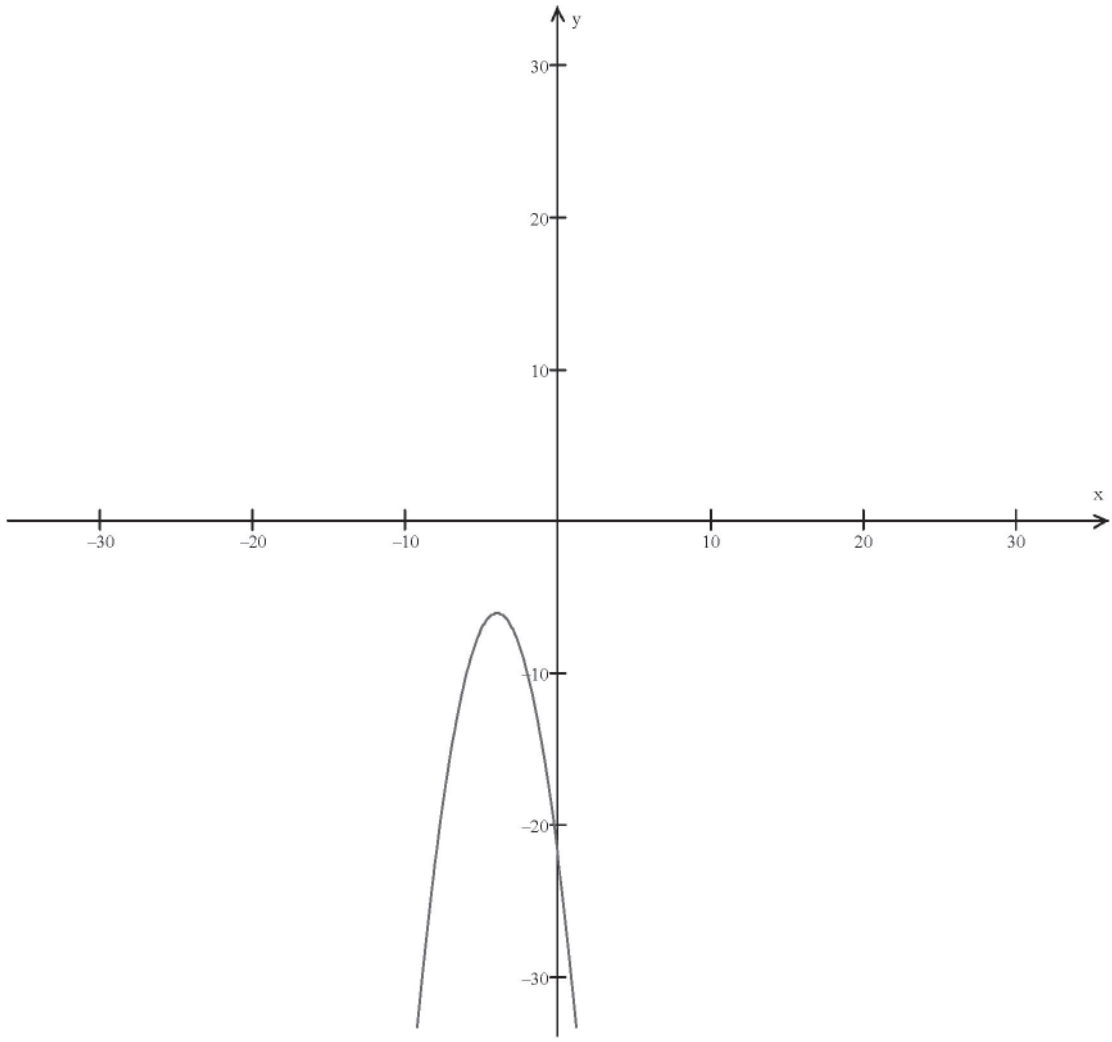

Common Errors:

- Don't forget! Any time you take the square root of both sides of the equation, you need to have a positive and a negative answer. In other words, you have to solve the equation twice and you may get two different answers.

Study Tips:

- There are a many steps involved in graphing a quadratic equation. Before you begin your homework, make a checklist of the steps and refer to it as you do your work. That way, you won't leave out a step.

  Determine if graph is cup or cap.

  Find x-intercepts (remember positive and negative square root answers!).

  Find y-intercept.

  Find vertex.

  Graph the equation.

For Review:

- Check out Lesson Twenty-One for a review of the quadratic formula.
- Still struggling with completing the square? Review Lesson Twenty-Two.

Problems:

Sketch the graph of each of the following quadratic equations.

1. $y = x^2 + 8x + 7$
2. $y = x^2 - 4x + 9$
3. $y = -x^2 + 6x - 9$
4. $y = (x+1)^2$
5. $y = -(x+3)^2 - 4$
6. $y = -x^2 + 3x$
7. $y = x^2 - 4$
8. $y = -x^2 - 2$
9. $y = (x-3)(x-5)$
10. $y = -(x-1)(x+2)$

Quadratic Equations in the Real World

Lesson 24

Topics in This Lesson:

- Using quadratic equations to solve real-world problems

Summary:

Quadratic equations are not just something that mathematicians dreamed up. They have many practical uses in the everyday world. Knowing how to translate a real-world situation into a quadratic equation and how to solve this equation will help you.

Examples from the Lesson:

A small rectangular box has a volume of 280 cm^3. The dimensions of the box are 4 cm by x cm by $(x + 3)$ cm. Find the value of x (which can be thought of as the length of one particular side of the box).

A sketch of a related picture can be very helpful. Draw a three-dimensional box. Next label the drawing with sides of length 4, x, and $x + 3$, since these are the three lengths or dimensions of the box.

We know that the volume of the box is 280 cm^3. That means we need a formula for the volume of a box that is $V = lwh$, where

V = volume of a rectangular box

l = length of the box

w = width of the box

h = height of the box

Now we plug in our values. $V = 4x(x + 3)$ from the information we know (that's using $V = lwh$). But we also know $V = 280$ in this problem. So we can equate these two quantities for V to get

$$4x(x + 3) = 280$$

Notice that we can get rid of that 4 on the left-hand side by dividing both sides by 4.

$$x(x + 3) = 70$$

Now we want to solve for x. Expand the left-hand side and move the 70 over to the left-hand side.

$$x^2 + 3x = 70$$

$$x^2 + 3x - 70 = 0$$

We could use the quadratic formula or completing the square or factoring to solve for x. Let's try the most simple thing first, factoring.

$$x^2 + 3x - 70 = 0$$

$$(x + 10)(x - 7) = 0$$

Let's keep going. This means that

$$x + 10 = 0 \text{ or } x - 7 = 0$$

$$x = -10 \text{ or } x = 7$$

Now which answer is correct? Well, remember that x is one of the dimensions of the box. Can we have a negative dimension? Of course not! So $x = -10$ is definitely not the right answer in the context of this problem. Therefore, the answer must be $x = 7$ cm.

We can check this quickly: The volume of the box is given by

$$V = 4x(x + 3)$$

Replacing x by 7 in this formula yields

$$V$$
$$= 4(7)(7 + 3)$$
$$= 28(10)$$
$$= 280$$

and 280 was the value for the volume that we were given in the original problem.

Additional Examples:

We are going to build a square parking lot. Each parking space requires 50 sq ft. How large does the square parking lot need to be to include 200 parking spaces?

First define some variables and draw a sketch. Our parking lot is a square, so we can label both sides as x. The formula for the area of a square is length times width. Since both our length and width are represented by x, we can write x times x or x^2.

$$\text{Area} = x^2$$

We also know that minimum size of the area has to hold 200 parking spaces at 50 ft each. So our area can also be represented by 200 times 50 or Area = 200×50 ft^2 = 10,000 ft^2.

Using these two pieces of data, we can set up an equation.

$$\text{Area} = x^2$$
$$\text{Area} = 10{,}000 \text{ ft}^2$$
$$x^2 = 10{,}000 \text{ ft}^2$$

We want to solve for x. The easiest way to do this is to take the square root of both sides. Remember, we need to have both a negative and positive answer when we take the square root!

$$\sqrt{x^2} = +\sqrt{10{,}000}$$
$$x = 100$$

$$\sqrt{x^2} = -\sqrt{10{,}000}$$
$$x = -100$$

Our two possible answers for x are 100 and −100. Which one makes sense? Since x is the measure of a side of a parking lot, it would not be −100. So the answer must be 100.

Our original question asked how large the square parking lot needed to be. The answer is that each side must be 100 ft in length.

Common Errors:

- Once you have an answer, make sure you check your original problem to see if you answered the correct question.

Study Tips:

- When you have finished the problem, ask yourself, "Does this answer make sense?" If you were trying to find the volume of water in half of a two-liter bottle, and your answer was −69.52 liters, you can bet that a calculation is wrong somewhere.
- Translating real-world or story problems into formulas can be confusing. Drawing a picture often helps you to see what is being asked and what the final answer might be. Assigning well-defined variables also makes the problem easier to understand.

Problems:

1. A cardboard box is to be made that is exactly 10 inches high. The length of the box is to be 4 inches longer than the width of the box.
2. Using the equation in problem 1, determine the volume of a box whose length is 12 inches.
3. Using the equation in problem 1, determine the volume of a box whose width is half a foot.
4. Using the equation in problem 1, determine the dimensions of such a box with total volume 450 in^3.
5. The volume of a cylinder is given by $V = \pi r^2 h$ where r is the radius of the cylinder and h is height. In particular, if the raduis of the cylinder is 8 cm and the height is 6 cm, then the volume is given by $V = 6\pi 8^2$ which is a quadratic equation.
6. Find the radius of a cylinder with a height of 6 cm and a volume of 7,536 cm^3.

The Pythagorean Theorem

Lesson 25

Topics in This Lesson:

- Right triangles
- Hypotenuse
- Pythagorean Theorem

Summary:

A right triangle contains a 90° angle. The side opposite the 90° angle is called the *hypotenuse*. The other two sides are called *legs*. The legs of a right triangle are usually labeled with a and b, and the hypotenuse is labeled with c.

The Pythagorean Theorem allows us to solve problems involving right triangles. It states that if we square the length of the two legs and add them together, their sum is equal to the length of the hypotenuse squared.

Definitions and Formulas:

Right triangle—a triangle where one of the angles is a "right angle" or 90° angle

Hypotenuse—the side of the triangle that is opposite the right angle. It is also the longest side of a right triangle.

Legs of a triangle—the other two sides of the triangle that are not the hypotenuse

Pythagorean Theorem—in any right triangle, the sum of the squares of the lengths of the legs equals the square of the length of the hypotenuse: $a^2 + b^2 = c^2$

Examples from the Lesson:

Assume we have a right triangle where the length of the hypotenuse is 26 and the length of the shorter leg is 10. Find the length of the longer leg.

Well, using the notation we have been using up to now, we have $a = 10$, $c = 26$, and we want to find b.

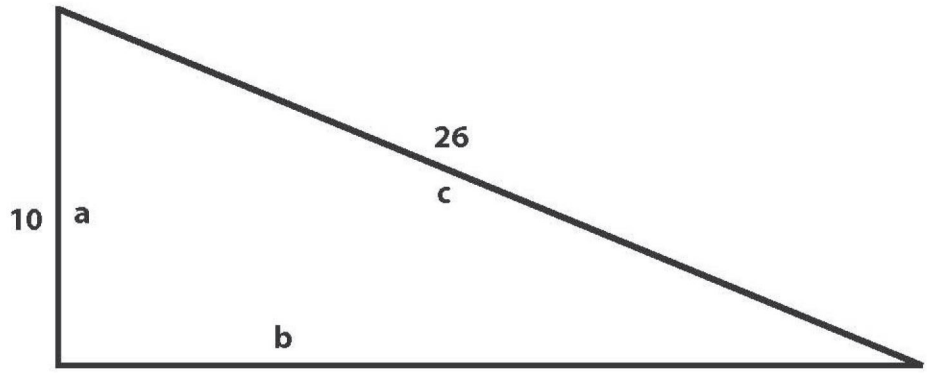

Thanks to the Pythagorean Theorem, we know that

$$a^2 + b^2 = c^2$$

$$10^2 + b^2 = 26^2$$

$$100 + b^2 = 676$$

$$b^2 = 676 - 100$$

$$b^2 = 576$$

So we know that $b = \sqrt{576}$. But what is $\sqrt{576}$? How might we find it? Well, one useful idea is to factor 576 until we begin to see some perfect squares.

$$576 = 2 \times 288 = 2 \times 2 \times 144 = 2 \times 2 \times 12 \times 12 = 24 \times 24 = 24^2$$

Ah, now we know that $\sqrt{576} = \sqrt{24^2}$. Therefore,

$$\text{b} = \sqrt{24^2} = 24$$

So the length of the longer leg is 24.

Notice that 24 < 26. That's a good sign because the hypotenuse of a right triangle must always be longer than either of the other two legs.

Additional Examples:

You have a triangle with sides of 9 cm and 12 cm. What is the length of the hypotenuse?

It helps to draw a picture and label it. But, which sides are which? We know that the longest side is the hypotenuse, and it belongs across from the right angle. We do not know the measurement for this side, so we will just label it as *c*. The other sides have lengths 9 cm and 12 cm. It does not matter which leg gets which measurement as long as neither is assigned to the hypotenuse.

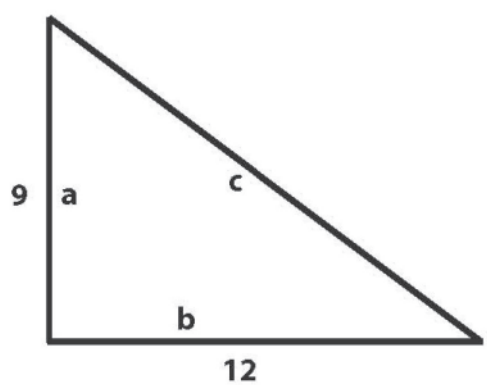

Now, we simply plug the values into the Pythagorean Theorem and solve for the missing variable.

$$a^2 + b^2 = c^2$$

$$9^2 + 12^2 = c^2$$

$$81 + 144 = c^2$$

$$225 = c^2$$

Now we need to take the square root of both sides to solve for c.

$$\sqrt{225} = \sqrt{c^2}$$
$$15 = c$$

The length of the hypotenuse is 15 cm.

Common Errors:

- The hypotenuse is the longest side of the triangle, and it is always across from the 90° angle.
- You cannot have a negative value for one of the sides of a triangle since these numbers represent length.
- Don't forget! If your variable is still squared, you have not solved the problem. The problem is not finished until the variable is by itself.

Study Tips:

- Draw a picture of the triangle and label all the information you have. It will help to keep things clear.

Problems:

Determine whether or not the following three numbers can serve as the leg lengths of a right triangle.

1. 8, 15, 17
2. 7, 12, 15
3. 9, 40, 41
4. 45, 55, 65

Determine the missing leg length necessary so that a right triangle is formed.

5. 15, b, 39
6. a, 63, 65
7. 10, b, 15
8. 4, 10, c
9. Determine whether there exists a right triangle where the length of the hypotenuse is 11 and the two leg lengths are exactly one unit apart and are whole numbers.
10. Determine whether there exists a right triangle where the length of the hypotenuse is 87 and the two leg lengths are exactly three units apart.

Polynomials of Higher Degree

Lesson 26

Topics in This Lesson:

- Polynomial definition
- Degree of a polynomial
- Leading coefficient
- Graphs of polynomials

Summary:

The word *polynomial* comes from two Latin roots, *poly*, which means "many," and *nomial*, which means "number." Therefore, a polynomial represents many numbers. In algebra, polynomials also include variables, some of which may be raised to powers. These powers must be positive numbers.

When we list the terms in polynomials, we often list them from the greatest power to the least power, but they do not have to be written in that order. The degree of the polynomial is the largest power in the polynomial. The leading coefficient is the number (coefficient) in front of the variable with the greatest power.

Graphs of polynomials are always continuous curves (no breaks) and also will not have any sharp corners (V-shapes). Every real number is in the domain of any polynomial. That means you are allowed to plug in any real number into a polynomial and it will make sense. This fact is what prevents any breaks in the graph. The number of x-intercepts of a polynomial is at most the degree of the polynomial. This number does not have to be equal to the degree, just less than or equal to the degree. If the degree of the polynomial is even, then both ends either go up or both ends go down (as in a parabola), depending on the sign of the leading coefficient.

Definitions and Formulas:

Polynomial (in the variable x)—an expression of the form $a_0 + a_1x + a_2x^2 + \ldots + a_nx^n$ where each of the a_0, a_1, a_2, …, a_n are numbers (which could be positive, negative, or zero) and the powers on all the x's are positive integers.

In other words, a polynomial is a number plus or minus a number with a variable plus or minus another number with a variable that has a positive exponent plus or minus another number with a variable that has a different positive exponent, and so on.

Degree of a polynomial—the largest power in the polynomial

Leading coefficient—the coefficient (number) in front of the term that contains the largest power of x

Examples from the Lesson:

Find the degree of the polynomial.

$$14x^5 + 23x^4 - 102x + 19$$

Since the largest power is x^5, the degree of the polynomial is 5.

$$1 + 3x + 4x^2 - 8x^3$$

Since the largest power is x^3, the degree of the polynomial is 3.

$$2 - 10x + 8x^4 - 5x^2$$

Since the largest power is x^4, the degree of the polynomial is 4.

Additional Examples:

Determine if the following are polynomials.

$2x + 5$

Yes, because the x (or x^1) has a positive power of 1.

$3x^{1/4} - 2x + 7$

No, because the power 1/4 is not a whole number.

$6x - 3x^{-3}$

No, because a polynomial cannot have a negative power.

$4x - 5 + 34x^{2} - 5x^{15}$

Yes, even though they are not written in descending order, the powers are all positive, real numbers.

$\sqrt{x}$

No, because $\sqrt{x} = x^{\frac{1}{2}}$ and 1/2 is not an integer.

Common Errors:

- Make sure that when you are deciding the degree of the polynomial you look at all the powers. The highest power may or may not be listed first.
- The leading coefficient belongs to the variable with the highest degree, not with the first variable in the polynomial.

Study Tips:

- Rewriting a polynomial in descending order (largest power to smallest power) is always allowed. Just make sure that you do not change any of the signs of the coefficients.

Problems:

Determine which of the following is a polynomial. For those that are polynomials, state the degree and leading coefficient.

1. $5x^6 - 14x^4 + 27x$
2. $\sqrt{13}x^5 + 10x^3$
3. $2x^{12} - 10x^5 + 27x^{-3}$
4. $5x^2 + 7\sqrt{x}$
5. $15x^6 - 18x^9 + 27x^8$
6. $\dfrac{2x^3 + 1}{4x^2 - 3}$

Graph the polynomial.

7. $5x^6 - 14x^4 + 27x$
8. $13x^3 - 12x^2 + x$
9. $-3x^4 + 4x^3$
10. $-6x^5 + 9x^2 + 1$

Operations and Polynomials

Lesson 27

Topics in This Lesson:

- Adding, subtracting, multiplying, and dividing polynomials

Summary:

To add polynomials, simply combine like terms. To subtract polynomials, change the signs of all the terms in the second polynomial and then combine like terms. Addition and subtraction will not change the degree of the polynomial.

When you multiply polynomials, you distribute each term in the polynomial with each term in the other polynomial. The coefficients are multiplied, but the exponents are added.

To divide polynomials, set up a division bar and place the second term outside the bar (this is the divisor) and the first term inside (this is the dividend). If any powers of the variable are missing, you need to write them in with 0 as the coefficient of that term. Look at the first term of the dividend. How many times will the divisor go into this term? Write the variable on the line above the first term and multiply all the terms of the divisor by this value and write the answer under the dividend. Change the signs of the result, combine like terms, and repeat the process until all the terms have been divided. If you have a number left over, it is a remainder.

Examples from the Lesson:

Expand $(x^2 + 2x + 3)(x^2 - 4x - 6)$.

Each term in the first set of parentheses must be multiplied with each term in the second set of parentheses. So that is going to give us nine different terms before we combine the like terms. So here goes:

$$x^2(x^2) + x^2(-4x) + x^2(-6) + 2x(x^2) + 2x(-4x) + 2x(-6) + 3(x^2) + 3(-4x) + 3(-6)$$

$$= x^4 - 4x^3 - 6x^2 + 2x^3 - 8x^2 - 12x + 3x^2 - 12x - 18$$

$$= x^4 - 2x^3 - 11x^2 - 24x - 18$$

Additional Examples:

Simplify $x^3 + 5x + 6 \div (x + 1)$.

Since one of the terms is missing, x^2, we need to make sure to write it in when we write out the dividend. Remember to use 0 as the coefficient.

$$x+1\overline{\big)\,x^3+0x^2+5x+6}$$

Now divide.

$$\begin{array}{r}
x^2-x+6 \\
x+1\overline{\big)\,x^3+0x^2+5x+6} \\
\underline{x^3+x^2} \\
-1x^2+5x \\
\underline{-x^2-1x} \\
6x+6 \\
\underline{6x+6} \\
0
\end{array}$$

The final answer is $x^2 - x + 6$.

Common Errors:

- Do not add or subtract exponents when adding or subtracting polynomials. The exponents stay the same in those problems.
- When you multiply polynomials, you add the exponents. Do not multiply them!
- When doing long division of polynomials, make sure that you keep the positive and negative signs in your answer on top of the division bar!
- If one of the terms of a dividend is missing, it must be written in with 0 for the coefficient. For example, $3x^3 - 2x + 7$ can be rewritten as $3x^3 + 0x^2 - 2x + 7$.

Study Tips:

- When combining like terms, it helps to rewrite the polynomials so that like terms are lined up vertically. Then add down the columns. This can be done for addition and subtraction. (Don't forget to change all the signs of the second polynomial when you subtract!)
- You can write multiplication of polynomials vertically in the same way you would write multiplication of multi-digit numbers. Simply multiply each term as you would each number and write the answer on the line below. You can even line up like terms this way for easy combining down the columns.

$(4x^2 - 4x + 5)(2x^2 - 3)$

$$\begin{array}{r} 4x^2 - 4x + 5 \\ \underline{2x^2 - 3} \\ -12x^2 + 12x - 15 \\ \underline{8x^4 - 8x^3 + 10x^2 } \\ 8x^4 - 8x^3 - 2x^2 + 12x - 15 \end{array}$$

Problems:

Perform the indicated operations.

1. $(5x^6 - 14x^4 + 27x) + (4x^6 + x^5 + 3x^4 + 9)$
2. $(2x^3 - 10x^2 + 7x - 4) + (5x^3 + 3x^2 - 19x - 10)$
3. $(2x^4 + 7x - 14) - (5x^3 - 13x - 15)$
4. $(2x^5 + x^3 - 8x) - (-2x^5 - 9x^3 + 7x)$
5. $7x(4x^6 - x^5 + 3x^4 - 5)$
6. $(5x^2 - 4x)(x + 1)$
7. $(3x^4 - 7x^2)(2x^3 + 5x)$
8. $(x^4 - x^2 + 3)(4x^3 + 2x^2 + 5)$
9. $(2x^2 - x - 15) \div (x - 3)$
10. $(5x^2 + 3x - 1) \div (x + 2)$

Rational Expressions, Part 1

Lesson 28

Topics in This Lesson:

- Rational expressions
- Simplifying rational expressions
- Adding and subtracting rational expressions
- Finding common denominators for rational expressions

Summary:

To simplify a rational expression, look for like terms in the numerator and denominator and cancel them. Get the numerator and denominator separated into factors. This will allow you to see what can be cancelled. When you have finished simplifying, there is no need to multiply the factors together again.

When you want to add or subtract rational expressions, you have to get "common denominators" before the adding or subtracting can be done (as when you add or subtract numerical fractions). When you add, the denominator stays the same, and terms in the numerators are combined. When you subtract, the denominator stays the same, you change all the signs of the terms in the second expression's numerator, and then combine the terms in both numerators. Once you have finished adding or subtracting, look for terms in the numerator and denominator that can be cancelled to simplify your answer.

To get a common denominator, either multiply the entire rational expression by a fraction made by putting the denominator of the other expression over itself—for example, $(x + 4)(x + 4)$—or by finding the least common denominator by listing factors of the two denominators and multiplying those common factors together.

Definitions and Formulas:

Rational expression—a "ratio" of two polynomials; one polynomial divided by another polynomial

Examples from the Lesson:

Simplify $(5x - 10) / (x^2 - 4)$.

First we need to factor both top and bottom of this rational expression. The numerator factors as $5(x - 2)$. The denominator is a difference of two squares and factors as $(x - 2)(x + 2)$.

Therefore, our rational expression is the same as $5(x - 2) / ((x - 2)(x + 2))$. The two $(x - 2)$ will cancel, leaving us with $5/(x + 2)$ as our final answer.

Additional Examples:

Simplify $\dfrac{4x+8}{2x^2-4x-6} - \dfrac{-x+1}{x-3}$

The first thing we need to do is get a common denominator. Factor the first denominator.

$2x^2 - 4x - 6$

$(2x + 2)(x - 3)$

We see that the $x - 3$ term is in common, so we just need to multiply the second fraction by $(2x + 2) / (2x + 2)$ (which is just 1).

$$\frac{-x+1}{x-3}\left(\frac{2x+2}{2x+2}\right)$$
$$=\frac{-2x^2+2}{(x-3)(2x+2)}$$

Now we can subtract. Don't forget to change all the signs of the second numerator before you combine like terms!

$$\frac{4x-8}{2x^2-4x-6}-\frac{-2x+2}{(x-3)(2x+2)}$$
$$\frac{4x-8}{(x-3)(2x+2)}+\frac{+2x-2}{(x-3)(2x+2)}$$
$$\frac{6x-6}{(x-3)(2x+2)}$$

Are we done? Let's check for things we can cancel to further simplify the expression.

$6x - 6$ will reduce. We can pull a 6 out of it to get $6(x - 1)$. But that does not cancel with anything in the denominator. If we pull a 3 out of the numerator, we get $3(2x - 2)$. This still will not cancel, as we would have $2x - 2$ in the numerator and $2x + 2$ in the denominator.

So our final answer is

$$\frac{6x-6}{(x-3)(2x+2)}$$

Common Errors:

- You can only factor terms if the whole term is a factor, not just part of the term. For example, if the rational expression were $(3x + 5x)/3x$, you could not just cancel the $3x$ and be left with $1 + 5x$.
- When you cancel a term, what is left in its place is a 1. Do not think that cancelling leaves you with 0.
- Only the signs in the numerator change when subtracting rational expressions. The signs in the denominator (and the denominator itself) remain the same.

Study Tips:

- If you do not know how to find a least common factor, you can always just multiply the two denominators together. This means that you will have to do more work in simplifying and cancelling than you would if you had found the least common denominator, but it works just as well.

Problems:

Simplify the following.

1. $\dfrac{x(x+1)(x-3)(x-4)}{(x+1)(x+2)(x+3)}$

2. $\dfrac{5x+20}{3x+12}$

3. $\dfrac{6x-18}{x^2-9}$

4. $\dfrac{x^2+8x-20}{x^2-9x+14}$

5. $\dfrac{x^3+6x}{3x}$

6. $\dfrac{x^2}{x^2+4x}$

7. $\dfrac{6x^2}{4x+1}+\dfrac{3x^2}{4x+1}$

8. $\dfrac{3x-7}{5x-2}-\dfrac{2x+4}{5x-2}$

9. $\dfrac{3x}{x+1}+\dfrac{5x}{x-2}$

10. $\dfrac{3}{x-1}+\dfrac{5}{2x-1}$

Rational Expressions, Part 2

Lesson 29

Topics in This Lesson:

- Multiplication of rational expressions
- Division of rational expressions

Summary:

When multiplying rational expressions, you multiply the numerators together and then the denominators. Before you begin your multiplication, look for factors that cancel. After you have finished multiplying, look again for factors that will cancel.

To divide rational expressions, flip the second expression and multiply. After the flip, factor the terms and look for things that will cancel. After the multiplication, continue to look for ways to simplify the expression. You do not need to multiply out the factors.

Examples from the Lesson:

Multiply $\left(\frac{(3x+7)}{(5x+10)}\right)\left(x^2+7x+10\right)$

OK, how do we handle multiplying a rational expression by a polynomial? Just write the polynomial as a rational expression by giving it a denominator of 1. Then we have

$$\left(\frac{(3x+7)}{(5x+10)}\right)\frac{(x^2+7x+10)}{1}$$

Then we can multiple the numerators and denominators. But before doing so, let's see if there is any cancellation that we can do. So let's factor.

$$\left(\frac{(3x+7)}{(5x+10)}\right)\frac{(x^2+7x+10)}{1}$$
$$=\left(\frac{(3x+7)}{5(x+2)}\right)\frac{(x+5)(x+2)}{1}$$
$$=\frac{(3x+7)(x+5)}{5}$$

Remember: Those 5s cannot cancel! So our final answer is

$(3x + 7)(x + 5) / 5$

Additional Examples:

Divide $\dfrac{2x^2-8x-10}{3x-3} \div \dfrac{2x+2}{x^2+5x-6}$

When we divide fractions, we flip the second fraction and multiply. This is true for rational expressions as well.

$$\frac{2x^2-8x-10}{3x-3} \div \frac{2x+2}{x^2+5x-6}$$
$$\frac{2x^2-8x-10}{3x-3} \times \frac{x^2+5x-6}{2x+2}$$

Now we can factor and look for terms that cancel.

$$\frac{2x^2-8x-10}{3x-3} \times \frac{x^2+5x-6}{2x+2}$$
$$= \frac{(2x+2)(x-5)}{3(x-1)} \times \frac{(x-1)(x+6)}{(2x+2)}$$
$$= \frac{x-5}{3} \times \frac{x+6}{1}$$
$$= \frac{(x-5)(x+6)}{3}$$

Common Errors:

- When you multiply variables with powers, add the exponents.
- Do not forget that when you divide rational expressions, you must flip the second term and then multiply.
- You cannot cancel a term unless it is being multiplied. For example, you could not cancel the 6 in $x + 6$, but you could cancel the 6 in $6x$.

Study Tips:

- Whenever possible, you should always leave an answer in factored form.
- Sometimes factoring an expression will yield a term to cancel. Sometimes you should not factor it out the whole way. For example, $3x + 3$ might be a factor. If you have factored it to $3(x + 1)$ in the other rational expression, you might miss the cancellation. Be careful!

Problems:

Simplify the following.

1. $\dfrac{12x^2}{25} \cdot \dfrac{5}{21x^6}$

2. $\dfrac{4x+1}{20x+40} \cdot \dfrac{3x+6}{16x^2-1}$

3. $\dfrac{x^2-4}{x^2+4x+4} \cdot \dfrac{x^2-x-6}{x^2-9}$

4. $\dfrac{5x+2}{6x+4}\cdot(9x^2-4)$

5. $\dfrac{x^2-9x+18}{10x-30}\cdot\dfrac{2}{x^2-36}$

6. $\dfrac{x^2+x-20}{2x-10}\div\dfrac{1}{x^2-25}$

7. $\dfrac{x^2+5x-24}{x-3}\div\dfrac{x^2+16x+64}{x-4}$

8. $\dfrac{x^2+9x+20}{x-1}\div(x+5)$

9. $\dfrac{\dfrac{3x^2-x-2}{9x^2-4}}{\dfrac{2x+5}{3x-2}}$

10. $\dfrac{\dfrac{x+2}{x-1}+\dfrac{x-2}{x+1}}{\dfrac{x+3}{x-1}+\dfrac{x-3}{x+1}}$

Graphing Rational Functions, Part 1

Lesson 30

Topics in This Lesson:

- x-intercepts of graphs of rational functions
- Vertical asymptotes
- Horizontal asymptotes

Summary:

The graphs of rational functions look different than the other graphs we have studied in this course. In order to graph them, the first thing you should do is find the x-intercepts. First simplify the expression by cancelling like terms on the top and bottom. Next set the rational function equal to 0. Get rid of the denominator. When you multiply both sides of the equation by the denominator, the zero side still stays 0. So you really just have to set the numerator equal to 0 and solve.

After you have cancelled all the like terms in your expression, there may be some number or numbers that make the expression undefined. The numbers that you plug in to make the denominator 0 indicate the vertical asymptote(s).

The horizontal asymptote is found by considering the dominant term in both the numerator and denominator and studying their ratio. If the exponents of both variables are the same, then the horizontal asymptote is the ratio of the two leading coefficients. If the denominator has a larger exponent, then the horizontal asymptote is 0. If the denominator's exponent is smaller, then there is no horizontal asymptote.

Definitions and Formulas:

Vertical asymptotes—if $x = c$ is a vertical asymptote of the graph of a function, then as the values of x get really close to c, the values of the function grow "huge" (either going to +infinity or –infinity). In other words, the vertical asymptote is the line near which the graph makes a sharp turn. It is not actually on the graph.

To find a vertical asymptote, look for those values of x where the denominator equals 0 after cancelling out anything that can be cancelled in the original expression.

Horizontal asymptotes—horizontal asymptotes for graphs of functions act like "borders" or "guides" for the graphs when the x-values are large, in either a positive or negative direction

To find a horizontal asymptote, look at the dominant terms of the equation. If the exponents of the variables are the same, then the horizontal asymptote is the ratio of the two leading coefficients. If the exponent in the numerator is larger than the exponent of the denominator, then there is no horizontal asymptote. If the exponent in the numerator is smaller than the one in the denominator, the horizontal asymptote is $y = 0$.

Dominant term—the term in a polynomial that has the highest degree

Examples from the Lesson:

Find the x-intercept(s) of

$$y = (x - 5)(x + 3) / ((x - 5)(x + 7))$$

First see if there are any cancellations. The $x - 5$ factors must be cancelled first before we do anything else. Also, we need to remember that we cannot plug in $x = 5$ in this equation because the equation is undefined at $x = 5$. We could also say it this way: the number 5 is not in the domain of the original function because plugging in 5 in the original function would cause division by 0.

So in the graph, there will be an open circle at $x = 5$. This is a small but very important point to make.

We can now rewrite the equation as $y = (x + 3) / (x + 7)$. From here we set the numerator equal to 0 to find the x-intercepts.

$$x + 3 = 0$$

$$x = -3$$

So there is just one x-intercept, $x = -3$. Here's a quick sketch of the graph to confirm this.

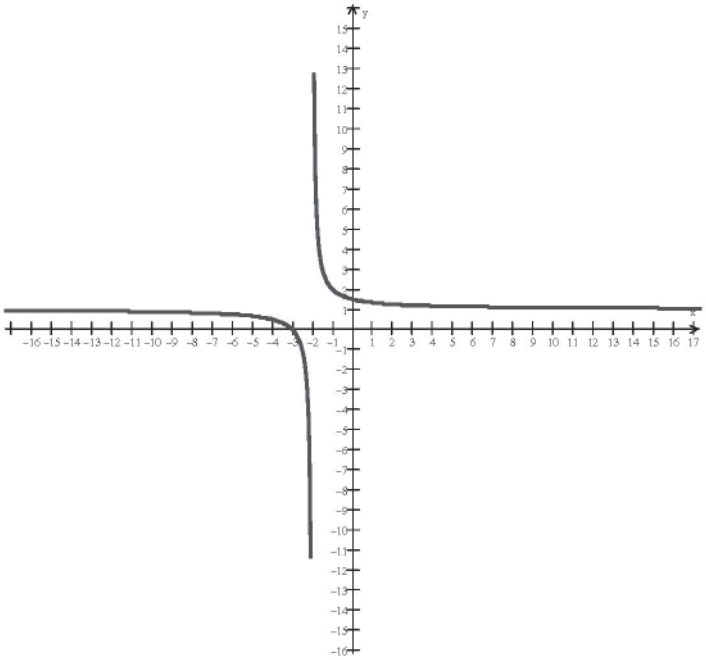

Additional Examples:

Find the horizontal and vertical asymptotes of

$$\frac{3x^2 - 12}{x^2 + 6x + 8}$$

First let's try to factor and cancel any terms.

$$\frac{3x^2 - 12}{x^2 + 6x + 8}$$
$$= \frac{3(x^2 - 4)}{(x+2)(x+4)}$$
$$= \frac{3(x+2)(x-2)}{(x+2)(x+4)}$$
$$= \frac{3(x-2)}{x+4}$$
$$= \frac{3x-6}{x+4}$$

Now, let's find the vertical asymptote. This would be the number we would plug in that makes our equation equal to 0, and therefore undefined.

$$\frac{3x-6}{x+4}$$

If we substituted −4 for x, we would have a 0 in the denominator. Therefore, $x = -4$ is the vertical asymptote.

The horizontal asymptote is found by making a ratio of the dominant terms, which are $3x$ and x.

$$\frac{3x}{x}$$

Since the exponents of the variables are the same, we know the horizontal asymptote is a ratio of the coefficients: 3, 1. Therefore, the horizontal asymptote is $y = 3/1$ or $y = 3$.

Common Errors:

- If you do not cancel all the like terms in the expression, then your calculations for horizontal and vertical asymptotes may be incorrect.

Problems:

Find the x-intercept(s) of the graph of each of the following.

1. $y = \dfrac{(x+1)(x-1)(x+2)(x+5)^2}{x(x+4)(x-3)}$

2. $y = \dfrac{x^2-12x+35}{x^2-4}$

3. $y = \dfrac{5}{x^2-9}$

4. $y = \dfrac{(x-2)(x+7)}{(x-2)(x+5)}$

Find the vertical asymptotes of each of the following.

5. $y = \dfrac{(x+1)(x-1)(x+2)(x+5)^2}{x(x+4)(x-3)}$

6. $y = \dfrac{x^2-12x+35}{x^2-4}$

7. $y = \dfrac{(x-2)(x+7)}{(x-2)(x+5)}$

Find the horizontal asymptote (if any) for the graph of each of the following.

8. $y = \dfrac{5x^2-12x+35}{3x^2-4}$

9. $y = \dfrac{5x^2-17x+5}{2x^3-41}$

10. $y = \dfrac{x^6+7x^4+15}{x^3-41}$

Graphing Rational Functions, Part 2

Lesson 31

Topics in This Lesson:

- Graphing rational functions

Summary:

In the last lesson, we learned how to find x- and y-intercepts and horizontal and vertical asymptotes of rational functions. Once we have this information, we can find more points on the graphs by plugging numbers into the formula to find ordered pairs. After we have all the data, we can plot the points.

The graphs of rational functions will not be straight lines, nor will they be continuous lines.

Examples from the Lesson:

Sketch the graph of $y = (x^2 - 1) / (x^2 - 4)$.

After factoring, we have $y = (x - 1)(x + 1) / ((x - 2)(x + 2))$. No cancellations. Let's start getting the information we need to graph the function.

x-intercepts:

numerator = 0

$(x - 1)(x + 1) = 0$

$x - 1 = 0$ or $x + 1 = 0$

$x = 1$ or $x = -1$

$(1, 0)$ and $(-1, 0)$ are the x-intercepts.

y-intercept:

$y = (0^2 - 1) / (0^2 - 4) = -1 / -4 = 1/4$

$(0, 1/4)$ is the y-intercept (fairly close to the origin, but just above it).

vertical asymptotes:

$(x - 2)(x + 2) = 0$

$x - 2 = 0$ or $x + 2 = 0$

$x = 2$ or $x = -2$

The vertical asymptotes are $x = 2$ and $x = -2$.

What happens on either side of each of these vertical asymptotes?

First, near $x = 2$, on the right-hand side, we can plug in a number very close to 2, like 2.0001. When we plug this back into the formula and simplify, we get a large, positive number, so the graph will take a sharp turn upward to the right of the vertical line $x = 2$. If you take a number like 1.999 and plug it in, the graph will take a sharp downward turn to the left of the vertical line $x = 2$, as the value is negative.

Next, near $x = -2$, we can do the same calculations, except with -2.001 and -1.999. The graph will take a sharp turn downward on the right-hand side (-1.999), and it takes a sharp turn upward on the left-hand side (-2.001) of the vertical line $x = -2$.

horizontal asymptote:

$$y = x^2 / x^2 = 1$$

The horizontal asymptote is $y = 1$.

Draw all these pieces in. Now let's plot a few more points.

x	−6	−5	−4	−3	3	4	5	6
y	35/32	8/7	5/4	8/5	8/5	5/4	8/7	35/32

With everything we know, we have

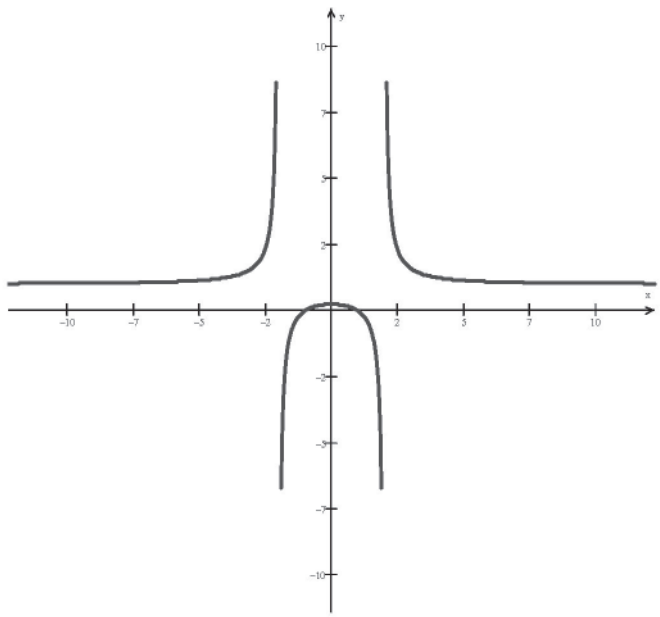

How would you have found that "upside-down U" portion of the graph between the two vertical asymptotes? You might have to get more data by plotting more points. Maybe determine the y-values at $x = -1.5$, $x = -1$, $x = 0$, $x = 1$, and $x = 1.5$ and then connect the dots. Remember—that is all graphing really is: plotting lots of points and connecting the dots!

Additional Examples:

Graph $y = \dfrac{4x+5}{2x-1}$

Let's go through the steps to find all the information we need to graph.

To find the x-intercepts, we set the numerator equal to 0 and solve for x.

$$4x + 5 = 0$$

$$4x = -5$$

$$x = -5/4$$

Our x-intercept is $\left(-\dfrac{5}{4}, 0\right)$.

The y-intercept is found by substituting 0 for x and simplifying.

$$y = \frac{4x+5}{2x-1}$$

$$y = \frac{4(0)+5}{2(0)-1}$$

$$y = \frac{5}{-1}$$

$$y = -5$$

So our y-intercept is $(0, -5)$.

The vertical asymptote is found by seeing what makes the denominator equal to 0.

$$2x - 1 = 0$$

$$2x = 1$$

$$x = 1/2$$

The horizontal asymptote is found by making a ratio of the dominant terms (if the exponents of the variables are the same, which they are in our example).

$$y = 4/2$$

$$y = 2$$

Now we have all the information we need to start to graph. However, to make our graphing easier, we should find a few more points so we can "connect the dots."

x	1	2	3	−1	−2
y	9	13/3	17/5	−1/3	3/5

Now, we can graph the function.

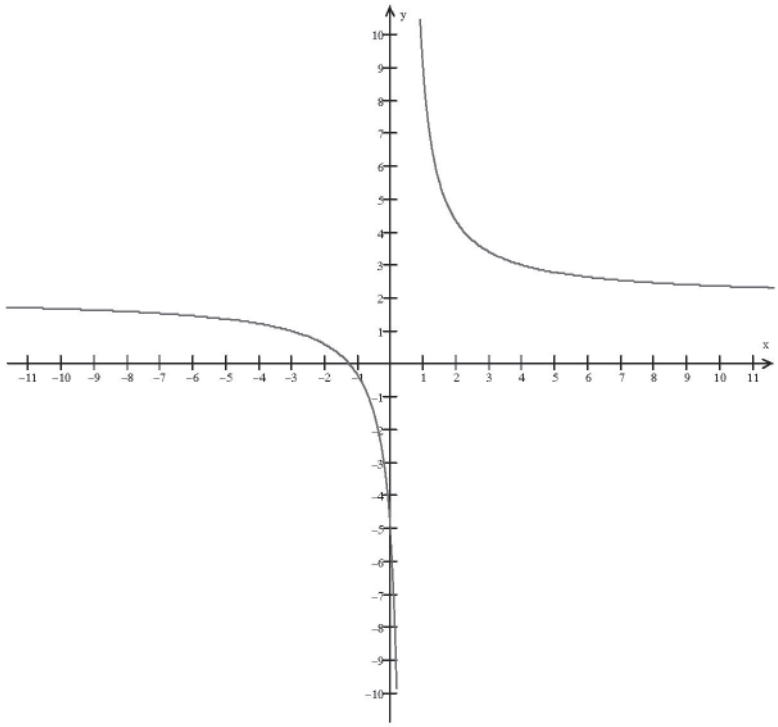

Common Errors:

- Do not confuse the horizontal and vertical asymptotes as well as the x-intercept and the y-intercept.

Study Tips:

- Make sure that you have plenty of graph paper. A spiral notebook of graph paper is convenient for all algebra work.

For Review:

- To review the tools of graphing rational functions, go to Lesson Thirty.
- It helps to make a checklist of all the data you need for graphing the functions to make sure you did not miss anything.

  x-intercepts

  y-intercept

  vertical asymptotes

  horizontal asymptotes

  additional data points if needed

Problems:

Sketch the graph of each of the following.

1. $y = \dfrac{4}{x-2}$

2. $y = \dfrac{-3}{x+6}$

3. $y = \dfrac{4x+8}{x-4}$

4. $y = \dfrac{6x+4}{3x-2}$

5. $y = \dfrac{x}{(x-1)(x-5)}$

6. $y = \dfrac{x^2}{(x-1)(x-5)}$

7. $y = \dfrac{x^2}{x-3}$

8. $y = \dfrac{4x^2+1}{x-1}$

9. $y = \dfrac{x-5}{x^2-25}$

10. $y = \dfrac{x^2-16}{x+4}$

Radical Expressions

Lesson 32

Topics in This Lesson:

- Radical expressions
- Simplifying radical expressions
- Addition and subtraction of radical expressions

Summary:

Radical expressions have a square root symbol in them. In order to simplify a radical (or square root), break the number under the radical symbol into its factors and try to find a number that is a square among the factors. Factor this number out, and you will be left with a whole number and another number under the radical symbol.

Definitions and Formulas:

Radical expression—an expression with a radical (square root) symbol in it

Examples from the Lesson:

Simplify $\sqrt{98x^5}\ \sqrt{18x^3}$.

OK, let's start by simplifying each piece separately as much as we can. Then we will see if there are any other things we can do to simplify further.

Start with $\sqrt{98x^5}$.

$$\sqrt{98x^5} = 2 \cdot 49 \cdot x^4 \cdot x$$

So

$$\sqrt{98x^5}$$
$$= \sqrt{2} \cdot \sqrt{49} \cdot \sqrt{x^4} \cdot \sqrt{x}$$
$$= 7x\sqrt{2x}$$

Next let's look at $\sqrt{18x^3}$.

$$\sqrt{18x^3} = 2 \cdot 9 \cdot x^2 \cdot x$$

So

$$\sqrt{18x^3}$$
$$= \sqrt{2} \cdot \sqrt{9} \cdot \sqrt{x^2} \cdot \sqrt{x}$$
$$= 3x\sqrt{2x}$$

Now we can take these two simplified versions of the terms and multiply them together.

$$\begin{aligned}
&\sqrt{98x^5}\cdot\sqrt{18x^3}\\
&=7x^2\sqrt{2x}\cdot 3x\sqrt{2x}\\
&=21x^3\sqrt{4x^2}\\
&=21x^3(2x)\\
&=42x^4
\end{aligned}$$

Additional Examples:

Expand

$$(3\sqrt{13}+2\sqrt{11})(\sqrt{13}-4\sqrt{11})$$

We can FOIL this expression.

$$\begin{aligned}
&(3\sqrt{13}+2\sqrt{11})(\sqrt{13}-4\sqrt{11})\\
&=3(\sqrt{13})^2-12\sqrt{11}\sqrt{13}+2\sqrt{11}\sqrt{13}-8(\sqrt{11})^2\\
&=3(13)-10\sqrt{11}\sqrt{13}-8(11)\\
&=39-10\sqrt{143}-88\\
&=-49-10\sqrt{143}
\end{aligned}$$

We know that 143 is the product of two prime numbers, 11 and 13, so we cannot further reduce $\sqrt{143}$.

Our final answer is $-49-10\sqrt{143}$.

Common Errors:

- Be sure to simplify your radicals as much as you can. Look for squares within a larger radical that can be factored out.

Study Tips:

- If you do not have your basic math facts memorized well, use flashcards or a computer drill program so that they come to mind instantly without your having to stop and think about them.

Problems:

Simplify the following.

1. $\sqrt{150}$
2. $\sqrt{72t^9}$
3. $\sqrt{50x^9}\sqrt{200x^3}$
4. $\sqrt{\dfrac{48y^5}{27y^{11}}}$
5. $\dfrac{\sqrt{80}}{\sqrt{28x^3}}$

6. $6\sqrt{10}+7\sqrt{40}$

7. $2\sqrt{5}-3\sqrt{40}+7\sqrt{45}$

8. $2\sqrt{7}(4\sqrt{7}-5)$

9. $(\sqrt{2}-\sqrt{5})(\sqrt{3}+\sqrt{5})$

10. $(\sqrt{13}-\sqrt{7})(\sqrt{13}+\sqrt{7})$

Solving Radical Equations

Lesson 33

Topics in This Lesson:

- Solving radical equations

Summary:

Radical equations are simply equations with a square root, or radical, in them. To solve radical equations, get the radical by itself on one side of the equation. Then square both sides of the equation and proceed to solve for x. We check our answers by plugging them back into the original equation. If there are two radical symbols that cannot be combined, put one on each side of the equation and then square both sides of the equation.

Our solution cannot cause the radical to be a negative number, as we cannot take the square root of a negative number.

Definitions and Formulas:

Radical equations—equations that contain radical expressions

Extraneous solution—a number that appears to be a solution of a radical equation but is not

Fact: Whenever $x \geq 0$, $\left(\sqrt{x}\right)^2 = x$. This is *not* true when $x < 0$.

Examples from the Lesson:

Solve $3x = 2x + \sqrt{(4x+5)}$

Begin by isolating the radical symbol by subtracting $2x$ from both sides of the equation. That will give us

$$3x - 2x = \sqrt{(4x+5)}$$

$$x = \sqrt{(4x+5)}$$

Now what do we do? Square both sides of the equation! That is going to give us

$$x^2 = 4x + 5$$

Now we are just looking at a quadratic equation, and we know how to solve that. So let's move forward with the example.

$$x^2 = 4x + 5$$

$$x^2 - 4x - 5 = 0$$

$$(x - 5)(x + 1) = 0$$

$$x - 5 = 0 \text{ or } x + 1 = 0$$

$$x = 5 \text{ or } x = -1$$

So our solutions appear to be $x = 5$ and $x = -1$. But we must check to see if both of these are really solutions.

$$3x = 2x + \sqrt{(4x+5)}$$

$$3(5) = 2(5) + \sqrt{(4(5)+5)}$$

$$15 = 10 + \sqrt{25}$$

$$15 = 10 + 5$$

$$15 = 15$$

Check. So $x = 5$ is really a solution. Now let's check $x = -1$.

$$3x = 2x + \sqrt{(4x+5)}$$

$$3(-1) = 2(-1) + \sqrt{(4(-1)+5)}$$

$$-3 = -2 + \sqrt{(-4+5)}$$

$$-3 = -2 + \sqrt{1}$$

$$-3 = -2 + 1$$

$$-3 = -1$$

Not true! What does this mean? It means that $x = -1$ is not really a solution. In such cases, we refer to $x = -1$ as an "extraneous solution." It's like an "imposter" solution, but, bottom line, it is no solution at all. So we throw out $x = -1$ as a solution and only keep $x = 5$. The original equation just has that one solution, $x = 5$.

Additional Examples:

Solve $\sqrt{3x^2+2x} = \sqrt{2x^2-4x+7}$.

The first thing to do is to get rid of the radicals. One easy way is to square both sides of the equation. When we do, we get

$$3x^2+2x = 2x^2-4x+7$$

Now we just need to combine like terms and solve for x.

$$3x^2+2x = 2x^2-4x+7$$

$$0 = x^2+6x-7$$

$$0 = (x+7)(x-1)$$

So $x = -7$ or $x = 1$.

Now we must check the solutions to see if either one is an extraneous solution.

$$\sqrt{3x^2+2x} = \sqrt{2x^2-4x+7}$$
$$\sqrt{3(-7)^2+2(-7)} = \sqrt{2(-7)^2-4(-7)+7}$$
$$\sqrt{3(49)-14} = \sqrt{2(49)+28+7}$$
$$\sqrt{133} = \sqrt{133}$$

$$\sqrt{3x^2+2x} = \sqrt{2x^2-4x+7}$$
$$\sqrt{3(1)^2+2(1)} = \sqrt{2(1)^2-4(1)+7}$$
$$\sqrt{3+2} = \sqrt{2-4+7}$$
$$\sqrt{5} = \sqrt{5}$$

Both answers are solutions of the equation.

Common Errors:

- You must check the solutions you find to a radical equation. Some of them might be extraneous solutions.

Study Tips:

- When in doubt how to solve, square both sides of the equation.
- Look for factoring patterns. Can you factor out a number?

Problems:

Solve the following equations.

1. $\sqrt{x}-1=4$
2. $\sqrt{y-3}=8$
3. $\sqrt{x+7}=-2$
4. $\sqrt{7x-4}=\sqrt{5x+8}$
5. $\sqrt{9x+10}=\sqrt{1-3x}$
6. $\sqrt{6x+7}=x$
7. $\sqrt{6x}+2=14$
8. $\sqrt{3x}+14=5$
9. $\sqrt{2x^2-9x+20}=x$
10. $\sqrt{2x^2+5x-24}=x$

Graphing Radical Functions

Lesson 34

Topics in This Lesson:

- Graphing radical functions

Summary:

When you begin to graph radical functions, the first thing to consider is the domain. The amount under the radical symbol cannot be negative. Make a table or list of values by plugging in numbers for x. This will give you the ordered pairs for points on the graph. You may plug in any numbers you wish, as long as they are in the domain of the function. After you have plotted your points, connect the dots to make your graph.

Many of the graphs mostly will look like the graph of $\sqrt{x}$ but will have different starting points. If you replace the variable x in a function by the expression $x + a$ (where a is some positive number), then you shift the graph of the function over to the left by exactly a number of units. If you replace the variable x in a function by the expression $x - a$ (where a is some positive number), then you shift the graph of the function over to the right by exactly a units. When you add a positive constant b to a function (and not just to the variable x), then you shift the graph of the function up by exactly b units.

Examples from the Lesson:

Sketch the graph of $f(x) = \sqrt{x} + 4$.

To start, notice that "+ 4" is completely outside the square root symbol. What is the domain of $f(x)$? Well, the part under the square root symbol needs to be greater than or equal to 0. So we need $x \geq 0$. (Notice that the 4 does not have anything to do with the domain. The presence of that 4 is not going to hinder us from plugging in any particular value of x.)

OK, let's plug in some numbers for x and see what we get.

$f(0) = \sqrt{0} + 4 = 0 + 4 = 4$

$f(1) = \sqrt{1} + 4 = 1 + 4 = 5$

$f(4) = \sqrt{4} + 4 = 2 + 4 = 6$

$f(9) = \sqrt{9} + 4 = 3 + 4 = 7$

$f(16) = \sqrt{16} + 4 = 4 + 4 = 8$

So now we know five points on my graph: (0, 4), (1, 5), (4, 6), (9, 7), and (16, 8). Draw those points on a piece of graph paper and connect the dots. What do you see? Well, you should see the same graph as the graph of $\sqrt{x}$ but something is different. The graph has been shifted up by four units, so that instead of starting at the origin (like the graph of $\sqrt{x}$) does, this graph "starts" at (0, 4).

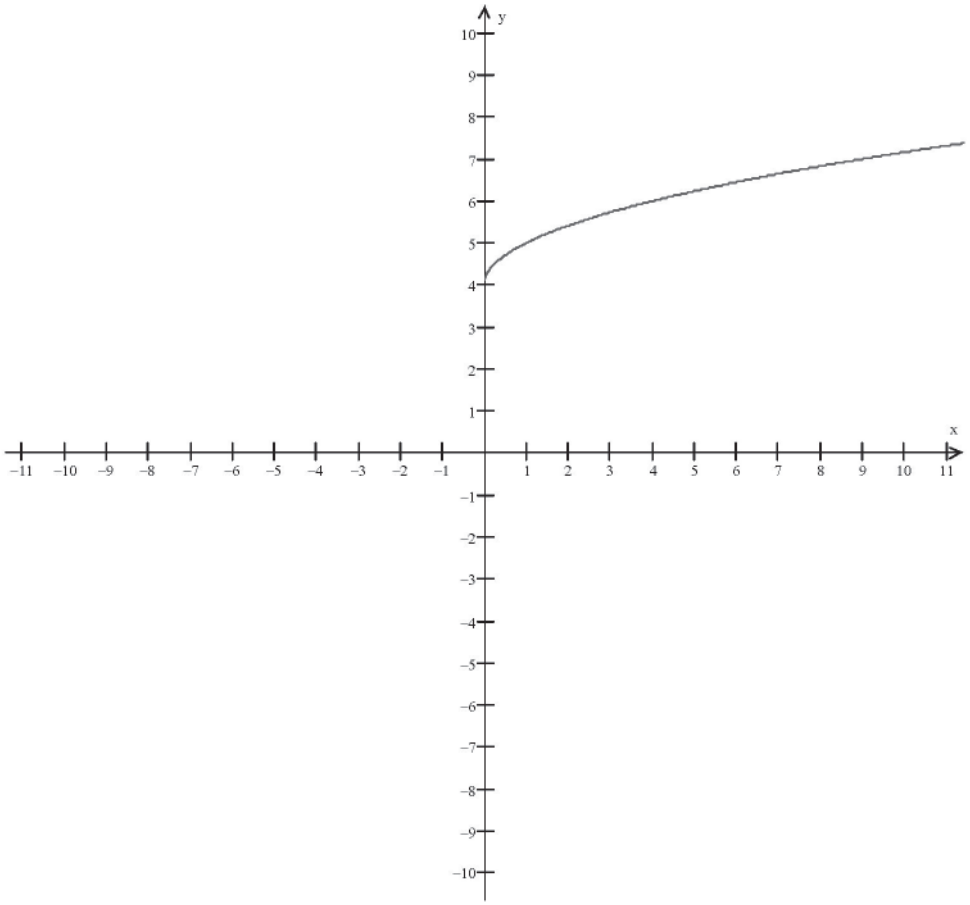

Additional Examples:

Graph $f(x) = \sqrt{x+3}$.

One way to start is to draw the graph of $\sqrt{x}$ that starts at (0, 0) and then shift the graph to the left three units, so we are starting at (−3, 0).

If you did not know this fact, you could plug in values for x and solve to find points on the graph. Let's choose values that will make it easy to take the square root.

$f(-3) = \sqrt{-3+3} = \sqrt{0} = 0$

$f(1) = \sqrt{1+3} = \sqrt{4} = 2$

$f(6) = \sqrt{6+3} = \sqrt{9} = 3$

$f(13) = \sqrt{13+3} = \sqrt{16} = 4$

So our points are (−3, 0), (1, 2), (6, 3), and (13, 4).

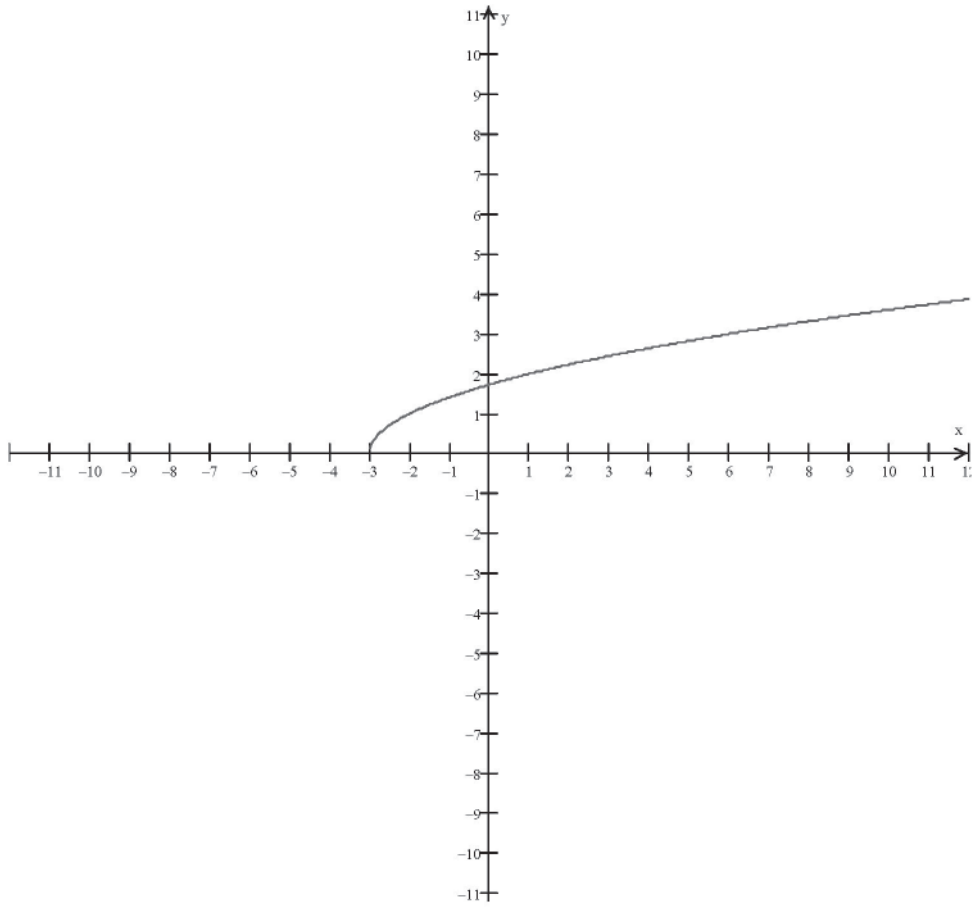

Common Errors:

- Many of these graphs have the same shape. If your graph does not, check your calculations.
- Do not plug in a value for x that is not in the domain of your function. Any value that would make the amount under the radical negative is not a part of the domain.

Study Tips:

- Graph paper and a calculator to find square roots will be helpful for this lesson.

Problems:

Sketch the graphs of the following.

1. $f(x) = \sqrt{x-2}$
2. $f(x) = \sqrt{x+3}$
3. $f(x) = \sqrt{x+7}$
4. $f(x) = \sqrt{x} + 5$

5. $f(x) = \sqrt{x} + 7$

6. $f(x) = \sqrt{x} - 6$

7. $f(x) = \sqrt{x-3} + 4$

8. $f(x) = \sqrt{x-5} - 1$

9. $f(x) = \sqrt{x+4} - 6$

10. $f(x) = 2\sqrt{x}$

Sequences and Pattern Recognition, Part 1

Lesson 35

Topics in This Lesson:

- Sequences
- Geometric sequences
- Arithmetic sequences

Summary:

A sequence is an ordered list of numbers. Some sequences have a definite end, and they are called *finite*. Many sequences go on forever and are *infinite*. An infinite sequence is represented by an ellipsis (…) at the end of the last number shown.

The pattern of a sequence can be determined by a function. If we have a sequence, we can figure out the next term by using the function. Sometimes the function is simple, like $x + 2$, but sometimes it is complex.

If the pattern requires you to multiply to find the next number in the sequence, it is a geometric sequence. If you add to find the next number, it is an arithmetic sequence. The common difference is the amount you add to the previous term to get the new term of an arithmetic sequence.

Definitions and Formulas:

Sequence—a function whose domain is the set of natural numbers (or positive integers); an ordered list of numbers which can be finite or infinite

Term—each number in a sequence

Geometric sequence—a sequence that is built term by term by multiplying the same number each time

Arithmetic sequence—a sequence that is built term by term by adding the same number each time

Common difference—in an arithmetic sequence, the amount by which you add each time you build a new term in the sequence

Examples from the Lesson:

Give a formula for the nth term in 3, 9, 27, 81, 243, …

If the pattern is not immediately obvious to you, here is one question you might ask: Is it "clear" how to get from one term to the next? It appears that each term is constructed from the previous by multiplying by 3:

$9 = 3 \times 3$

$27 = 9 \times 3$

$81 = 27 \times 3$

$243 = 81 \times 3$

This gives us a hint that a formula for the nth term might be related to a power of 3. So let's try $f(n) = 3^n$.

Check our work.

$f(1) = 3^1 = 3$ Check.

$f(2) = 3^2 = 9$ Check.

$f(3) = 3^3 = 27$ Check. Done!

Additional Examples:

Find a formula for the nth term of 9, 15, 21, 27, 33, 39, …

Notice first that this is an arithmetic sequence with first value 9 and common difference 6. Our formula should be $f(n) = 6(n - 1) + 9$ where n is the number of the term. Let's check.

$f(1) = 6(n - 1) + 9 = 6(1 - 1) + 9 = 0 + 9 = 9$ That's the first term.

$f(2) = 6(n - 1) + 9 = 6(2 - 1) + 9 = 6 + 9 = 15$ That's the second term.

$f(6) = 6(n - 1) + 9 = 6(6 - 1) + 9 = 30 + 9 = 39$ That's the sixth term.

So it looks as if this is our function.

Common Errors:

- You need to make sure that you check several terms in the series to confirm that the formula you wrote is correct. Although a formula might work for one or two numbers in the sequence, it might not work for all of them.

Problems:

Find the next term in each of the following sequences.

1. 1, 4, 7, 10, 13, 16, 19, 22, …

2. 1, 3, 9, 27, 81, 243, …

3. $1, \frac{3}{2}, 2, \frac{5}{2}, 3, \frac{7}{2}, 4, \ldots$

4. 100, 50, 25, 12.5, 6.25, 3.125, …

Find a formula for the nth term of each sequence.

5. 1, 4, 16, 64, 256, …

6. 2, −6, 18, −54, 162, …

7. $100, 20, 4, \frac{4}{5}, \frac{4}{25}, \ldots$

8. 4, 12, 20, 28, 36, 44, 52, 60, …

9. 11, 9, 7, 5, 3, 1, −1, −3, −5, …

10. 23, 32, 41, 50, 59, 68, 77, 86, …

Sequences and Pattern Recognition, Part 2

Lesson 36

Topics in This Lesson:

- Finding formulas for sequences
- Finding patterns in sequences
- Building sequences

Summary:

A sequence that is built by adding a certain value to the previous term is called an arithmetic sequence. First difference is another name for common difference, which is the amount added to the previous term to get the next term in the sequence. When these first differences are always the same, it means you have an arithmetic sequence and the formula for the nth term will be a linear one. In other words, the formula will be a polynomial in the variable n with degree 1 (x^1).

The second differences are the differences of the first differences. In other words, the amount being added to the terms in a sequence changes. However, the differences between these changes are constant. Those are the second differences. If the second differences are the same, it tells us that the formula for the nth term is a quadratic polynomial (degree 2 polynomial, x^2) in the variable n.

You can often find the formula for the sequence first by determining which degree the difference is (degree 1, 2, 3, etc.). The highest power in the formula will correspond to the degree of the difference. For example, a sequence with a third difference will need the formula $f(n) = an^3 + bn^2 + cn + d$ for some numbers a, b, c, and d. You set up a system of equations and solve it to determine the function for the sequence.

Definitions and Formulas:

First difference—another term for the common difference in an arithmetic sequence; the amount added to the previous term in a sequence to get the next term

Second difference—the difference of the first differences

If you have a sequence whose second differences are all the same, then a formula for the nth term is a quadratic (degree 2) polynomial in the variable n.

If you have a sequence whose third differences are all the same, then a formula for the nth term is a cubic (degree 3) polynomial in the variable n.

If you have a sequence whose fourth differences are all the same, then a formula for the nth term is a degree 4 polynomial in the variable n.

Examples from the Lesson:

Find a formula for the nth term of the sequence 3, 6, 11, 18, 27, 38, 51, 66, …

This sequence is definitely not a geometric sequence and it is also not an arithmetic sequence (it does not have a common difference). Let's look at the first differences.

```
3  6  11 18 27 38 51 66
 \/ \/ \/ \/ \/ \/ \/
 3  5  7  9  11 13 15
```

Clearly, we do not have an arithmetic sequence because the first differences are not all the same.

But don't give up! Keep going. Compute the second differences, which are the differences of the first differences.

```
3  6  11  18  27  38  51  66
 \/  \/  \/  \/  \/  \/  \/
  3   5   7   9  11  13  15
   \/  \/  \/  \/  \/  \/
    2   2   2   2   2   2
```

The second differences are the same. What does that tell us? It tells us that the formula for the nth term is a quadratic polynomial (degree 2 polynomial) in the variable n.

It means that $f(n) = an^2 + bn + c$ for some numbers a, b, and c.

How do we figure out a, b, and c in this example? We use our knowledge of solving systems of linear equations that we learned several lessons ago. Here's how.

We know $f(1) = 3$ and $f(1) = a(1)^2 + b(1) + c$. So we know $3 = f(1) = a + b + c$.

That gives us an equation: $a + b + c = 3$.

Next we know $6 = f(2) = a(2)^2 + b(2) + c$ or $4a + 2b + c = 6$.

Last, $11 = f(3) = a(3)^2 + b(3) + c$ or $9a + 4b + c = 11$.

So we need to solve this system.

$$a + b + c = 3$$

$$4a + 2b + c = 6$$

$$9a + 4b + c = 11$$

But how do we solve such a system—it has three equations, not just two, and it also has three unknown variables, not just two. No problem—it just takes a little more work, but not much.

Subtracting the first equation from the second gives us a new equation.

$$3a + b = 3$$

Notice that I have eliminated the variable c. (Remember solving systems of equations by elimination?)

So we know $3a + b = 3$ or $b = -3a + 3$.

But I could have also subtracted the second equation from the third equation in the original system of equations. That would have given us $5a + 2b = 5$. Again, that is an equation with c missing.

I can now substitute $-3a + 3$ in for b in this new equation.

$$5a + 2b = 5$$

$$5a + 2(-3a + 3) = 5$$

$$5a - 6a + 6 = 5$$

$$-a + 6 = 5$$

$$-a = -1$$

$$a = 1$$

I have the first coefficient in my formula. (Remember: My formula is $f(n) = an^2 + bn + c$. We just found that the value of a is 1.)

But if $a = 1$ and $b = -3a + 3$, then we can find b by substitution.

$$b = -3a + 3$$
$$b = -3(1) + 3$$
$$b = -3 + 3$$
$$b = 0$$

I have the second coefficient in my formula. Now I know that my formula is $f(n) = 1n^2 + 0n + c$ or $f(n) = n^2 + c$.

Now I can calculate c.

Remember that one of my original equations was $a + b + c = 3$.

Since $a = 1$ and $b = 0$, I know

$$1 + 0 + c = 3 \text{ or } 1 + c = 3 \text{ or } c = 2$$

We now know everything we need.

$$f(n) = an^2 + bn + c$$
$$a = 1,\ b = 0,\ c = 2$$

So my formula is $f(n) = 1n^2 + 0n + 2$ or $f(n) = n^2 + 2$.

Let's check.

$$f(n) = n^2 + 2$$
$$f(1) = 1^2 + 2 = 3$$
$$f(2) = 2^2 + 2 = 4 + 2 = 6$$
$$f(3) = 3^2 + 2 = 9 + 2 = 11$$
$$f(4) = 4^2 + 2 = 16 + 2 = 18$$
$$f(5) = 5^2 + 2 = 25 + 2 = 27$$

Yes, we have the right formula. What's so great about that? We did not have to guess the formula; we constructed it from scratch, and from the following general principles:

If you have a sequence whose second differences are all the same, then a formula for the nth term is a quadratic (degree 2) polynomial in the variable n.

If you have a sequence whose third differences are all the same, then a formula for the nth term is a cubic (degree 3) polynomial in the variable n.

If you have a sequence whose fourth differences are all the same, then a formula for the nth term is a degree 4 polynomial in the variable n, and so on.

Additional Examples:

Find a formula for the nth term of the sequence 4, 17, 38, 67, 104, 149, …

Since a pattern is not immediately clear, let's look at the first differences.

```
4   17   38   67  104  149
 \/   \/   \/   \/   \/
13   21   29   37   45
```

This is not an arithmetic sequence because the first differences are not all the same. So next we compute the second differences.

```
4   17   38   67  104  149
 \/   \/   \/   \/   \/
 13   21   29   37   45
   \/   \/   \/   \/
   8    8    8    8
```

The second differences are the same. This tells us that the formula for the nth term is a quadratic polynomial (degree 2 polynomial) in the variable n, which means that $f(n) = an^2 + bn + c$ for some numbers a, b, and c.

We use our knowledge of solving systems of linear equations to figure out a, b, and c.

We know $f(1) = 4$ and $f(1) = a(1)^2 + b(1) + c$. So we know $4 = f(1) = a + b + c$.

That gives us an equation: $a + b + c = 4$.

Next we know $17 = f(2) = a(2)^2 + b(2) + c$ or $4a + 2b + c = 17$.

Also, $38 = f(3) = a(3)^2 + b(3) + c$ or $9a + 4b + c = 38$.

So we have this system.

$$a + b + c = 4$$

$$4a + 2b + c = 17$$

$$9a + 4b + c = 38$$

Subtracting the first equation from the second gives the equation

$$3a + b = 13$$

This eliminated the variable c.

So we know $3a + b = 13$ or $b = -3a + 13$.

Next subtract the second equation from the third equation in the original system of equations. That gives $5a + b = 21$. Again, that is an equation with c missing.

I can now substitute $-3a + 13$ for b in this new equation.

$$5a + b = 21$$

$$5a + (-3a + 13) = 21$$

$$5a - 3a + 13 = 21$$

$$2a + 13 = 21$$

$$2a = 8$$

$$a = 4$$

We now have the first coefficient in our formula, $f(n) = an^2 + bn + c$. We just found that the value of a is 4.

If $a = 4$ and $b = -3a + 13$, then we can find b by substitution.

$$b = -3a + 13$$

$$b = -3(4) + 13$$

$$b = -12 + 13$$

$$b = 1$$

The second coefficient in our formula is $b = 4$. Now we know that our formula is $f(n) = 4n^2 + 1n + c$.

Now we can calculate c:

Remember that one of the original equations was that $a + b + c = 4$.

Since $a = 4$ and $b = 1$, we know

$$4 + 1 + c = 4 \text{ or } 5 + c = 4 \text{ or } c = -1$$

This means

$$f(n) = an^2 + bn + c$$

with $a = 4$, $b = 1$, $c = -1$.

So the formula is $f(n) = 4n^2 + 1n - 1$ or $f(n) = 4n^2 + n - 1$.

Common Errors:

- Arithmetic errors in finding the values for a, b, and c are common. (There are lots of steps to go through, so it is easy to make mistakes along the way.)

Study Tips:

- Finding the formulas for these sequences can take up a lot of space. Do not be stingy with your paper. Take the space you need to be able to see things clearly.

For Review:

- To review sequences and terminology, go to Lesson Thirty-Five.

Problems:

Identify the pattern for the nth term in the following sequences.

1. 1, 4, 9, 16, 25, 36, 49, 64, 81, …

2. 1, 8, 27, 64, 125, 216, …

Find a formula for the nth term of each sequence.

3. 1, 3, 6, 10, 15, 21, 28, 36, 45, …

4. 3, 9, 19, 33, 51, 73, 99, 129, 163, …

5. 2, 2, 4, 8, 14, 22, 32, 44, 58, ...

6. 0, 7, 22, 45, 76, 115, 162, 217, 280, …

Find the next term in each sequence by identifying a recurrence rule for finding the terms of the sequences.

7. 1, 1, 3, 7, 17, 41, 99, …

8. 1, 1, 3, 5, 11, 21, 43, 85, …

9. 1, 1, 1, 3, 5, 9, 17, 31, 57, …

10. 1, 2, 6, 24, 120, 720, …

Formula List

n^{th} term of an arithmetic sequence: The formula for the nth term of an arithmetic sequence is given by $f(n) = d(n - 1) + a_1$, where a_1 is the first term in the sequence and d is the common difference. (Lesson Thirty-Five)

Slope: The slope between 2 points (x_1, y_1) and (x_2, y_2) is given by $(y_2 - y_1)/(x_2 - x_1)$. (Lesson Nine)

Slope-intercept form of a line: $y = mx + b$, where m = slope of the line and b = y-intercept of the line (the place where the line crosses the y-axis). (Lesson Ten)

Point-slope form: $y - y_1 = m(x - x_1)$, where the line passes through point (x_1, y_1) and has a slope of m. (Lesson Eleven)

Pythagorean theorem: In any right triangle, the sum of the squares of the lengths of the legs equals the square of the length of the hypotenuse: $a^2 + b^2 = c^2$. (Lesson Twenty-Five)

Quadratic formula: $x = \dfrac{-b \pm \sqrt{b^2 - 4ac}}{2a}$. (Lesson Twenty-One)

Vertex of a parabola: The vertex of a parabola is given by (a, b) if the equation of the parabola is written in the form $y = (x - a)^2 + b$. (Lesson Twenty-Three)

Solutions

Lesson 1

1. Begin on the number 5 on a number line. To add −2, you move to the left on that number line by two units. You will then be on the number 3. This is the answer: $5 + (-2) = 3$.
2. Begin on the number −4 on a number line. To add −3, you move to the left on that number line by three units. You will then be on the number −7. This is the answer: $-4 + (-3) = -7$.
3. Begin on the number −6 on a number line. To add 11, you move to the right on that number line by 11 units. You will then be on the number 5. This is the answer: $-6 + 11 = 5$.
4. Begin on the number −9 on a number line. To add 7, you move to the right on that number line by seven units. You will then be on the number −2. This is the answer: $-9 + 7 = -2$.
5. When multiplying two signed numbers, you must remember that the product will be negative whenever the signs of the two given numbers are different (one of the numbers is negative and the other is positive). So in this case, the final answer will be negative. Since $3 \times 6 = 18$, the final answer here is −18.
6. When multiplying two signed numbers, you must remember that the product will be negative whenever the signs of the two given numbers are different (one of the numbers is negative and the other is positive). So in this case, the final answer will be negative. Since $10 \times 8 = 80$, the final answer here is −80.
7. When multiplying two signed numbers, you must remember that the product will be positive whenever the signs of the two given numbers are the same (both numbers are positive or both numbers are negative). So in this case, the final answer will be positive. Since $2 \times 9 = 18$, the final answer here is 18.
8. When dividing two signed numbers, you must remember that the final answer will be negative whenever the signs of the two given numbers are different (one of the numbers is negative and the other is positive). So in this case, the final answer will be negative. Since $30 \div 6 = 5$, the final answer here is −5.
9. When dividing two signed numbers, you must remember that the final answer will be negative whenever the signs of the two given numbers are different (one of the numbers is negative and the other is positive). So in this case, the final answer will be negative. Since $45 \div 5 = 9$, the final answer here is −9.
10. When dividing two signed numbers, you must remember that the final answer will be positive whenever the signs of the two given numbers are the same (both numbers are positive or both numbers are negative). So in this case, the final answer will be positive. Since $72 \div 9 = 8$, the final answer here is 8.

Lesson 2

1. Recall that we can add these numbers in any order that we wish (since the only operation we are using is addition). Then notice the following.

   $8 + 12 = 20$

   $4 + 6 = 10$

   $3 + 7 = 10$

   That means the final answer for this sum is $20 + 10 + 10 = 40$.

2. We know that we can multiply these numbers in any order that we wish (it's the same rule as with problems only involving addition). So let's multiply these numbers so that our answers work out nicely (as far as possible). First notice that $5 \times 2 = 10$. Next we know that $4 \times 5 = 20$. So we are really dealing with $10 \times 3 \times 20$. That's the same as 30×20, since $10 \times 3 = 30$. And $30 \times 20 = 600$. So the answer here is 600.

3. Because there is a mixture of additions and subtractions here (and no other operations), we simply work left to right to simplify this expression.

   $25 - 14 - 8 + 3$

   $= 11 - 8 + 3$

   $= 3 + 3$

   $= 6$

4. In this problem, we have a mixture of addition, subtraction, and multiplication. The rules for order of operations tell us that we must compute the multiplication first. So we have the following.

   $2 - 3 \times 5 + 4$

   $= 2 - (3 \times 5) + 4$

   $= 2 - 15 + 4$

   Now we just work left to right.

   $2 - 15 + 4$

   $= -13 + 4$

   $= -9$

5. The rules for order of operations tell us that we must compute the multiplication and division parts first and then perform the addition and subtraction. So we have the following.

   $18 - 5 \times 2 + 27 \div 3$

   $= 18 - (5 \times 2) + (27 \div 3)$

   $= 18 - 10 + 9$

   Now we just work left to right to finish the problem.

   $18 - 10 + 9$

   $= 8 + 9$

   $= 17$

6. We must remember that exponentiation is performed before multiplication, addition, and subtraction. So we have the following.

   $5 + 3^2 - 6 \times 4$

   $= 5 + 9 - 6 \times 4$

   $= 5 + 9 - 24$

   $= 14 - 24$

   $= -10$

7. We first perform the exponentiation to get

$100 \div 4 \times 3 + 12$

We next perform the divisions and multiplications from left to right.

$100 \div 4 \times 3 + 12$

$= 25 \times 3 + 12$

$= 75 + 12$

We finish the problem by performing the addition.

$75 + 12 = 87$

8. The order of operations rules tell us that whatever is inside parentheses is to be computed first. We then perform the multiplication followed by the addition. So we have the following.

$(4 + 8) + 3 \times 5$

$= 12 + 3 \times 5$

$= 12 + 15$

$= 27$

9. The order of operations rules tell us that whatever is inside parentheses is to be computed first. We then perform the exponentiation followed by the multiplication. So we have the following.

$5 \times (9 - 3)^2$

$= 5 \times 6^2$

$= 5 \times 36$

$= 180$

10. Our order of operations rules tell us we must first compute what is inside the parentheses, followed by the exponentiations, then the division and multiplication from left to right, and, last, the remaining addition. So we have

$56 \div (11 - 4) + 2^3 \times 5$

$= 56 \div 7 + 2^3 \times 5$

$= 56 \div 7 + 8 \times 5$

$= 8 + 8 \times 5$

$= 8 + 40$

$= 48$

Lesson 3

1. We rewrite 45% as a fraction as $\frac{45}{100}$. Reduce this fraction by cancelling a 5 from the numerator and the denominator; the final answer is $\frac{9}{20}$.

2. We rewrite 8% as a fraction as $\frac{8}{100}$. Reduce this fraction by cancelling a 4 from the numerator and the denominator; the final answer is $\frac{2}{25}$.

3. We rewrite 200% as a fraction as $\frac{200}{100}$. This is the same as the number 2 or, if we want to write it as a fraction, $\frac{2}{1}$.

4. This is the same as "48 hundredths." That means it is the same as $\frac{48}{100}$. Reduce this by cancelling a 4 from the numerator and denominator to get a final answer of $\frac{12}{25}$.

5. This is the same as "twelve and eight tenths." That means it is the same as $12\frac{8}{10}$. Reduce the fraction by cancelling a 2 from the numerator and denominator to get a final answer of $12\frac{4}{5}$.

6. Convert 4/5 to a decimal number.

$$\begin{array}{r} 0.8 \\ 5\overline{)4.0} \\ \underline{40} \\ 0 \end{array}$$

So the final answer is .8.

7. $$\begin{array}{r} 2.666 \\ 6\overline{)16.000} \\ \underline{12} \\ 40 \\ \underline{36} \\ 40 \\ \underline{36} \\ 40 \\ \underline{36} \\ 4 \end{array}$$

This process is going to continue indefinitely and this means that this is an infinite repeating decimal number. The final answer is 2.6666…, or $2.\overline{6}$.

8. We begin with 87. and move the decimal point two spaces to the left. This gives us .87 and this is the final answer.

9. We begin with 3. and move the decimal point two spaces to the left. This gives us .03 (after we include the extra 0, which is needed to allow the decimal point to move two spaces). So the final answer is .03.

10. We begin with 5,678. and move the decimal point two spaces to the left. This gives us 56.78 and this is the final answer.

Lesson 4

1. "Eight times m" is simply $8m$. Four more than this is $4 + 8m$ or $8m + 4$.
2. "Two times x" is $2x$, so the difference of two times x and 10 is $2x - 10$.
3. This is $x - 17$.
4. The sum of x and 12 is $x + 12$. Three times this quantity is $3(x + 12)$.
5. The square root of t is $\sqrt{t}$, so that the quotient of the square root of t and 9 is $\frac{\sqrt{t}}{9}$.
6. Let

   P = the perimeter of the rectangle

   L = the length of the rectangle

   W = the width of the rectangle

   The left-hand side of the equation is simply P (for the perimeter of the rectangle). The word *is* is replaced by "=".

   "Two times the length of the rectangle" is $2L$ and "two times the width of the rectangle" is $2W$. So the "sum of two times the length of the rectangle and two times the width of the rectangle" is $2L + 2W$. Therefore, the equation is $P = 2L + 2W$.
7. Let

   T = the number of three-pointers made

   F = the number of free throws made

   The left-hand side of the equation is T. The word *is* is replaced by "=". "Six more than the number of free throws made" is $6 + F$ or $F + 6$. Therefore, the equation is $T = F + 6$.
8. Let

   S = the number of customers on a Saturday

   M = the number of customers on a Monday

   Then we have $S = 3 \times M$ or just $S = 3M$.
9. Let

   T = the tip for the meal

   B = the bill

   Then we have $T = (18\%)B$. If we rewrite 18% as the decimal number .18, then we have

   $T = .18B$.
10. Let

    V = the volume of the box

    L = the length of the box

    W = the width of the box

    H = the height of the box

    Then we have $V = L \times W \times H$.

Lesson 5

1. $(-3-4)^2+5(-3)^2$

$= (-7)^2+5(9)$

$= 49+45$

$= 94$

2. $(-1-4)(-1+3)^2-6(-1)^3$

$=(-5)(2)^2-6(-1)^3$

$= (-5)(4)-6(-1)$

$= -20+6$

$= -14$

3. $14x^4y^2-8y^2x^4+5x^2y^4-2(xy^2)^2$

$= 14x^4y^2-8x^4y^2+5x^2y^4-2x^2y^4$

$= 6x^4y^2+3x^2y^4$

4. $17a^3a^2+13(a^3)^2-8a^2a^4+10a^7a^{-2}$

$= 17a^5+13a^6-8a^6+10a^5$

$= 27a^5+5a^6$

5. $(x^2\cdot y^7\cdot z^3)(x^9\cdot y^4\cdot z^2)$

$= x^{11}\cdot y^{11}\cdot z^5$

6. $(3x^0\cdot y^{-7}\cdot z^5)(6x^4\cdot y^{-1}\cdot z^3)$

$= 18x^4\cdot y^{-8}\cdot z^8$

7. $(5x^2\cdot y^{-5}\cdot z^5)(3x^4\cdot y^{-1}\cdot z^3)(8x\cdot z^{-8})$

$= 120x^7\cdot y^{-6}\cdot z^0$

$= 120x^7\cdot y^{-6}$

8. $\dfrac{a^{10}b^{17}}{b^4a^8}$

$= a^2b^{13}$

9. $\dfrac{63y^9z^8}{21y^4z^8}$

$= 3y^5z^0$

$= 3y^5$

10. $\dfrac{24x^{-4}y^{-9}z^8}{18xy^{-2}z^{-3}}$

$= \dfrac{4z^{11}}{3x^5y^7}$

Lesson 6

1. The x-coordinate is 5, so we move five units to the right of the origin. The y-coordinate is −3, so we move down three units. This means our point is in Quadrant IV.

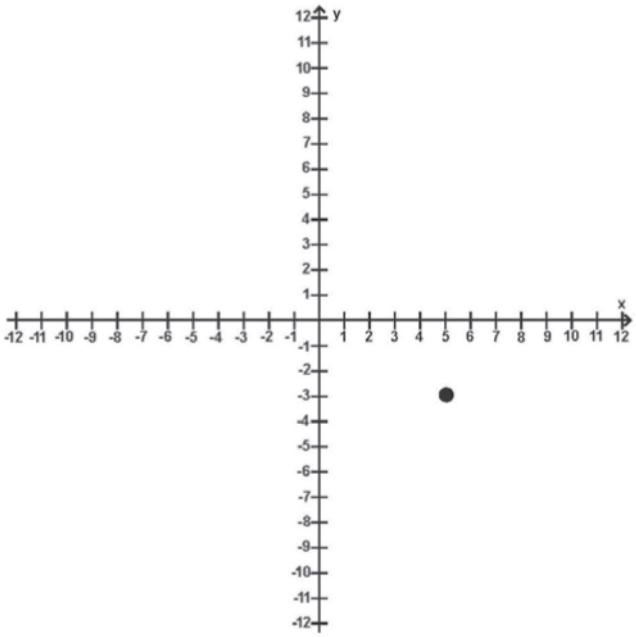

2. The x-coordinate is −8, so we move eight units to the left of the origin. The y-coordinate is 4, so we move up four units. This means our point is in Quadrant II.

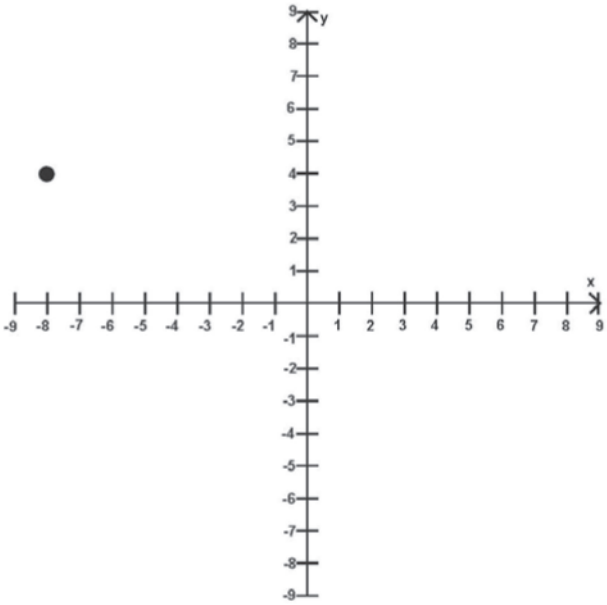

3. The x-coordinate is -2, so we move two units to the left of the origin. The y-coordinate is -1, so we move down one unit. This means our point is in Quadrant III.

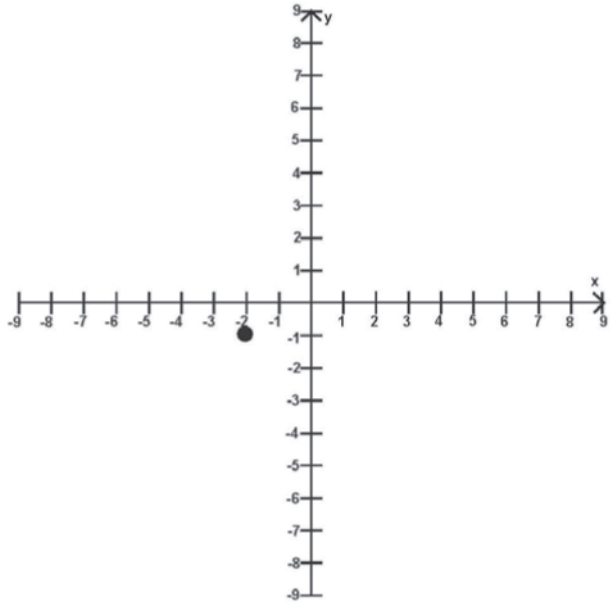

4. The x-coordinate is 0, so we do not move to the left or the right of the origin. The y-coordinate is 7, so we move up seven units. This means our point is not located in any of the quadrants. The point is located on the y-axis.

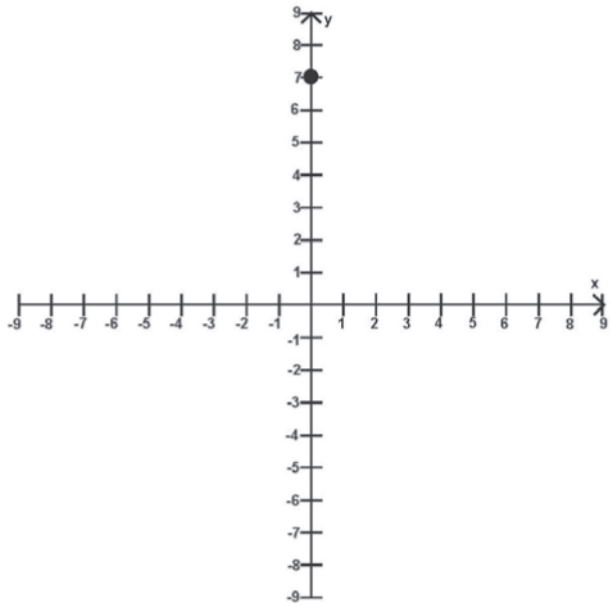

5. The x-coordinate is 4, so we move four units to the right of the origin. The y-coordinate is 6, so we move up six units. This means our point is in Quadrant I.

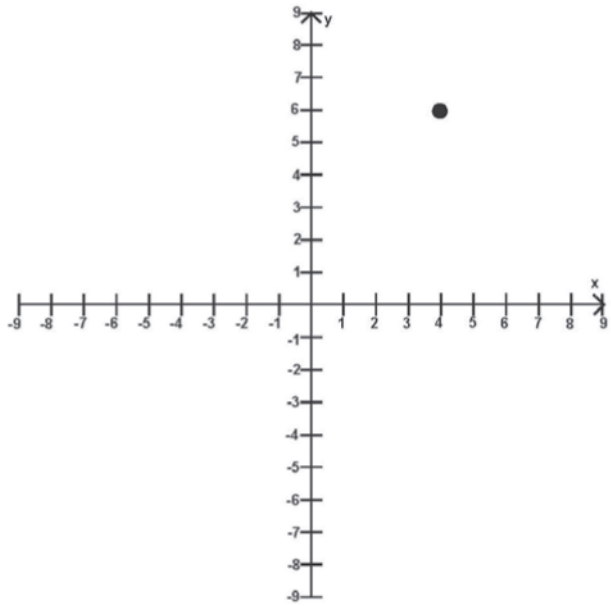

6. The x-coordinate of this point is 5 and the y-coordinate is 7. So the coordinates are (5, 7).
7. The x-coordinate of this point is −4 and the y-coordinate is 1. So the coordinates are (−4, 1).
8. The x-coordinate of this point is 3 and the y-coordinate is 0 (because the point lives on the x-axis). So the coordinates are (3, 0).
9. The x-coordinate of this point is 0 and the y-coordinate is −6. So the coordinates are (0, −6).
10. The x-coordinate of this point is −7 and the y-coordinate is −5. So the coordinates are (−7, −5).

Lesson 7

1. $2x - 5 = 3$

$2(4) - 5 = 3$

$8 - 5 = 3$

$3 = 3$

True

2. $12x + 78 = 18$

$12(-5) + 78 = 18$

$-60 + 78 = 18$

$18 = 18$

True

3. $t - 9 = 14$

$\underline{\quad +9 \quad +9 \quad}$

$t = 23$

4. $x + 8 = -29$

$\underline{\quad -8 \quad -8 \quad}$

$x = -37$

5. $y - 11 = -53$

$\underline{\quad +11 \quad +11 \quad}$

$y = -42$

6. $3x = 72$

$\frac{3x}{3} = \frac{72}{3}$

$x = 24$

7. $\frac{5}{7}x = 20$

$\left(\frac{7}{5}\right)\frac{5}{7}x = \left(\frac{7}{5}\right)20$

$x = (7)(4)$

$x = 28$

8. $6x - 7 = 47$

$\underline{\quad +7 \quad +7 \quad}$

$6x = 54$

$\frac{6x}{6} = \frac{54}{6}$

$x = 9$

9.

$$\frac{y}{2}+14 = -12$$

$$\underline{\quad -14 \qquad -14 \quad}$$

$$\frac{y}{2} = -26$$

$$2\left(\frac{y}{2}\right) = 2(-26)$$

$$y = -52$$

10.

$$-\frac{2}{3}x-7 = 12$$

$$\underline{\qquad +7 \qquad +7 \qquad}$$

$$-\frac{2}{3}x = 19$$

$$\left(-\frac{3}{2}\right)\left(-\frac{2}{3}x\right) = \left(-\frac{3}{2}\right)(19)$$

$$x = -\frac{57}{2}$$

Lesson 8

1. $2x + 14 + 7x = 5$

$9x + 14 = 5$

$9x = -9$

$x = -1$

2. $\frac{1}{2}x + \frac{2}{3}x = 14$

$6(\frac{1}{2}x + \frac{2}{3}x) = 6(14)$

$3x + 4x = 84$

$7x = 84$

$x = 12$

3. $5(t + 3) = 35$

$5t + 15 = 35$

$5t = 20$

$t = 4$

4. $-7(x - 4) = 63$

$-7x + 28 = 63$

$-7x = 35$

$x = -5$

5. $4y - 13 = -8y + 11$

$12y - 13 = 11$

$12y = 24$

$y = 2$

6. $-3x + 47 = 5x + 103$

$-8x + 47 = 103$

$-8x = 56$

$x = -7$

7. $-7x + 20 = -3x + 100$

$-4x + 20 = 100$

$-4x = 80$

$x = -20$

8. $3(7x - 8) = 7(3x + 2)$

$21x - 24 = 21x + 14$

$-24 = 14$

This equation is never true, so there are no solutions of the original equation.

9. $6(7x + 14) = 7(6x + 12)$

$42x + 84 = 42x + 84$

$84 = 84$

This equation is always true, so every number x is a solution. That means the original equation is an identity.

10. First let's convert \$7 to 700 cents. Next let C equal the number of cups of lemonade made over the weekend. Then the total cost is $700 + 15C$. How about the revenue or income? That will be $50C$. So we want these two quantities to be equal in order to break even.

$700 + 15C = 50C$

$700 = 35C$

$20 = C$

So your little brother will need to sell 20 cups of lemonade to break even.

Lesson 9

1. Two points on the line are (0, −3) and (2, 7). The slope then is

$$\frac{7-(-3)}{2-0}=\frac{7+3}{2}=\frac{10}{2}=5$$

2. Two points on the line are (−2, 11) and (3, −9). The slope then is

$$\frac{-9-11}{3-(-2)}=\frac{-20}{3+2}=\frac{-20}{5}=-4$$

3. Two points on the line are (−8, −2) and (6, 5). The slope then is

$$\frac{-2-5}{-8-6}=\frac{-7}{-14}=\frac{1}{2}$$

4. Two points on the line are (6, 0) and (−9, 10). The slope then is

$$\frac{10-0}{-9-6}=\frac{10}{-15}=\frac{2}{-3}=-\frac{2}{3}$$

5. Notice that this is a vertical line. We know that the slope of every vertical line is undefined (there is no slope). This can also be seen by using our formula for the slope using the two points (5, 2) and (5, −4). The slope equals

$\frac{2-(-4)}{5-5}=\frac{2+4}{0}=\frac{6}{0}$ This fraction is undefined (due to division by 0).

6. $\frac{10-(-8)}{7-3}=\frac{10+8}{4}=\frac{18}{4}=\frac{9}{2}$

7. $\frac{-5-7}{-2-13}=\frac{-12}{-15}=\frac{12}{15}=\frac{4}{5}$

8. $\frac{15-(-13)}{-4-10}=\frac{15+13}{-14}=\frac{28}{-14}=\frac{2}{-1}=-2$

9. $\frac{423-3}{10-3}=\frac{420}{7}=60$

10. $\frac{-12-(-12)}{13-8}=\frac{-12+12}{5}=\frac{0}{5}=0$. So these points live on a horizontal line.

Lesson 10

1. First note that the y-intercept is -5, so $b = -5$. Next we need to find the slope of the line. We see that two points on the line are $(0, -5)$ and $(2, -1)$. So the slope is

   $\frac{-1-(-5)}{2-0} = \frac{-1+5}{2} = \frac{4}{2} = 2$ Therefore, the slope-intercept form of the line is $y = 2x - 5$.

2. First note that the y-intercept is 1, so $b = 1$. Next we need to find the slope of the line. We see that two points on the line are $(0, 1)$ and $(4, 4)$. So the slope is

   $\frac{4-1}{4-0} = \frac{3}{4}$ Therefore, the slope-intercept form of the line is $y = (3/4)x + 1$.

3. First note that the y-intercept is 4, so $b = 4$. Next we need to find the slope of the line. We see that two points on the line are $(0, 4)$ and $(1, 1)$. So the slope is

   $\frac{1-4}{1-0} = \frac{-3}{1} = -3$ Therefore, the slope-intercept form of the line is $y = -3x + 4$.

4. First note that the y-intercept is -4, so $b = -4$. Next we need to find the slope of the line. We see that two points on the line are $(0, -4)$ and $(-10, 0)$. So the slope is

   $\frac{0-(-4)}{-10-0} = \frac{0+4}{-10} = \frac{4}{-10} = -\frac{2}{5}$ Therefore, the slope-intercept form of the line is $y = -(2/5)x - 4$.

5. First note that the y-intercept is 6, so $b = 6$. Next we need to find the slope of the line. We see that two points on the line are $(0, 6)$ and $(1, 6)$. So the slope is

   $\frac{6-6}{1-0} = \frac{0}{1} = 0$ Therefore, the slope-intercept form of the line is $y = 0x + 6$ or just $y = 6$.

6. First note that the y-intercept here will occur at $(0, -2)$, since $b = -2$. Next notice that the slope of the line is 4. This means, for example, that the point $(1, 2)$ is also on this line. The reason is that for every increase of 1 in the x-coordinate, we must add 4 to the y-coordinate, and $-2 + 4 = 2$.

   We can plot these two points and then draw the straight line going through the two points.

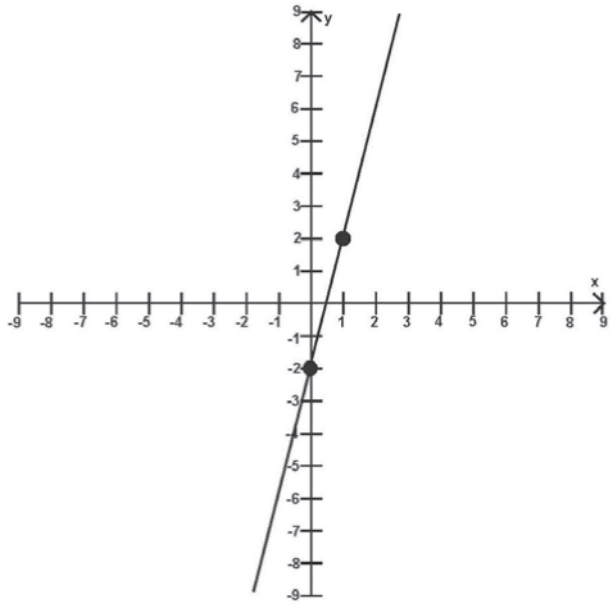

Solutions

7. First note that the y-intercept here will occur at (0, 7), since $b = 7$. Next notice that the slope of the line is -3. This means, for example, that the point (1, 4) is also on this line. The reason is that for every increase of 1 in the x-coordinate, we must add -3 to the y-coordinate, and $7 + (-3) = 7 - 3 = 4$.

We can plot these two points and then draw the straight line going through the two points.

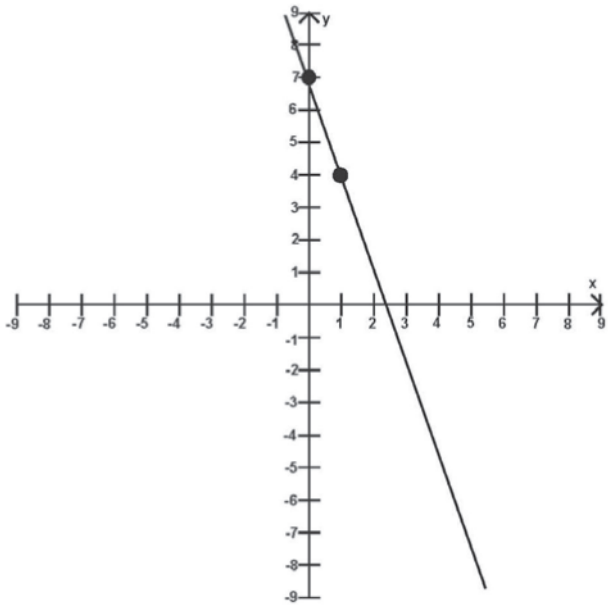

8. First note that the y-intercept here will occur at (0, 5), since $b = 5$. Next notice that the slope of the line is 4/3. This means, for example, that the point (3, 9) is also on this line. The reason is that for every increase of 1 in the x-coordinate, we must add 4/3 to the y-coordinate. So for every increase of 3 in the x-coordinate, we must add 4/3 + 4/3 + 4/3, or 4, to the y-coordinate, and $5 + 4 = 9$.

We can plot these two points and then draw the straight line going through the two points.

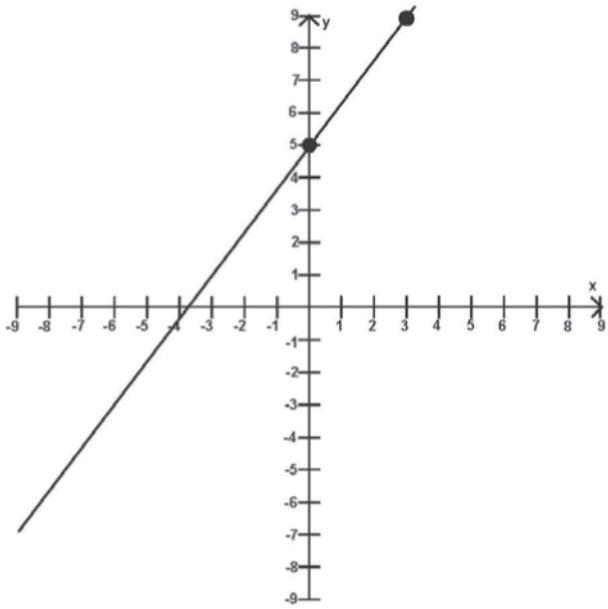

x	0	1	2	3	4
y	-7	-4	-1	2	5

9. Note that the y-intercept of this line has been given to us. It is the point $(0, -7)$. So $b = -7$ in this equation. Next we must determine the slope of the line. Using the two points $(3, 2)$ and $(4, 5)$, we know the slope is given by

$\frac{5-2}{4-3} = \frac{3}{1} = 3$ Therefore, the slope-intercept form of the equation is $y = 3x - 7$.

10. Note that the y-intercept of this line has been given to us. It is the point $(0, 2)$. So $b = 2$ in this equation. Next we must determine the slope of the line. Using the two points $(5, -13)$ and $(0, 2)$, we know the slope is given by

$\frac{2-(-13)}{0-5} = \frac{2+13}{-5} = \frac{15}{-5} = -3$ Therefore, the slope-intercept form of the equation is $y = -3x + 2$.

Lesson 11

1. Notice that there are two points that live on this line. They are (−1, 0) and (2, 2). From these we can find the slope of the line.

   $\frac{2-0}{2-(-1)} = \frac{2}{3}$ Therefore, the point-slope form of the line is $y - 2 = (2/3)(x - 2)$. We could also write it as

   $y - 0 = (2/3)(x - (-1))$ or $y = (2/3)(x + 1)$ or $y = (2/3)x + 2/3$

2. Notice that there are two points that live on this line. They are (1, 7) and (5, 1). From these we can find the slope of the line.

   $\frac{1-7}{5-1} = \frac{-6}{4} = -\frac{3}{2}$ Therefore, the point-slope form of the line is $y - 7 = (-3/2)(x - 1)$. This can be rewritten in slope-intercept form as follows.

   $y - 7 = (-3/2)(x - 1)$

   $y - 7 = (-3/2)x + 3/2$

   $y = (-3/2)x + 17/2$

3. Notice that there are two points that live on this line. They are (−4, −3) and (2, 5). From these we can find the slope of the line.

   $\frac{5-(-3)}{2-(-4)} = \frac{5+3}{2+4} = \frac{8}{6} = \frac{4}{3}$ Therefore, the point-slope form of the line is $y - (-3) = (4/3)(x - (-4))$ or

   $y + 3 = (4/3)(x + 4)$. This can be rewritten in slope-intercept form as follows.

   $y + 3 = (4/3)(x + 4)$

   $y + 3 = (4/3)x + (16/3)$

   $y = (4/3)x + 7/3$

4. Notice that there are two points that live on this line. They are (1, −5) and (−7, −4). From these we can find the slope of the line.

   $\frac{-4-(-5)}{-7-1} = \frac{-4+5}{-8} = -\frac{1}{8}$ Therefore, the point-slope form of the line is

   $y - (-5) = (-1/8)(x - 1)$ or $y + 5 = (-1/8)(x - 1)$. This can be rewritten in slope-intercept form as follows.

   $y + 5 = (-1/8)(x - 1)$

   $y + 5 = (-1/8)x + 1/8$

   $y = (-1/8)x - 39/8$

5. First note that the slope equals

   $\frac{5-0}{-3-7} = \frac{5}{-10} = -\frac{1}{2}$

   Thus, the point-slope formula of the equation of the line, using the point (7, 0), is given by

   $y - 0 = (-1/2)(x - 7)$. This can be converted to the slope-intercept form of the equation as follows.

   $y = (-1/2)(x - 7)$

   $y = (-1/2)x + 7/2$

6. First note that the slope equals

$$\frac{20-2}{10-1}=\frac{18}{9}=2$$

Thus, the point-slope formula of the equation of the line, using the point (1, 2), is given by $y - 2 = 2(x - 1)$. This can be converted to the slope-intercept form of the equation as follows.

$y - 2 = 2(x - 1)$

$y - 2 = 2x - 2$

$y = 2x$

7. First note that the slope equals

$$\frac{10-(-6)}{2-4}=\frac{10+6}{-2}=-\frac{16}{2}=-8$$

Thus, the point-slope formula of the equation of the line, using the point (2, 10), is given by $y - 10 = -8(x - 2)$. This can be converted to the slope-intercept form of the equation as follows.

$y - 10 = -8(x - 2)$

$y - 10 = -8x + 16$

$y = -8x + 26$

8. We know that the slope of the line is $m = 3$ (since this equation is in point-slope form). We also know that the point (7, 2) is on the line. Therefore, we also know that the point (7 + 1, 2 + 3) or (8, 5) is also on the line (since the slope is 3). We can plot these two points and sketch the line connecting them.

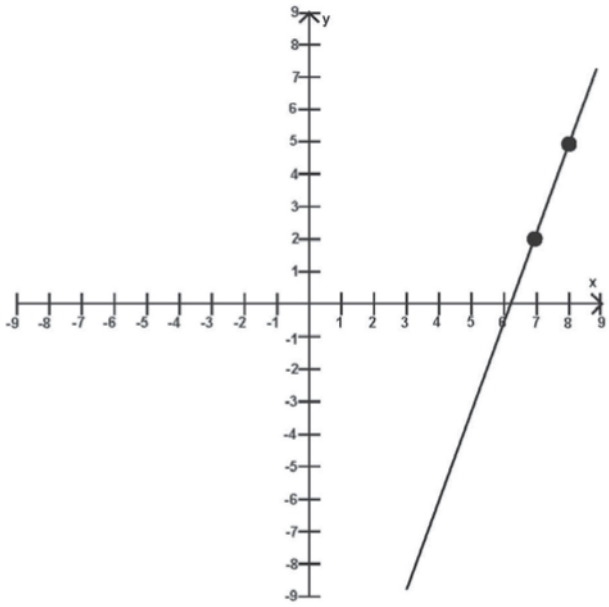

9. We know that the slope of the line is $m = 1/2$ (since this equation is in point-slope form). We also know that the point $(4, -12)$ is on the line since $y + 12$ is the same as $y - (-12)$. Therefore, we also know that the point $(4 + 2, -12 + 1)$, or $(6, -11)$, is also on the line (since the slope is 1/2). We can plot these two points and sketch the line connecting them.

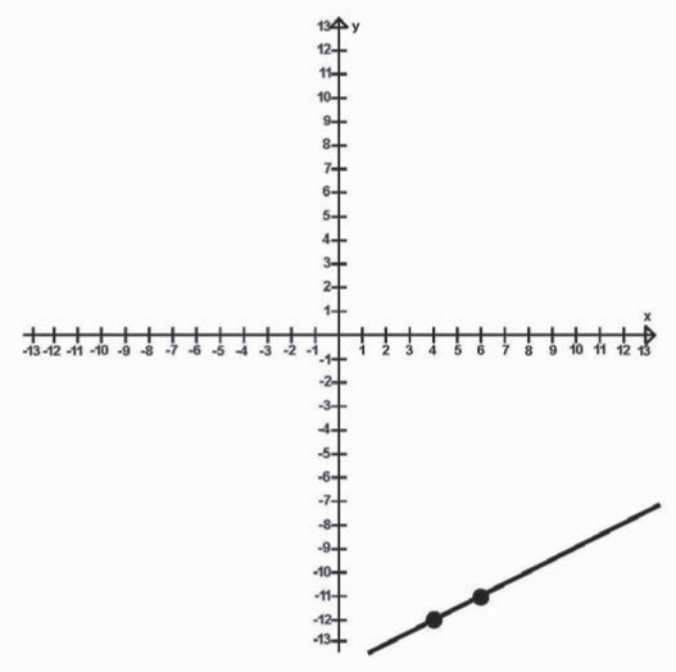

10. We know that the slope of the line is $m = -5$ (since this equation is in point-slope form). We also know that the point $(-3, -2)$ is on the line. Therefore, we also know that the point $(-3 + 1, -2 - 5)$ or $(-2, -7)$ is also on the line (since the slope is -5). We can plot these two points and sketch the line connecting them.

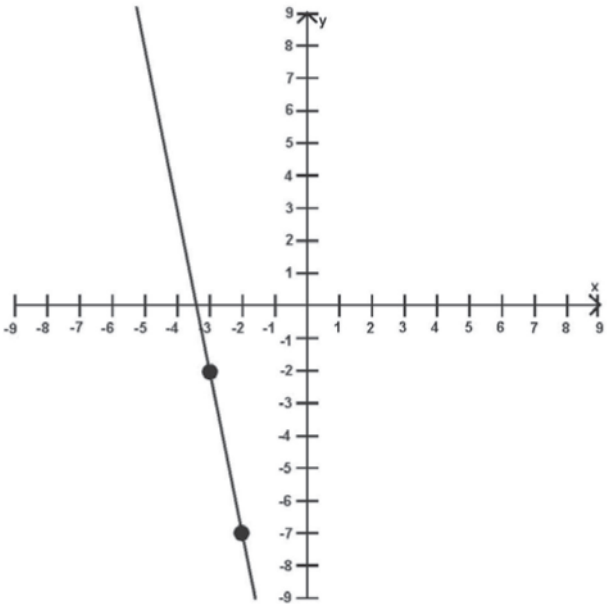

Lesson 12

1. These two lines are parallel, as they both have the same slope ($m = 5$) but different y-intercepts.
2. These two lines are NOT parallel, as their slopes are different. One has slope $m = 2$ and the other has slope $m = -2$.
3. We see the slope of the second line is $m = -2/5$. We can rewrite the first equation in slope-intercept form to see what the slope of that line is.

   $2x + 5y = 10$

   $5y = -2x + 10$

   $y = (-2/5)x + 2$

   So the slope of this line is also $m = -2/5$. Therefore, these two lines are parallel.
4. The slope of the new line must equal the slope of the given line, which is 7. So the equation of the new line can be written in point-slope form as $y - 8 = 7(x - 3)$. This can be rewritten as

   $y - 8 = 7(x - 3)$

   $y - 8 = 7x - 21$

   $y = 7x - 13$
5. The slope of the new line must equal the slope of the given line, which is -10. So the equation of the new line can be written in point-slope form as $y - (-4) = (-10)(x - (-5))$. This can be rewritten as

   $y - (-4) = (-10)(x - (-5))$

   $y + 4 = (-10)(x + 5)$

   $y + 4 = -10x - 50$

   $y = -10x - 54$
6. In order to be perpendicular, the slopes of these two lines must be negative reciprocals of each other. In this case, the two slopes are $m = 2$ and $m = -2$. These are NOT negative reciprocals of each other. (They are the negatives of each other, but not negative reciprocals.) So these two lines are NOT perpendicular.

   Here is a plot of the two lines.

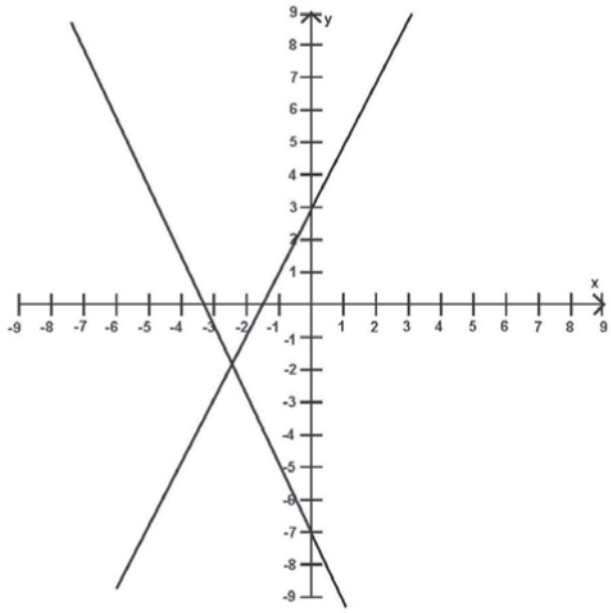

7. In order to be perpendicular, the slopes of these two lines must be negative reciprocals of each other. In this case, the two slopes are $m = 4$ and $m = -1/4$. These are negative reciprocals of each other. So these two lines are perpendicular.

Here is a plot of the two lines.

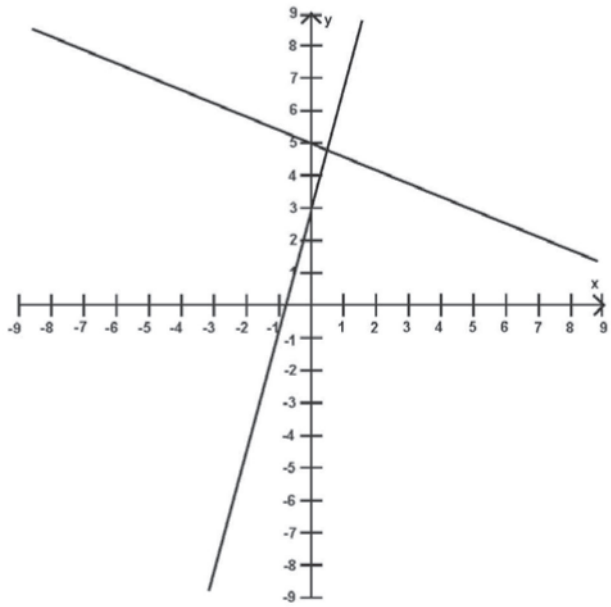

8. In order to be perpendicular, the slopes of these two lines must be negative reciprocals of each other. In this case, the two slopes are $m = 8/3$ and $m = 3/8$. These are not negative reciprocals of each other. (They are reciprocals of each other, but they are not negatives of each other.) So these two lines are not perpendicular.

Here is a plot of the two lines.

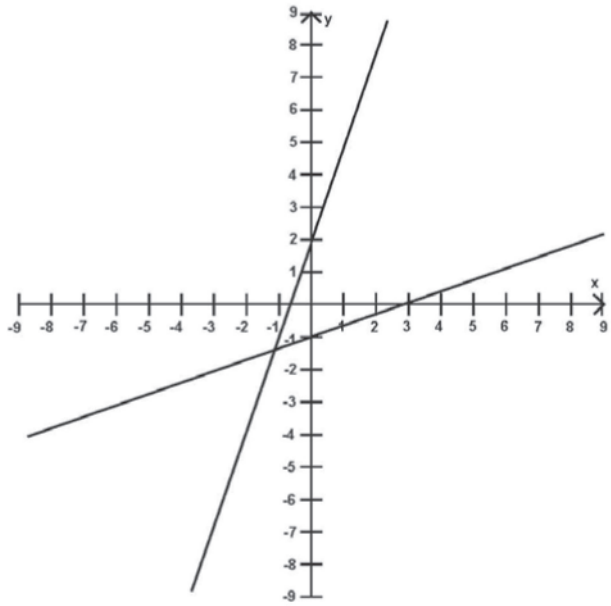

9. We know that the slope of the given line is $m = 3/5$. Therefore, the slope of the new line must be $-5/3$. Therefore, using the slope-intercept form of the new line, we have the equation

$y = (-5/3)x + 3$

10. $y = (1/4)x - 1$ and goes through the point $(-3, 11)$.

We know that the slope of the given line is $m = 1/4$. Therefore, the slope of the new line must be $-4/1$ or -4. Therefore, using the point-slope form of the new line, we have the equation

$y - 11 = -4(x - (-3))$

$y - 11 = -4(x + 3)$

$y - 11 = -4x - 12$

$y = -4x - 1$

Lesson 13

1. The points in the xy-plane that are represented in this table include the following.

   (0, 7), (1, 12), (2, 17), (3, 22), (4, 27), (5, 32)

   If the slope between each consecutive pair of points is the same, then we know that this table describes a linear equation. So let's calculate these slopes.

   $(12 - 7) / (1 - 0) = 5/1 = 5$

   $(17 - 12) / (2 - 1) = 5/1 = 5$

   $(22 - 17) / (3 - 2) = 5/1 = 5$

   $(27 - 22) / (4 - 3) = 5/1 = 5$

   $(32 - 27) / (5 - 4) = 5/1 = 5$

   So each of these points lives on a straight line with slope 5. This table does describe a linear equation. (In fact, the straight line is given by $y = 5x + 7$.)

2. The points in the xy-plane that are represented in this table include the following.

   (−2, 8), (−1, −1), (0, −10), (1, −19), (2, −28)

   If the slope between each consecutive pair of points is the same, then we know that this table describes a linear equation. So let's calculate these slopes.

   $(-1 - 8) / (-1 - (-2)) = -9/1 = -9$

   $(-10 - (-1)) / (0 - (-1)) = -9/1 = -9$

   $(-19 - (-10)) / (1 - 0) = -9/1 = -9$

   $(-28 - (-19)) / (2 - 1) = -9/1 = -9$

   So each of these points lives on a straight line with slope −9. This table does describe a linear equation. (In fact, the straight line is given by $y = -9x - 10$.)

3. The points in the xy-plane that are represented in this table include the following.

   (−1, −1), (0, 0), (1, 1), (2, 8)

   If the slope between each consecutive pair of points is the same, then we know that this table describes a linear equation. So let's calculate these slopes.

   $(0 - (-1)) / (0 - (-1)) = 1/1 = 1$

   $(1 - 0) / (1 - 0) = 1/1 = 1$

   $(8 - 1) / (2 - 1) = 7/1 = 7$

   These slopes are not all equal! Therefore, the table does not represent a linear equation. (In fact, these points all satisfy the equation $y = x^3$, is not linear.)

4. We see in this problem that *all* the y-coordinates are the same, so all these points lie on a horizontal line whose equation is $y = 4$. We can also check that these points all live on the same line by calculating all the slopes between consecutive points. In every case, we find that the slope is 0.

5. The points in the xy-plane that are represented in this table include the following.

   (1, 0), (2, 1), (3, 4), (4, 9)

   If the slope between each consecutive pair of points is the same, then we know that this table describes a linear equation. So let's calculate these slopes.

   $(1 - 0) / (2 - 1) = 1/1 = 1$

   $(4 - 1) / (3 - 2) = 3/1 = 3$

   These slopes are not all equal! Therefore, the table does not represent a linear equation. (In fact, these points all satisfy the equation $y = (x - 1)^2$, which is not linear.)

6. The points in the xy-plane that are represented in this table include the following.

(0, 3/2), (2, 5/2), (4, 7/2), (5, 4)

If the slope between each consecutive pair of points is the same, then we know that this table describes a linear equation. So let's calculate these slopes.

$(5/2 - 3/2) / (2 - 0) = 1/2$

$(7/2 - 5/2) / (4 - 2) = 1/2$

$(4 - 7/2) / (5 - 4) = (1/2)/1 = 1/2$

So each of these points lives on a straight line with slope 1/2. This table does describe a linear equation. (In fact, the straight line is given by $y = (1/2)x + 3/2$.)

Lesson 14

1. $C = (5/9)(F - 32)$
   $C = (5/9)(95 - 32)$
   $C = (5/9)(63)$
   $C = 5 \times 7$
   $C = 35$
   So 95°F equals 35°C.
2. $C = (5/9)(F - 32)$
   $C = (5/9)(107 - 32)$
   $C = (5/9)(75)$
   $C = (5/3)(25)$
   $C = 125/3$
   $C = 41\ 2/3$
   So 107°F equals 41 2/3°C.
3. $C = (5/9)(F - 32)$
   $20 = (5/9)(F - 32)$
   $(9/5)20 = (9/5)(5/9)(F - 32)$
   $36 = F - 32$
   $68 = F$
   So 20°C equals 68°F.
4. Let x equal the number of yards Bill has cut. Let y equal the total amount of money Bill has in his bank account after cutting x yards. Then a linear equation that tells us how much money Bill has in the bank after x yards are cut is $y = 25x + 42$.
5. $y = 25x + 42$
   $y = 25(12) + 42$
   $y = 300 + 42$
   $y = 342$
   So Bill will have $342 in the bank after cutting 12 yards.
6. Bill will have cut yards 20 times over the month, so $x = 20$ in this case.
   $y = 25x + 42$
   $y = 25(20) + 42$
   $y = 500 + 42$
   $y = 542$
   So Bill will have $542 in the bank after cutting these yards in June.
7. $y = 25x + 42$
   $1{,}000 = 25x + 42$
   $958 = 25x$
   $958 / 25 = x$
   $x = 38.32$
   So in order to have at least $1,000 in the bank, Bill will need to cut 39 yards. (If he only cuts 38 yards, he will have ALMOST $1,000, but not quite.)

8. Let t = the number of weeks that have passed in the year.

Let y = the number of cans of soup still in the food bank.

Then an equation that tells us how many cans of soup are still in the food bank after t weeks is $y = -12t + 816$. (Notice that we need -12 here, not $+12$, because the number of cans is going *down* as the food bank gives them away.) So the slope of the line here is -12.

9. $y = -12t + 816$

$y = -12(26) + 816$

$y = 504$

So there are 504 cans of soup still in the food bank after half the year has passed.

10. When the food bank runs out of cans of soup, we have $y = 0$.

$y = -12t + 816$

$0 = -12t + 816$

$12t = 816$

$t = 68$

So the food bank will run out of soup after 68 weeks.

Lesson 15

1. The following is a graph of the two lines.

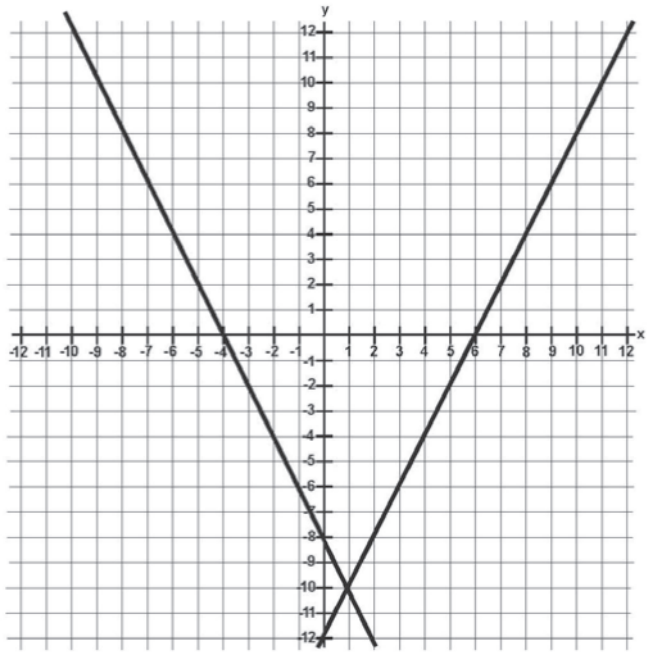

Notice that the two graphs cross at the point (1, −10). Therefore, the solution of this system is (1, −10), which is the same as $x = 1$ and $y = -10$.

2. The following is a graph of the two lines.

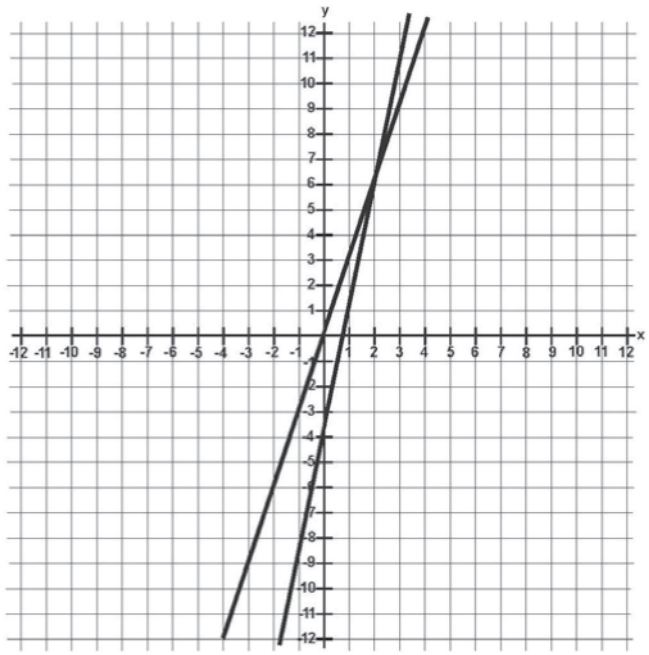

Notice that the two graphs cross at the point (2, 6). Therefore, the solution of this system is (2, 6), which is the same as $x = 2$ and $y = 6$.

3. The following is a graph of the two lines.

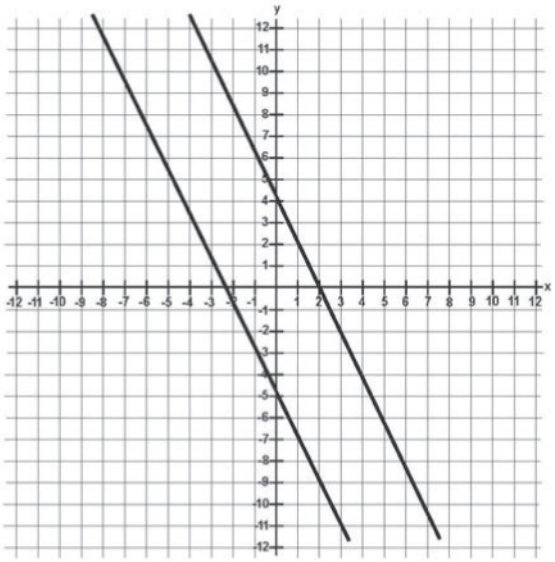

We see that the two lines are parallel, so they do not have an intersection. Therefore, there is no solution to this system of equations.

4. We begin by rewriting the two equations in slope-intercept form.

$6x + 2y = 16$

$2y = -6x + 16$

$y = -3x + 8$

$6x - 3y = 36$

$-3y = -6x + 36$

$y = 2x - 12$

The following is a graph of the two lines.

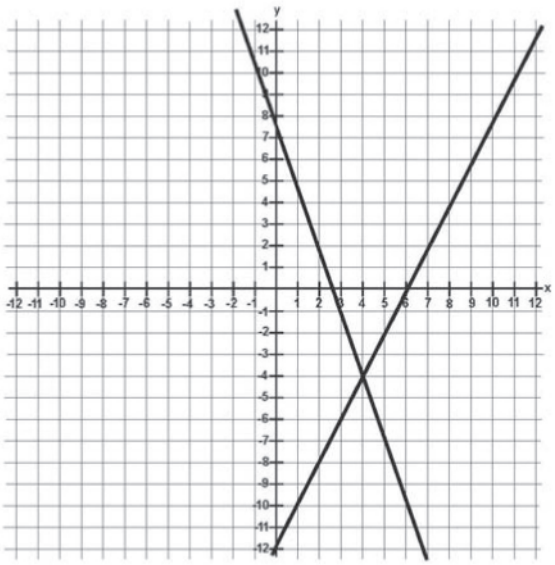

Notice that the two graphs cross at the point (4, −4). Therefore, the solution of this system is (4, −4), which is the same as $x = 4$ and $y = -4$.

5. We begin by rewriting the second equation in slope-intercept form. (The first equation is already in slope-intercept form.)

$25x + 5y = 60$

$5y = -25x + 60$

$y = -5x + 12$

So we have the new system of equations.

$y = 5x + 2$

$y = -5x + 12$

The following is a graph of the two lines.

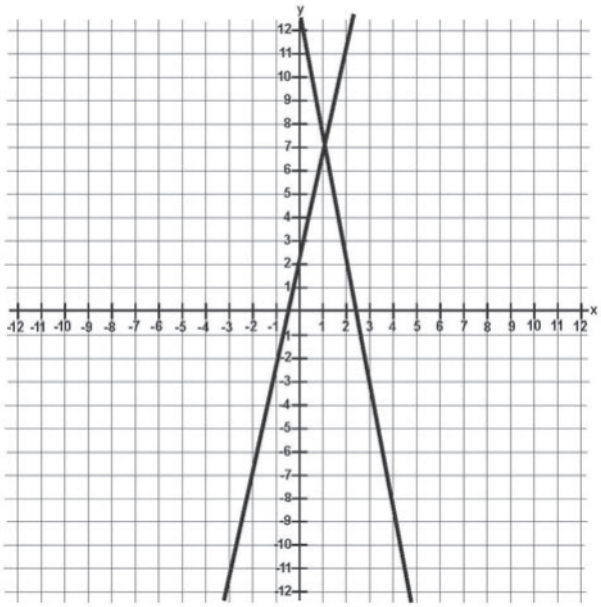

Notice that the two graphs cross at the point (1, 7). Therefore, the solution of this system is (1, 7), which is the same as $x = 1$ and $y = 7$.

6. We begin by substituting $2x + 30$ for y in the first equation (since $y = 2x + 30$). So we have

$4x + 3y = 10$

$4x + 3(2x + 30) = 10$

$4x + 6x + 90 = 10$

$10x + 90 = 10$

$10x = -80$

$x = -8$

Then $y = 2x + 30 = 2(-8) + 30 = -16 + 30 = 14$. So the solution is $(-8, 14)$.

7. We begin by substituting $3x - 2$ for y in the first equation (since $y = 3x - 2$). So we have

$2x + 5y = 24$

$2x + 5(3x - 2) = 24$

$2x + 15x - 10 = 24$

$17x - 10 = 24$

$17x = 34$

$x = 2$

Then $y = 3x - 2 = 3(2) - 2 = 6 - 2 = 4$. So the solution is $(2, 4)$.

8. We begin by substituting $-2x + 28$ for y in the first equation (since $y = -2x + 28$). So we have

$y = 6x - 4$

$-2x + 28 = 6x - 4$

$-8x + 28 = -4$

$-8x = -32$

$x = 4$

Then $y = 6x - 4 = 6(4) - 4 = 24 - 4 = 20$. So the solution is (4, 20).

9. We begin by substituting $-2x + 1$ for y in the first equation (since $y = -2x + 1$). So we have

$4x + 2y = 34$

$4x + 2(-2x + 1) = 34$

$4x - 4x + 2 = 34$

$0 + 2 = 34$

$2 = 34$

This equation is not true for any value of x. So there is no solution to this system.

10. We begin by solving the second equation for the variable x.

$4y + x = -4$

$x = -4y - 4$

We now substitute $-4y - 4$ for x in the equation $5y + 3x = 2$. So we have

$5y + 3x = 2$

$5y + 3(-4y - 4) = 2$

$5y - 12y - 12 = 2$

$-7y - 12 = 2$

$-7y = 14$

$y = -2$

Then $x = -4y - 4 = -4(-2) - 4 = 8 - 4 = 4$. So the solution is (4, −2).

Lesson 16

1. We add the two equations to eliminate the variable y. Once we add the equations, we have $5x = 55$. Then $x = 11$ after dividing by 5.

   Now we substitute $x = 11$ into either of the original equations to determine y.

   $2x + y = 9$

   $2(11) + y = 9$

   $22 + y = 9$

   $y = -13$

   So the solution is $(11, -13)$.

2. We add the two equations to eliminate the variable x. Once we add the equations, we have $8y = 48$. Then $y = 6$ after dividing by 8.

   Now we substitute $y = 6$ into either of the original equations to determine x.

   $4x + 3y = 20$

   $4x + 3(6) = 20$

   $4x + 18 = 20$

   $4x = 2$

   $x = 1/2$

   So the solution is $(1/2, 6)$.

3. We subtract the two equations to eliminate the variable x. Once we subtract the equations, we have $-11y = 44$. Then, $y = -4$ after dividing by -11.

   Now we substitute $y = -4$ into either of the original equations to determine x.

   $3x - 4y = 10$

   $3x - 4(-4) = 10$

   $3x + 16 = 10$

   $3x = -6$

   $x = -2$

   So the solution is $(-2, -4)$.

4. We subtract the two equations to eliminate the variable y. Once we subtract the equations, we have $0 = -9$. (Notice that *both* variables x and y have been eliminated, not just one variable.) But the equation $0 = -9$ has no solutions. Therefore, the original system of equations has no solutions.

5. We multiply the first equation by 4 to obtain a new system of equations.

   $8x - 4y = 36$

   $3x + 4y = -14$

   Now we add the two equations to get $11x = 22$, and the variable y is eliminated. Dividing both sides by 11 gives $x = 2$. Now we substitute $x = 2$ into one of the original equations to determine y.

   $2x - y = 9$

   $2(2) - y = 9$

   $4 - y = 9$

   $-y = 5$

   $y = -5$

   So the solution is $(2, -5)$.

6. We multiply the first equation by 2 to obtain a new system of equations.

$4x + 10y = 24$

$-4x + 4y = 18$

Now we add the two equations to get $14y = 42$, and the variable x is eliminated. Dividing both sides by 14 gives $y = 3$. Now we substitute $y = 3$ into one of the original equations to determine x.

$2x + 5y = 12$

$2x + 5(3) = 12$

$2x + 15 = 12$

$2x = -3$

$x = -3/2$

So the solution is $(-3/2, 3)$.

7. We multiply the second equation by 2 to obtain a new system of equations.

$14x - 12y = 10$

$-14x + 12y = 26$

Now we add the two equations to get $0 = 36$, and the variables x and y are eliminated. There are no solutions to the equation $0 = 36$, so there are no solutions to the original system of equations.

8. We multiply the first equation by 5 and the second equation by 4 to obtain a new system of equations.

$15x - 20y = -50$

$8x + 20y = 280$

Now we add the two equations to eliminate y. This gives $23x = 230$ or $x = 10$ after dividing both sides by 23. We substitute $x = 10$ into one of the original equations to determine y.

$2x + 5y = 70$

$2(10) + 5y = 70$

$20 + 5y = 70$

$5y = 50$

$y = 10$

So the solution is $(10, 10)$.

9. We multiply the first equation by 3 and the second equation by 2 to obtain a new system of equations.

$6x + 12y = 42$

$-6x + 14y = -16$

Now we add the two equations to eliminate x. This gives $26y = 26$ or $y = 1$ after dividing both sides by 26. We substitute $y = 1$ into one of the original equations to determine x.

$2x + 4y = 14$

$2x + 4(1) = 14$

$2x + 4 = 14$

$2x = 10$

$x = 5$

So the solution is $(5, 1)$.

10. We multiply the first equation by 3 to get a new system of equations.

$12x + 18y = 15$

$-12x - 18y = -15$

Now add the two equations to get $0 = 0$. This equation is always true, so the set of solutions is the set of ALL points on the line $4x + 6y = 5$. (In other words, both equations in the original system are the equations of the SAME line.) So there are infinitely many different solutions.

Lesson 17

1. We first graph the line whose equation is $y = 2x + 3$.

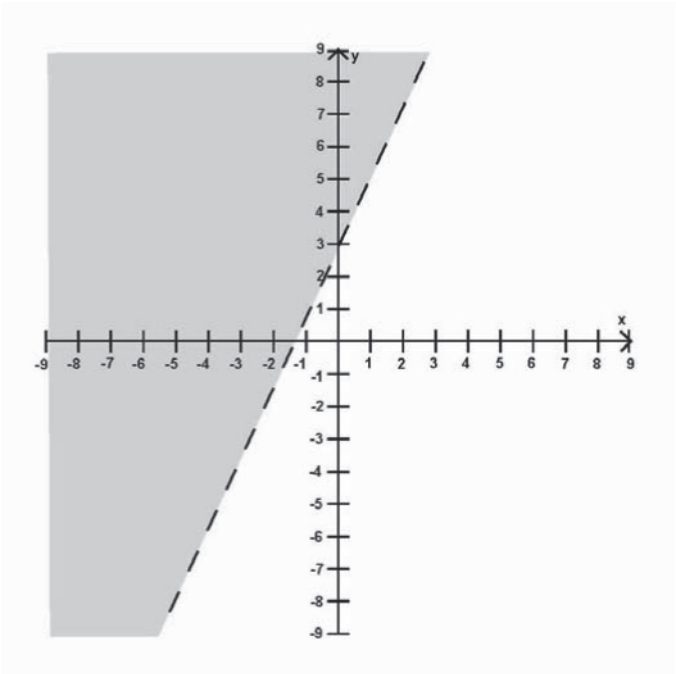

The line is drawn in a dashed fashion because the original inequality is a strict inequality ("greater than" rather than "greater than or equal to"). We then shade in the portion of the Cartesian plane that is above this line.

2. We first graph the line whose equation is $y = 4x - 1$.

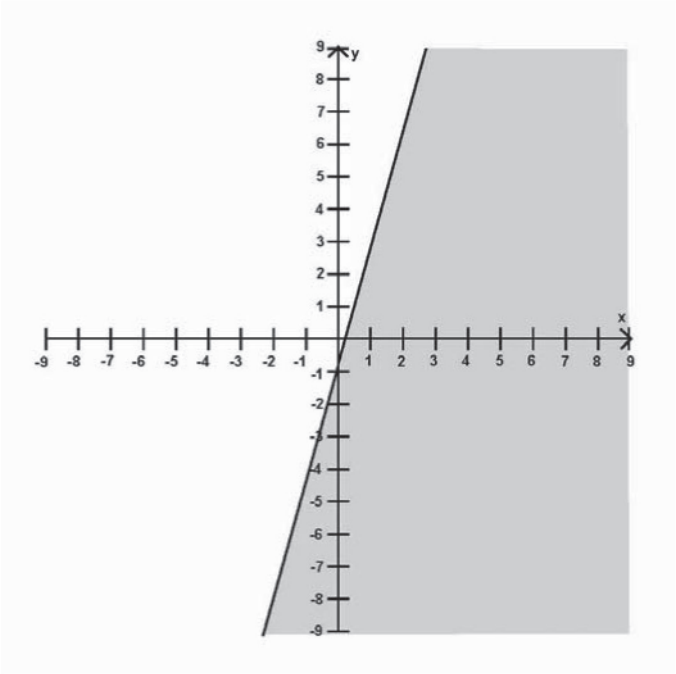

The line is drawn in a solid fashion because the original inequality is "less than or equal to" rather than "less than"). We then shade in the portion of the Cartesian plane that is below this line.

3. We first graph the line whose equation is $y = \frac{1}{3}x - 2$.

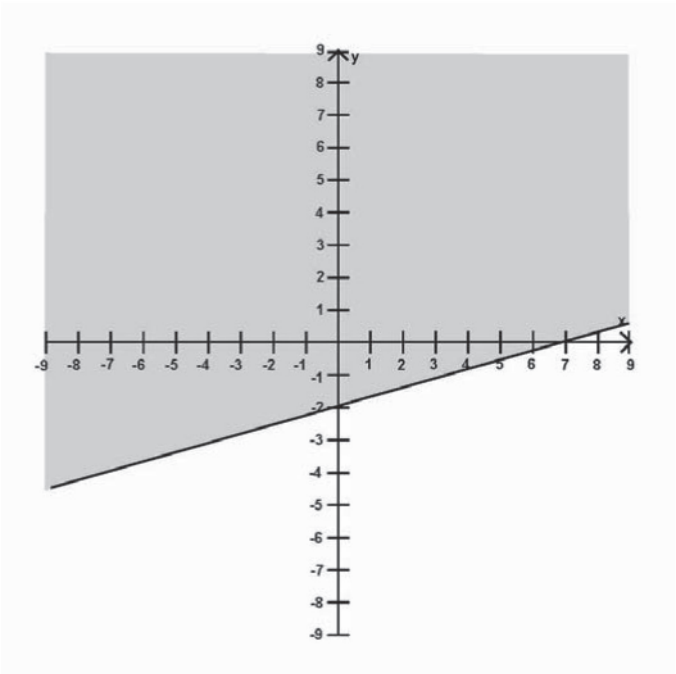

The line is drawn in a solid fashion because the original inequality is "greater than or equal to" rather than "greater than"). We then shade in the portion of the Cartesian plane that is above this line.

4. We first graph the line whose equation is $y = -\frac{2}{3}x + 4$.

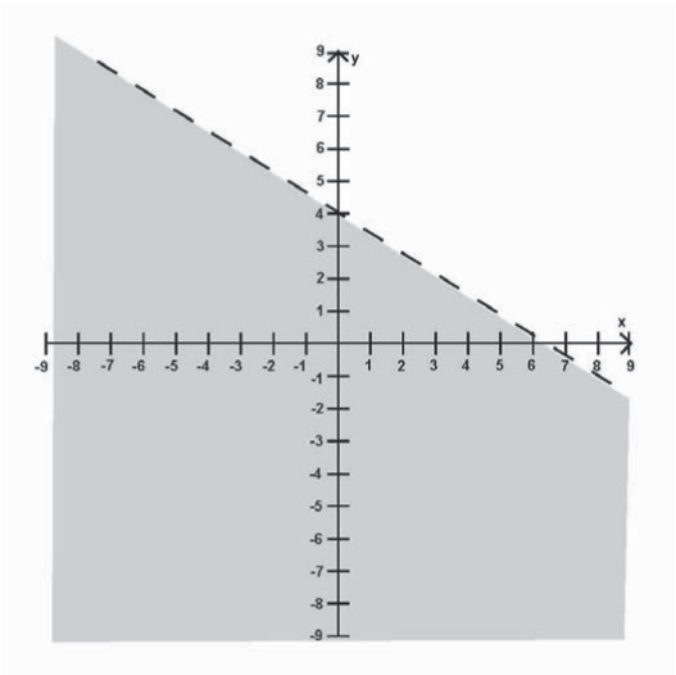

The line is drawn in a dashed fashion because the original inequality is "less than" rather than "less than or equal to"). We then shade in the portion of the Cartesian plane that is below this line.

5. We first graph the line whose equation is $x = -5$.

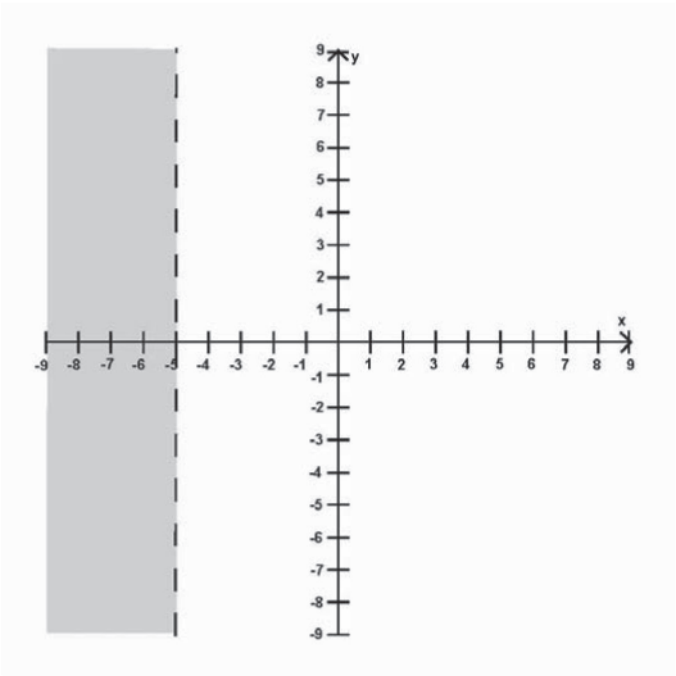

The line is drawn in a dashed fashion because the original inequality is "less than" rather than "less than or equal to"). We then shade in the portion of the Cartesian plane that is to the left of this line.

6. We first graph the line whose equation is $y = \frac{3}{2}$.

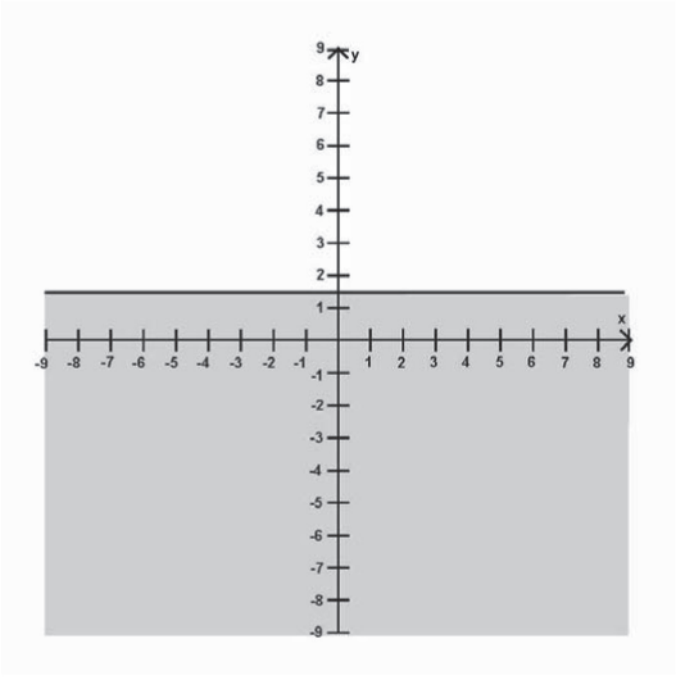

The line is drawn in a solid fashion because the original inequality is "less than or equal to" rather than "less than"). We then shade in the portion of the Cartesian plane that is below this line.

7. We first graph the line whose equation is $4x - 6y = 10$. In order to do so, we rewrite this equation in point-slope form.

$4x - 6y = 10$

$-6y = -4x + 10$

$y = (2/3)x - 5/3$

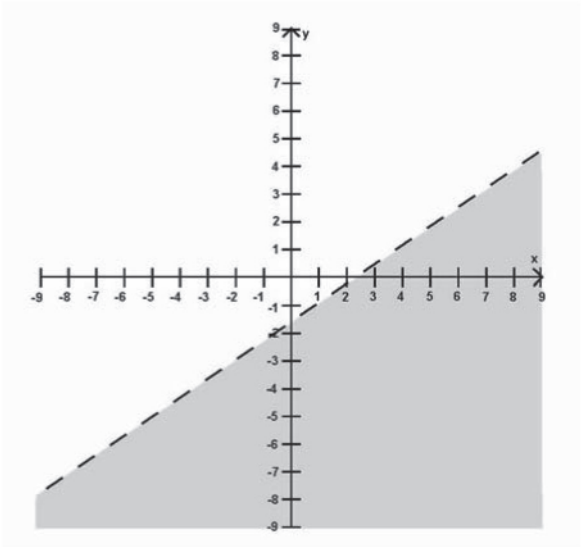

The line is drawn in a dashed fashion because the original inequality is a strict inequality ("greater than" rather than "greater than or equal to"). We then shade in the portion of the Cartesian plane that is below this line.

8. We first graph the line whose equation is $-2x - 3y = 9$. In order to do so, we rewrite this equation in point-slope form.

$-2x - 3y = 9$

$-3y = 2x + 9$

$y = (-2/3)x - 3$

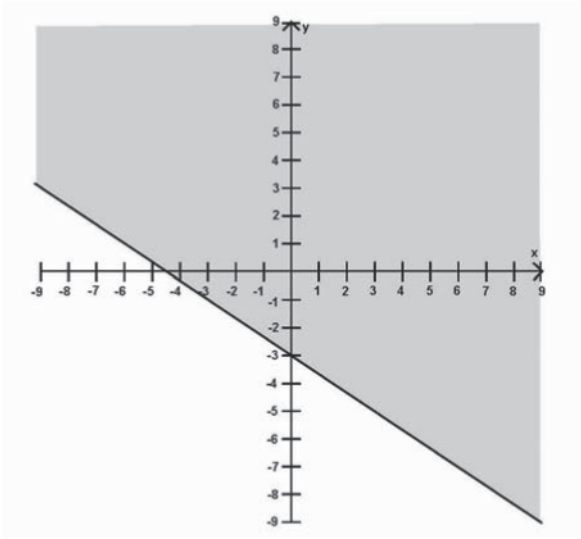

The line is drawn in a solid fashion because the original inequality is "less than or equal to" rather than "less than"). We then shade in the portion of the Cartesian plane that is above this line.

9. We first graph the line whose equation is $2x = -5y + 1$. In order to do so, we rewrite this equation in point-slope form.

$2x = -5y + 1$

$2x + 5y = 1$

$5y = -2x + 1$

$y = (-2/5)x + 1/5$

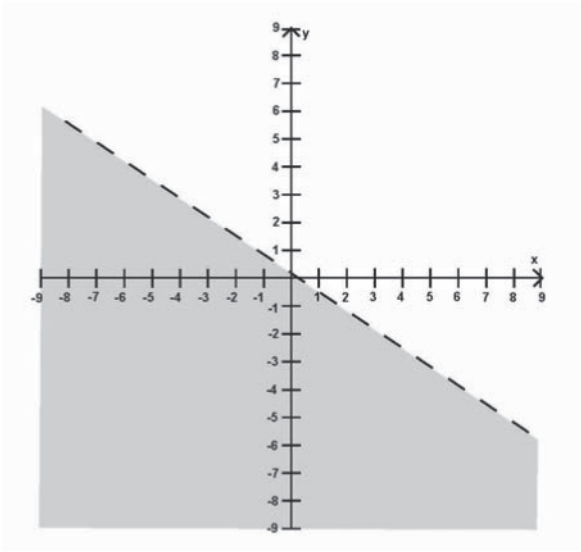

The line is drawn in a dashed fashion because the original inequality is "less than" rather than "less than or equal to"). We then shade in the portion of the Cartesian plane that is below this line.

10. We first graph the line whose equation is $12y + 96 = 0$. In order to do so, we rewrite this equation in point-slope form.

$12y + 96 = 0$

$12y = -96$

$y = -8$

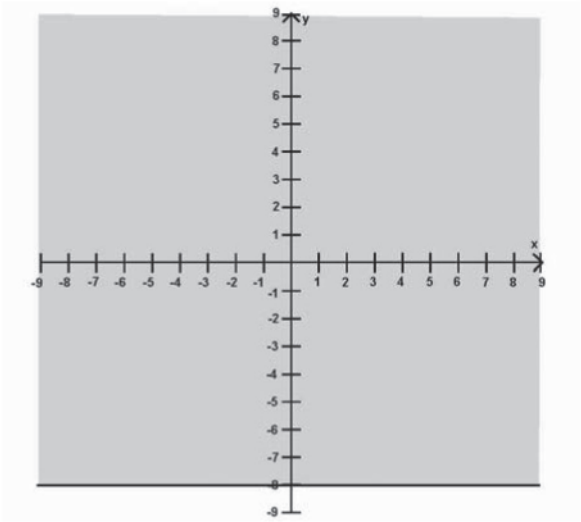

The line is drawn in a solid fashion because the original inequality is "greater than or equal to" rather than "greater than"). We then shade in the portion of the Cartesian plane that is above this line.

Lesson 18

1. The graph of this quadratic opens upward because the coefficient of the x^2 term is 3 and this is positive.

To confirm this answer, here is the graph of $3x^2 - 5x + 2$.

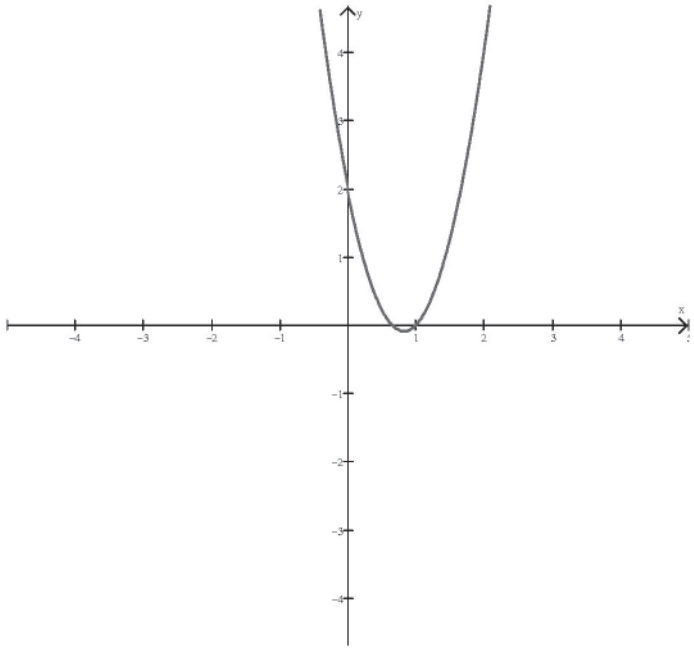

2. The graph of this quadratic opens downward because the coefficient of the x^2 term is -1 and this is negative.

To confirm this answer, here is the graph of $-x^2 + x + 2$.

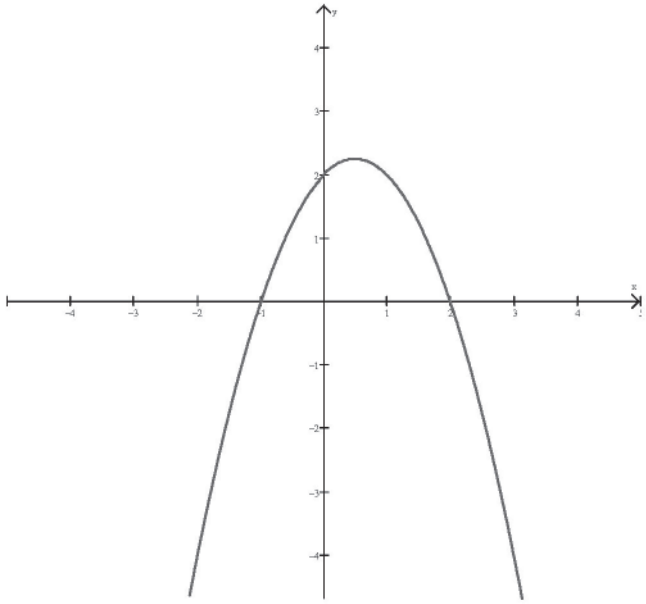

Solutions

3. $4x(3x - 10)$

$= (4x)(3x) - (4x)(10)$

$= 12x^2 - 40x$

4. $15x^2 + 20x - 50$

$= 5(3x^2 + 4x - 10)$

5. $(A - 2)(A - 8)$

$= A^2 - 8A - 2A + 16$

$= A^2 - 10A + 16$

6. $(x + 7)(x - 3)$

$= x^2 - 3x + 7x - 21$

$= x^2 + 4x - 21$

7. $(3x + 2)(7x + 4)$

$= 21x^2 + 12x + 14x + 8$

$= 21x^2 + 26x + 8$

8. $(5y - 1)(3y + 9)$

$= 15y^2 + 45y - 3y - 9$

$= 15y^2 + 42y - 9$

9. $(2x - 6)^2$

$= (2x - 6)(2x - 6)$

$= 4x^2 - 12x - 12x + 36$

$= 4x^2 - 24x + 36$

10. $(3t - 2)(3t + 2)$

$= 9t^2 + 6t - 6t - 4$

$= 9t^2 - 4$

Lesson 19

1. $x^2 + 7x + 12 = (x + 4)(x + 3)$
2. $x^2 - 9x + 18 = (x - 3)(x - 6)$
3. $x^2 - 4x - 21 = (x - 7)(x + 3)$
4. $x^2 + 8x - 48 = (x + 12)(x - 4)$
5. $x^2 + 12x + 36 = (x + 6)(x + 6) = (x + 6)^2$
6. $x^2 - 81 = (x - 9)(x + 9)$
7. $x^2 - 144 = (x - 12)(x + 12)$
8. $2x^2 + 11x + 5 = (2x + 1)(x + 5)$
9. $6x^2 - 16x + 8 = (3x - 2)(2x - 4)$
10. $2x^2 - 7x - 15 = (2x + 3)(x - 5)$

Lesson 20

1. $x^2 - 4x = x(x - 4)$
2. $3x^2 - 9x = 3x(x - 3)$
3. $6x^2 + 16x = 2x(3x + 8)$
4. $x^2 + 10x + 25 = (x + 5)(x + 5) = (x + 5)^2$
5. $x^2 + 14x + 49 = (x + 7)(x + 7) = (x + 7)^2$
6. $4x^2 - 12x + 9 = (2x - 3)(2x - 3) = (2x - 3)^2$
7. $x^2 - 169 = (x - 13)(x + 13)$
8. $x^2 - 900 = (x - 30)(x + 30)$
9. $16x^2 - 49 = (4x - 7)(4x + 7)$
10. $50x^2 - 72 = 2(25x^2 - 36) = 2(5x - 6)(5x + 6)$

Lesson 21

1. Using the quadratic formula (with $a = 1$, $b = -3$, and $c = 1$), we know

$x = \dfrac{-(-3)+\sqrt{(-3)^2-4(1)(1)}}{2(1)}$ and $x = \dfrac{-(-3)-\sqrt{(-3)^2-4(1)(1)}}{2(1)}$ This is the same as

$x = \dfrac{3+\sqrt{5}}{2}$ and $x = \dfrac{3-\sqrt{5}}{2}$ These are the two solutions.

2. Using the quadratic formula (with $a = 1$, $b = 9$, and $c = 20$), we know

$x = \dfrac{-9+\sqrt{(9)^2-4(1)(20)}}{2(1)}$ and $x = \dfrac{-9-\sqrt{(9)^2-4(1)(20)}}{2(1)}$ This is the same as

$x = \dfrac{-9+\sqrt{1}}{2}$ and $x = \dfrac{-9-\sqrt{1}}{2}$ We can simplify these to $x = -4$ and $x = -5$. These are the two solutions.

3. Using the quadratic formula (with $a = 6$, $b = 16$, and $c = 0$), we know

$x = \dfrac{-16+\sqrt{(16)^2-4(6)(0)}}{2(6)}$ and $x = \dfrac{-16-\sqrt{(16)^2-4(6)(0)}}{2(6)}$ This is the same as

$x = \dfrac{-16+\sqrt{16^2}}{12}$ and $x = \dfrac{-16-\sqrt{16^2}}{12}$ We can simplify these to $x = 0$ and $x = -\dfrac{32}{12}$, which is the same as

$x = 0$ and $x = -\dfrac{8}{3}$. These are the two solutions.

4. Using the quadratic formula (with $a = 1$, $b = -8$, and $c = 16$), we know

$x = \dfrac{-(-8)+\sqrt{(-8)^2-4(1)(16)}}{2(1)}$ and $x = \dfrac{-(-8)-\sqrt{(-8)^2-4(1)(16)}}{2(1)}$ This is the same as

$x = \dfrac{8+\sqrt{0}}{2}$ and $x = \dfrac{8-\sqrt{0}}{2}$ We can simplify these to $x = 4$ and $x = 4$, which is the same as just $x = 4$. So there is really only one solution.

5. Using the quadratic formula (with $a = 5$, $b = 11$, and $c = 2$), we know

$x = \dfrac{-11+\sqrt{(11)^2-4(5)(2)}}{2(5)}$ and $x = \dfrac{-11-\sqrt{(11)^2-4(5)(2)}}{2(5)}$ This is the same as

$x = \dfrac{-11+\sqrt{81}}{10}$ and $x = \dfrac{-11-\sqrt{81}}{10}$ We can simplify these to $x = -\dfrac{2}{10}$ and $x = -\dfrac{20}{10}$, which is the same as

$x = -\dfrac{1}{5}$ and $x = -2$. These are the two solutions.

6. Using the quadratic formula (with $a = 1$, $b = 6$, and $c = 12$), we know

$x = \dfrac{-6+\sqrt{(6)^2-4(1)(12)}}{2(1)}$ and $x = \dfrac{-6-\sqrt{(6)^2-4(1)(12)}}{2(1)}$ This is the same as

$x = \dfrac{-6+\sqrt{-12}}{2}$ and $x = \dfrac{-6-\sqrt{-12}}{2}$ Because the numbers under the square root symbol are negative, we know that there are no real number solutions to the original equation.

7. We begin by noting that the original equation is equivalent to $x^2 - 5x - 8 = 0$. Using the quadratic formula (with $a = 1$, $b = -5$, and $c = -8$), we know

$x = \dfrac{-(-5) + \sqrt{(-5)^2 - 4(1)(-8)}}{2(1)}$ and $x = \dfrac{-(-5) - \sqrt{(-5)^2 - 4(1)(-8)}}{2(1)}$ This is the same as

$x = \dfrac{5 + \sqrt{57}}{2}$ and $x = \dfrac{5 - \sqrt{57}}{2}$ These are the two solutions.

8. We begin by noting that the original equation is equivalent to $2x^2 - 3x + 6 = 0$. Using the quadratic formula (with $a = 2$, $b = -3$, and $c = 6$), we know

$x = \dfrac{-(-3) + \sqrt{(-3)^2 - 4(2)(6)}}{2(2)}$ and $x = \dfrac{-(-3) - \sqrt{(-3)^2 - 4(2)(6)}}{2(2)}$ This is the same as

$x = \dfrac{3 + \sqrt{-39}}{4}$ and $x = \dfrac{3 - \sqrt{-39}}{4}$ Because the numbers under the square root symbol are negative, we know that there are no real number solutions to the original equation.

9. Using the quadratic formula (with $a = -1$, $b = -4$, and $c = 7$), we know

$x = \dfrac{-(-4) + \sqrt{(-4)^2 - 4(-1)(7)}}{2(-1)}$ and $x = \dfrac{-(-4) - \sqrt{(-4)^2 - 4(-1)(7)}}{2(-1)}$ This is the same as

$x = \dfrac{4 + \sqrt{44}}{-2}$ and $x = \dfrac{4 - \sqrt{44}}{-2}$ We can simplify these to $x = \dfrac{4 + 2\sqrt{11}}{-2}$ and $x = \dfrac{4 - 2\sqrt{11}}{-2}$, which is the same as $x = -2 - \sqrt{11}$ and $x = -2 + \sqrt{11}$. These are the two solutions.

10. Using the quadratic formula (with $a = -1$, $b = 6$, and $c = -9$), we know

$x = \dfrac{-6 + \sqrt{(6)^2 - 4(-1)(-9)}}{2(-1)}$ and $x = \dfrac{-6 - \sqrt{(6)^2 - 4(-1)(-9)}}{2(-1)}$ This is the same as

$x = \dfrac{-6 + \sqrt{0}}{-2}$ and $x = \dfrac{-6 - \sqrt{0}}{-2}$ We can simplify these to $x = 3$ and $x = 3$, which is the same as just $x = 3$. So there is really only one solution.

Lesson 22

1. We rewrite the quadratic using the method of completing the square.
   $f(x) = x^2 + 8x + 21 = x^2 + 8x + 16 - 16 + 21 = (x+4)^2 + 5$. Since $(x+4)^2 \geq 0$ for any value of x, we know that $f(x) \geq 5$. So the smallest value of the original quadratic is 5.
2. We rewrite the quadratic using the method of completing the square.
   $f(x) = x^2 + 10x + 13 = x^2 + 10x + 25 - 25 + 13 = (x+5)^2 - 12$. Since $(x+5)^2 \geq 0$ for any value of x, we know that $f(x) \geq -12$. So the smallest value of the original quadratic is -12.
3. $x^2 + 2x - 7 = 0$
   $x^2 + 2x + 1 - 1 - 7 = 0$
   $(x^2 + 2x + 1) - 8 = 0$
   $(x+1)^2 - 8 = 0$
   $(x+1)^2 = 8$
   $x + 1 = \sqrt{8}$ or $x + 1 = -\sqrt{8}$
   $x = -1 + \sqrt{8}$ or $x = -1 - \sqrt{8}$
4. $x^2 + 12x + 32 = 0$
   $x^2 + 12x + 36 - 36 + 32 = 0$
   $(x^2 + 12x + 36) - 4 = 0$
   $(x+6)^2 - 4 = 0$
   $(x+6)^2 = 4$
   $x + 6 = 2$ or $x + 6 = -2$
   $x = -4$ or $x = -8$
5. $x^2 + 16x + 61 = 0$
   $x^2 + 16x + 64 - 64 + 61 = 0$
   $(x^2 + 16x + 64) - 3 = 0$
   $(x+8)^2 - 3 = 0$
   $(x+8)^2 = 3$
   $x + 8 = \sqrt{3}$ or $x + 8 = -\sqrt{3}$
   $x = -8 + \sqrt{3}$ or $x = -8 - \sqrt{3}$

6. $x^2+7x-1=0$

$x^2+7x+\frac{49}{4}-\frac{49}{4}-1=0$

$(x^2+7x+\frac{49}{4})-\frac{53}{4}=0$

$(x+\frac{7}{2})^2-\frac{53}{4}=0$

$(x+\frac{7}{2})^2=\frac{53}{4}$

$x+\frac{7}{2}=\frac{\sqrt{53}}{2}$ or $x+\frac{7}{2}=-\frac{\sqrt{53}}{2}$

$x=-\frac{7}{2}+\frac{\sqrt{53}}{2}$ or $x=-\frac{7}{2}-\frac{\sqrt{53}}{2}$

7. First we factor out a 5 from the left-hand side of the equation.

$5x^2+30x+25=0$

$5(x^2+6x+5)=0$

Dividing both sides by 5 gives $x^2+6x+5=0$. Now we rewrite the left-hand side using the method of completing the square.

$x^2+6x+5=0$

$x^2+6x+9-9+5=0$

$(x^2+6x+9)-4=0$

$(x+3)^2-4=0$

$(x+3)^2=4$

$x+3=2$ or $x+3=-2$

$x=-1$ or $x=-5$

8. First we factor out a − 1 from the left-hand side to get $x^2-8x-13=0$. Now we use completing the square on this new equation.

$x^2-8x-13=0$

$x^2-8x+16-16-13=0$

$(x^2-8x+16)-29=0$

$(x-4)^2-29=0$

$(x-4)^2=29$

$x-4=\sqrt{29}$ or $x-4=-\sqrt{29}$

$x=4+\sqrt{29}$ or $x=4-\sqrt{29}$

9. $x^2+4x+9=0$

$x^2+4x+4-4+9=0$

$(x+2)^2-4+9=0$

$(x+2)^2+5=0$

$(x+2)^2=-5$

This equation has no solutions (the right-hand side is negative, but the left-hand side can never be negative). Therefore, the original equation has no solutions.

10. We first factor out a 2 and obtain the equation $x^2+10x+29=0$. Now we complete the square.

$x^2+10x+29=0$

$x^2+10x+25-25+29=0$

$(x^2+10x+25)+4=0$

$(x+5)^2+4=0$

$(x+5)^2=-4$

This equation has no solutions (the right-hand side is negative, but the left-hand side can never be negative). Therefore, the original equation has no solutions.

Lesson 23

1. Notice that the graph of this quadratic equation will be a parabola that opens upward, since the coefficient of the x^2 term is positive. Also, the y-intercept of this graph is (0, 7) since $0^2 + 8(0) + 7 = 7$. Next we see that we can factor $x^2 + 8x + 7$ as $(x + 7)(x + 1)$. So the two x-intercepts occur at (−7, 0) and (−1, 0). Last, we complete the square of the original quadratic to find the vertex of the parabola.

$x^2 + 8x + 7$

$x^2 + 8x + 16 - 16 + 7$

$(x + 4)^2 - 9$

So the vertex of this parabola occurs at (−4, −9). Combining all this information, we can sketch the graph of the parabola.

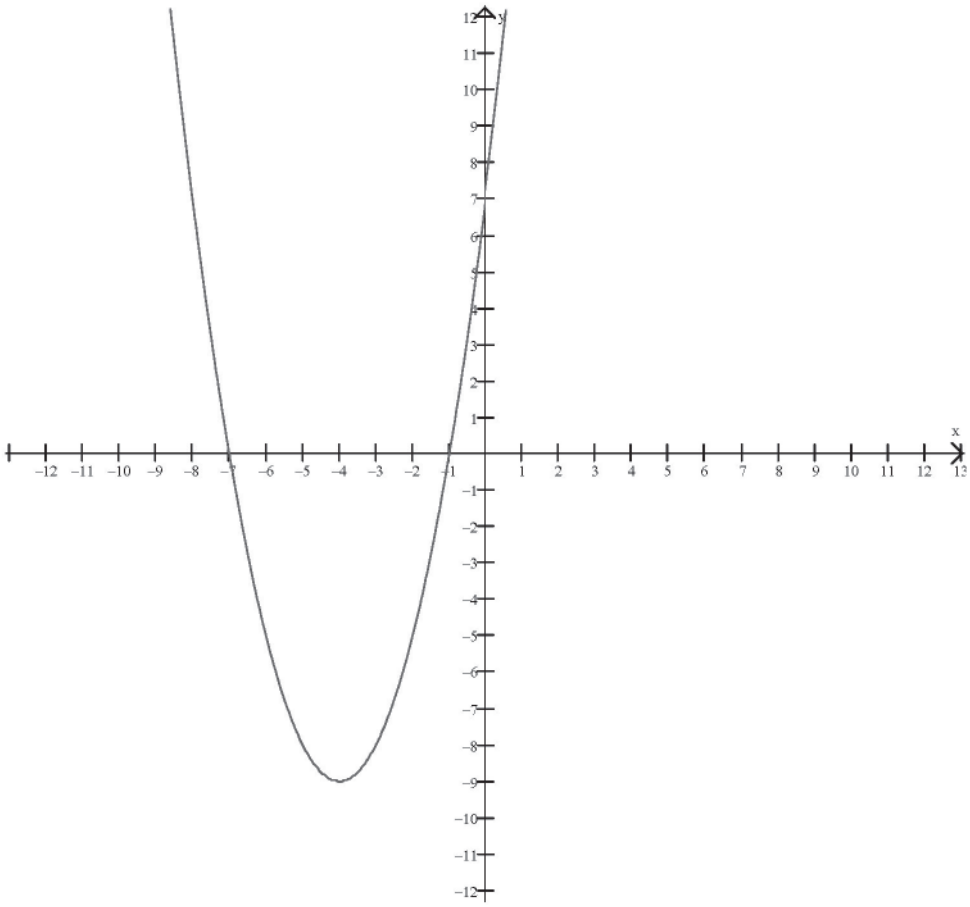

2. Notice that the graph of this quadratic equation will be a parabola that opens upward, since the coefficient of the x^2 term is positive. Also, the y-intercept of this graph is (0, 9) since $0^2 - 4(0) + 9 = 9$.

Next it appears that factoring this quadratic will be difficult, so we skip this step for now.

Last, we complete the square of the original quadratic to find the vertex of the parabola.

$x^2 - 4x + 9$

$x^2 - 4x + 4 - 4 + 9$

$(x-2)^2 + 5$

So the vertex of this parabola occurs at (2, 5). Combining all this information, we can sketch the graph of the parabola.

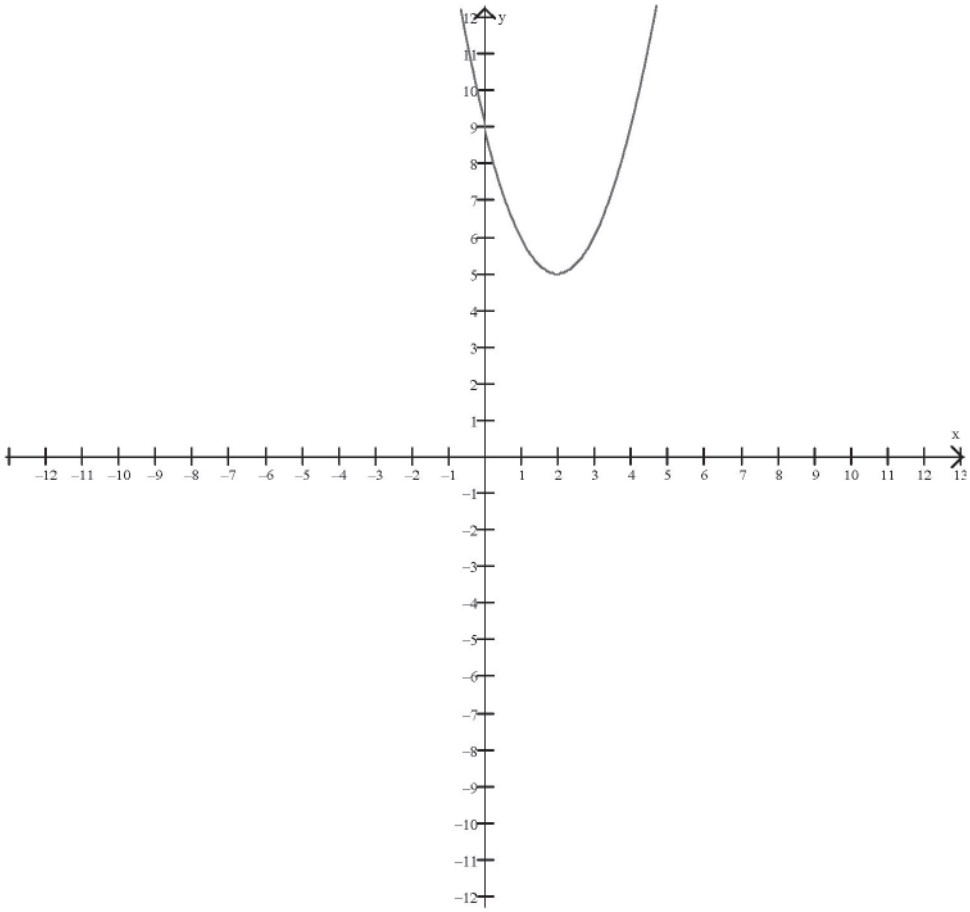

Solutions

3. Notice that the graph of this quadratic equation will be a parabola that opens downward, since the coefficient of the x^2 term is negative. Also, the y-intercept of this graph is $(0, -9)$ since $-0^2 + 6(0) - 9 = -9$.

Next we factor the quadratic (if possible) to determine the x-intercepts.

$-x^2 + 6x - 9$

$-(x^2 - 6x + 9)$

$-(x-3)(x-3)$

$-(x-3)^2$

So there is only one x-intercept and it is at the point $(3, 0)$.

Last, we complete the square of the original quadratic to find the vertex of the parabola. But we already did this when we factored the expression.

$-x^2 + 6x - 9$

$-(x^2 - 6x + 9)$

$-(x-3)(x-3)$

$-(x-3)^2$

$-(x-3)^2 + 0$

So the vertex of this parabola occurs at $(3, 0)$. Combining all this information, we can sketch the graph of the parabola.

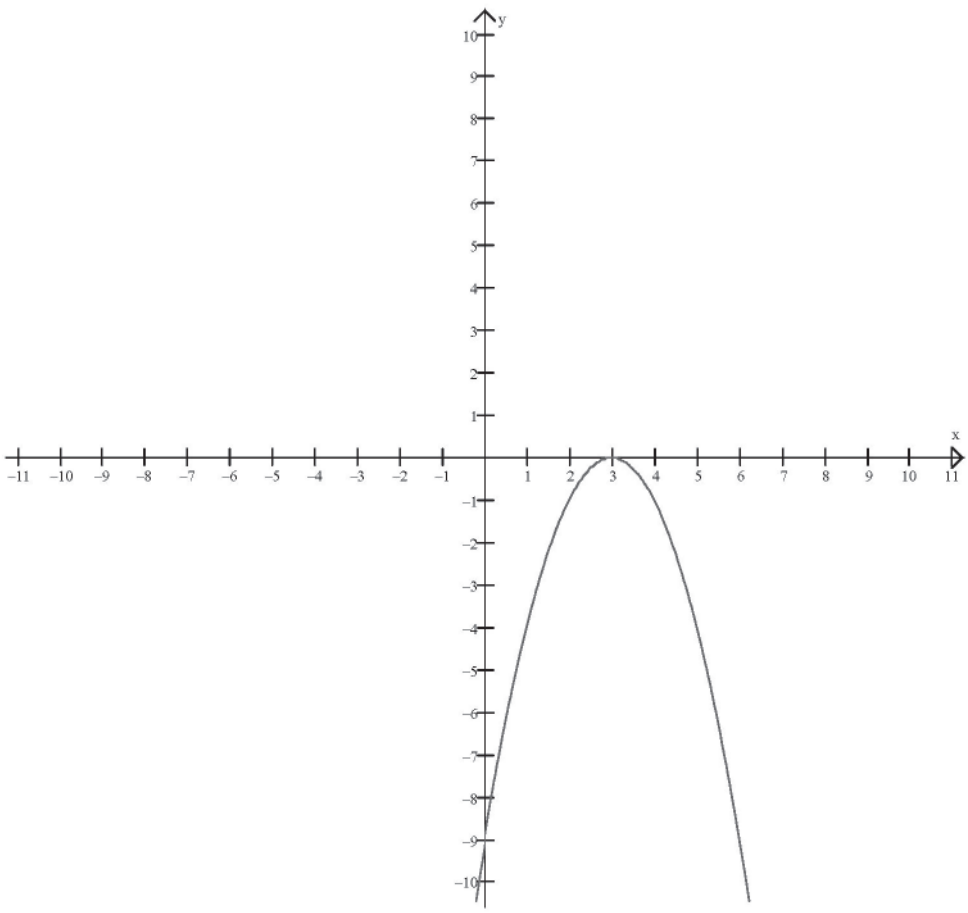

4. This quadratic is already written in factored form. This is extremely helpful! First we know that the parabola will open upward (because the expanded version of this quadratic is x^2+2x+1 and the coefficient of the x^2 term there is positive). Next we know the y-intercept is (0, 1), since $(0+1)^2=1$. We also see very quickly that the x-intercept is at (−1, 0), since $(x+1)^2=(x+1)(x+1)$. Last, the original equation could be written as $y=(x+1)^2+0$, so the vertex is (−1, 0). Since the vertex is the same as the x-intercept, we know the parabola "sits on" the x-axis. Combining all this information, we can sketch the graph of the parabola.

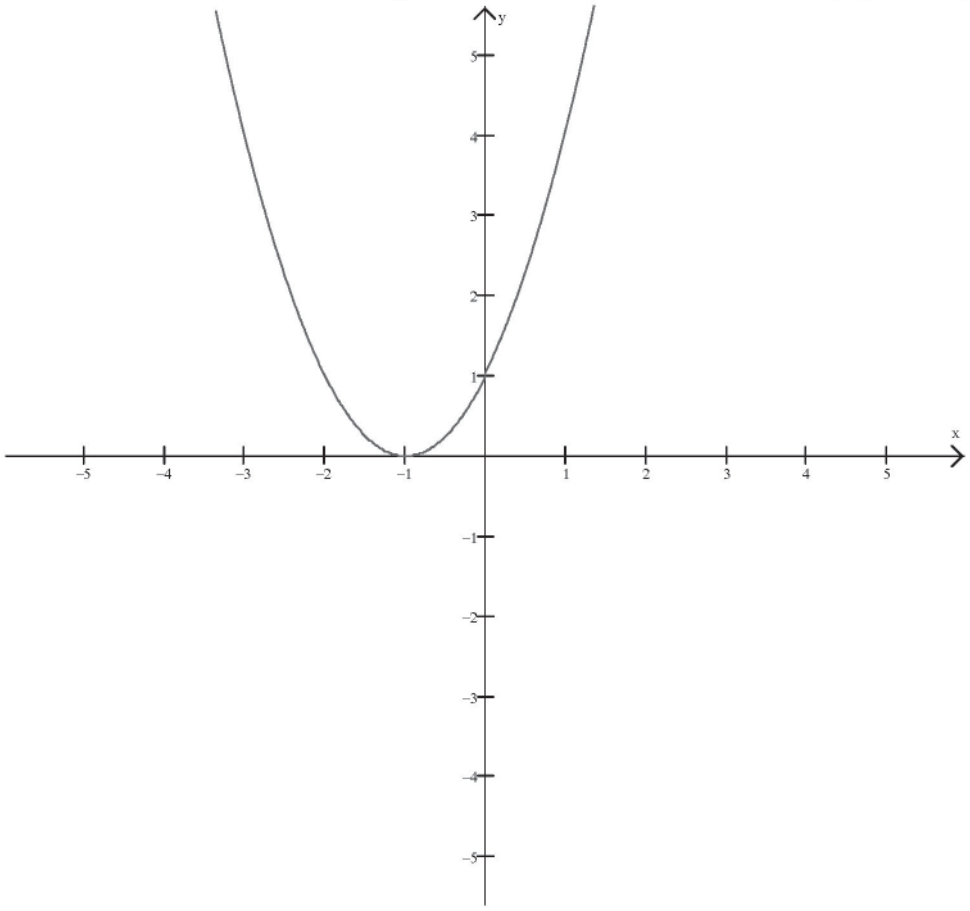

5. This quadratic is already written in a form that allows us to determine the vertex very quickly. The vertex is at (−3, −4). It is also clear from this form of the equation that the parabola will open downward. Since the vertex is in Quadrant III and the parabola opens downward, we know that there are no x-intercepts. Last, the y-intercept occurs at (0, −13) because $-(0+3)^2 - 4 = -9 - 4 = -13$. Combining all this information, we can sketch the graph of the parabola.

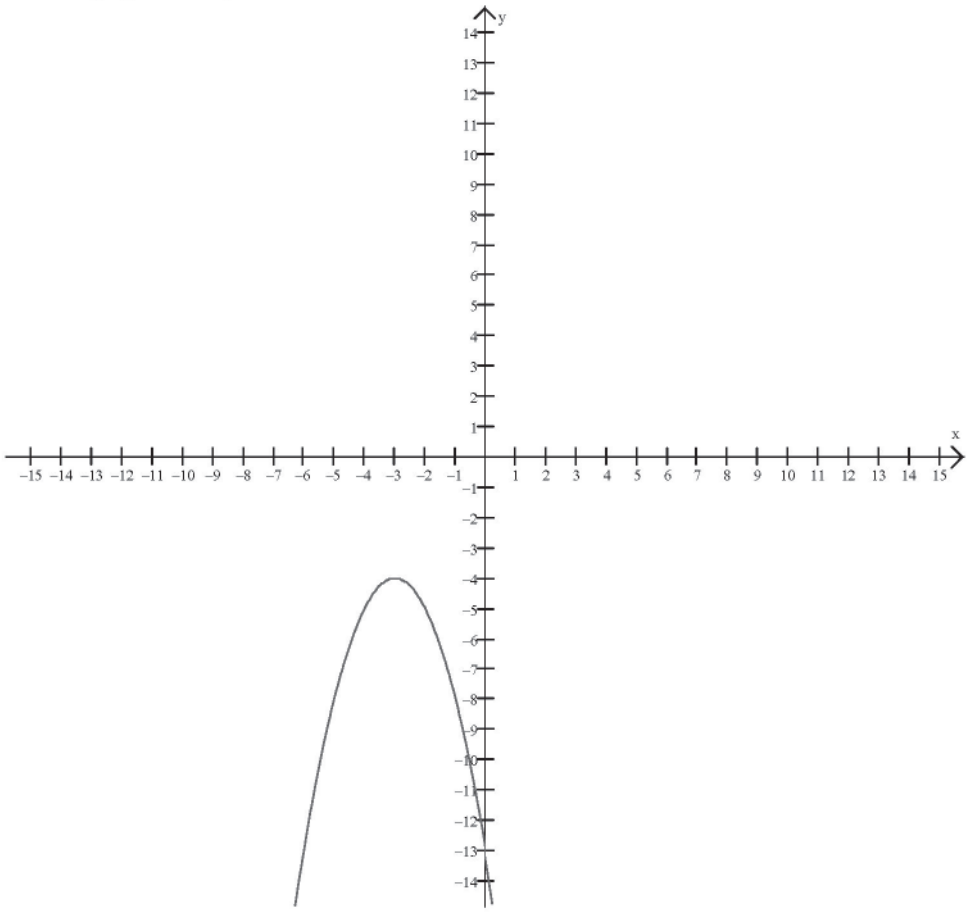

6. We know the parabola will open downward. We also know that the y-intercept occurs at (0, 0), since $-(0)^2 + 3(0) = 0$. Also, the x-intercepts occur at (0, 0) and (3, 0) because we can factor the equation as follows.

$-x^2 + 3x$

$-(x^2 - 3x)$

$-x(x - 3)$

Last, we complete the square to find the vertex of the parabola.

$-x^2 + 3x$

$-(x^2 - 3x)$

$-(x^2 - 3x + \frac{9}{4}) + \frac{9}{4}$

$-(x - \frac{3}{2}) + \frac{9}{4}$

So the vertex is at $\left(\frac{3}{2}, \frac{9}{4}\right)$. Combining all this information, we can sketch the graph of the parabola.

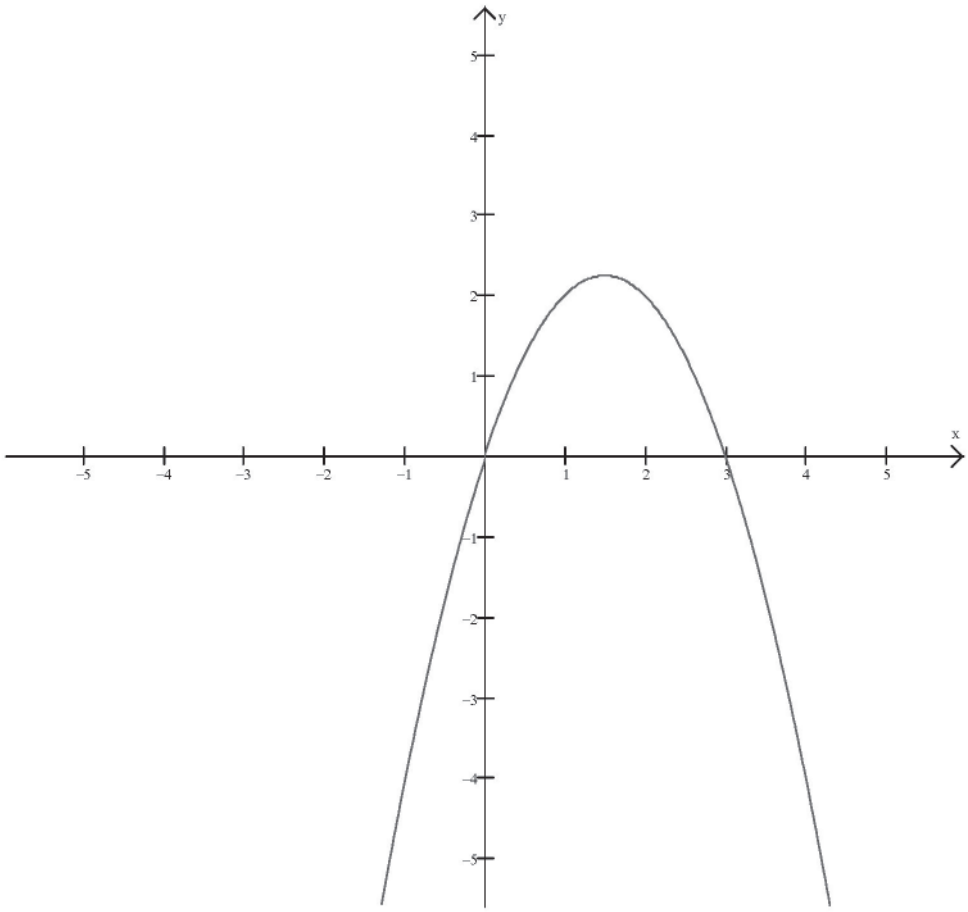

7. The parabola opens upward. The y-intercept occurs at (0, −4), since $0^2 - 4 = -4$. The x-intercepts occur at (2, 0) and (−2, 0), since $x^2 - 4 = (x-2)(x+2)$.

Last, this equation can be rewritten as $y = (x-0)^2 - 4$. Therefore, the vertex of the parabola occurs at (0, −4) (which is also the y-intercept). Combining all this information, we can sketch the graph of the parabola.

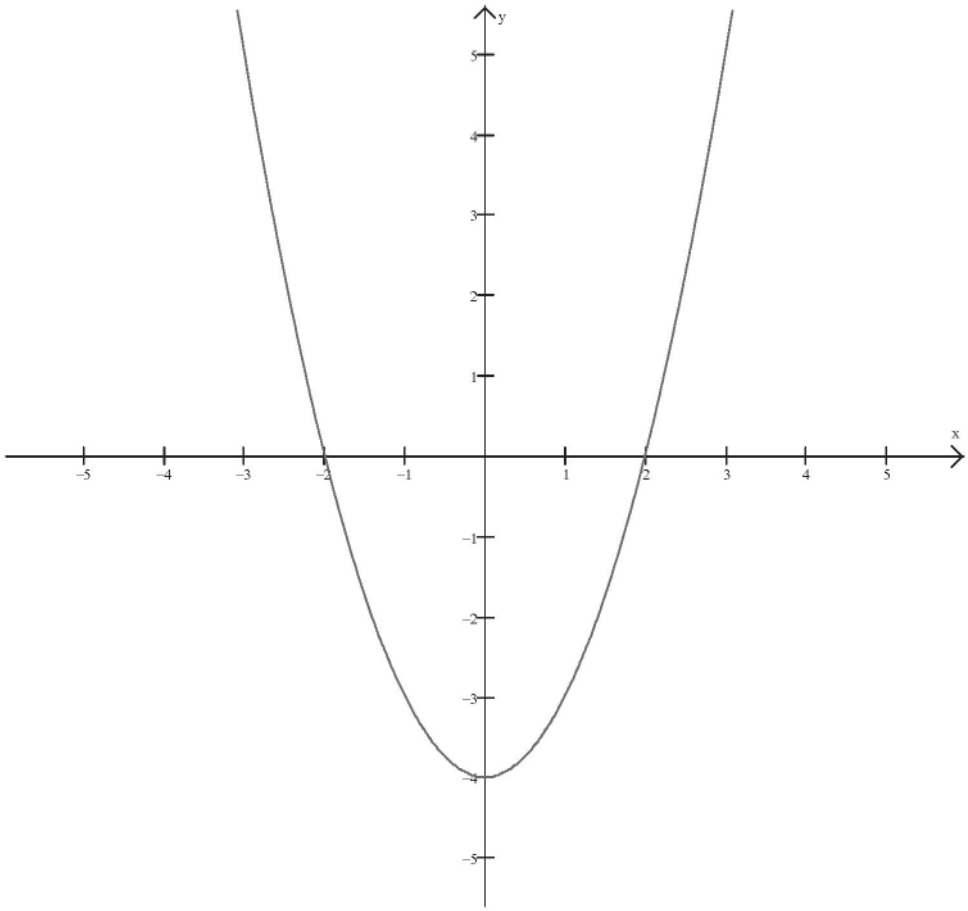

8. The parabola opens downward. The y-intercept occurs at (0, −2), since $-0^2 - 2 = -2$. Notice that the equation can be rewritten as $y = -(x-0)^2 - 2$. So the vertex of the parabola occurs at (0, −2) (which is also the y-intercept). Since the vertex is below the x-axis and the parabola opens downward, we know that there are no x-intercepts. Combining all this information, we can sketch the graph of the parabola.

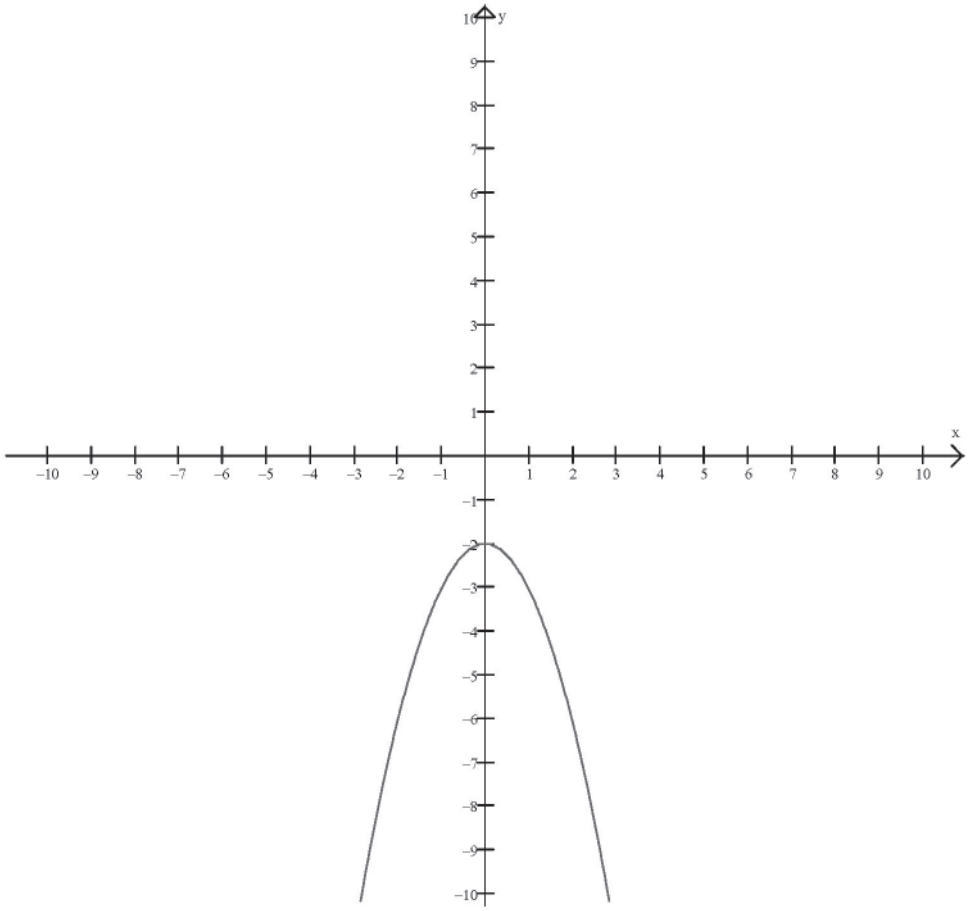

9. It is relatively easy to see that the x-intercepts of the parabola, in its current form, are (3, 0) and (5, 0). Also, we see that the parabola opens upward, since $(x-3)(x-5) = x^2 - 8x + 15$. This also tells us that the y-intercept is (0, 15), since $0^2 - 8(0) + 15 = 15$. Last, we need the vertex of the parabola.

$x^2 - 8x + 15$

$x^2 - 8x + 16 - 16 + 15$

$(x-4)^2 - 1$

So the vertex of the parabola occurs at (4, −1). Combining all this information, we can sketch the graph of the parabola.

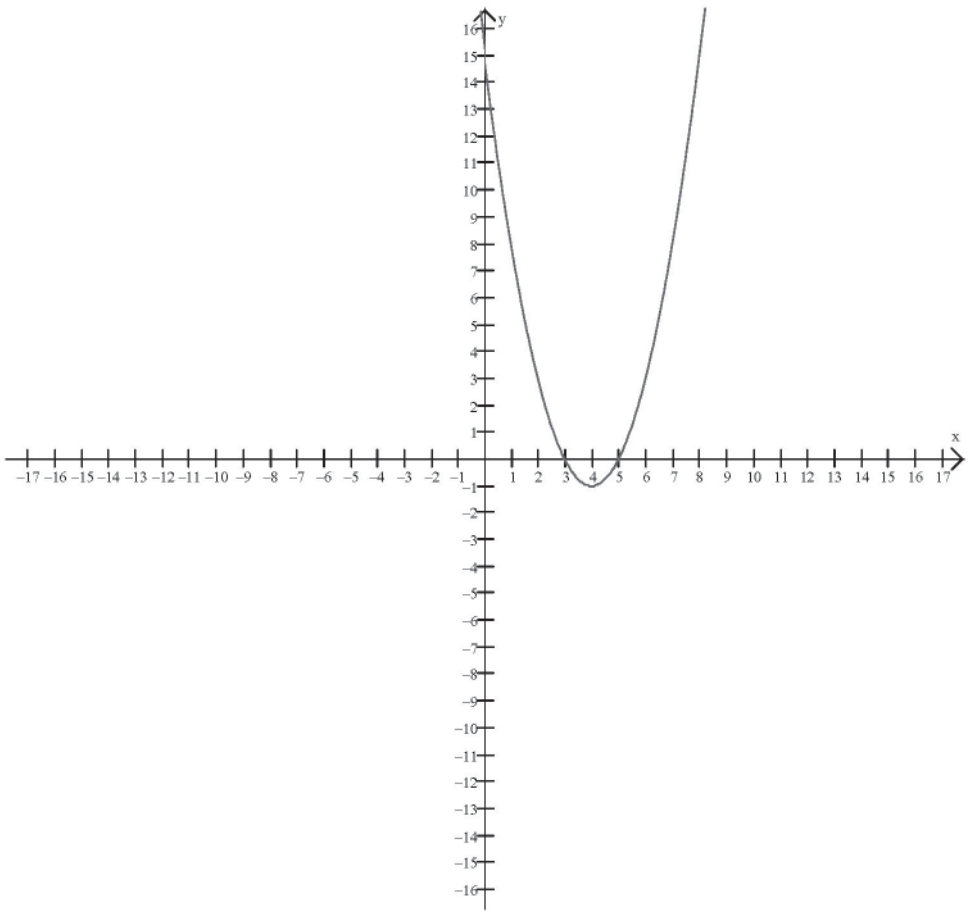

10. It is relatively easy to see that the x-intercepts of the parabola, in its current form, are (1, 0) and (−2, 0). Also, we see that the parabola opens downward, since $-(x-1)(x+2) = -x^2 - x + 2$. This also tells us that the y-intercept is (0, 2), since $-0^2 - 1(0) + 2 = 2$. Last, we need the vertex of the parabola.

$$-x^2 - x + 2$$

$$-(x^2 + x) + 2$$

$$-(x^2 + x + \frac{1}{4}) + 2 + \frac{1}{4}$$

$$-(x + \frac{1}{2}) + \frac{9}{4}$$

So the vertex of the parabola occurs at (−1/2, 9/4). Combining all this information, we can sketch the graph of the parabola.

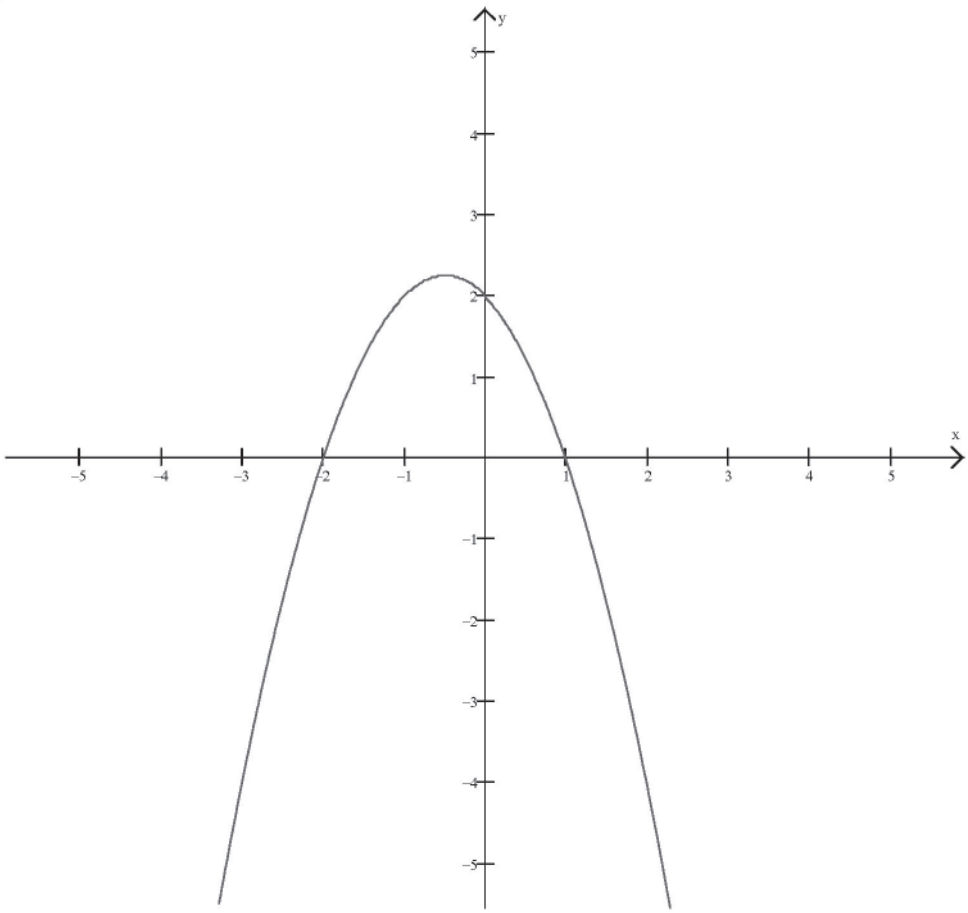

Solutions

Lesson 24

1. Write down a quadratic equation that gives the volume of the box.

   Let x = the length of the box. Then $x - 4$ = the width of the box. Let V = the volume of the box. Since the volume of such a box is given by V = length × width × height, we have

   $V = x(x - 4)(10)$ or $V = 10x(x - 4)$.

2. In this case, $x = 12$, so we have

   $V = 10x(x - 4)$

   $V = 10(12)(12 - 4)$

   $V = 10(12)(8)$

   $V = 960 \text{ in}^3$

3. First we must change "half a foot" to six inches so that the units match up in the problem. Next, if the width is 6 inches, then the length is 10 inches. So $x = 10$ here.

   Then the volume is given by

   $V = 10(10)(10 - 4)$

   $V = 10(10)(6)$

   $V = 600 \text{ in}^3$

4. $V = 10x(x - 4)$

   $450 = 10x(x - 4)$

   $45 = x(x - 4)$

   $x(x - 4) - 45 = 0$

   $x^2 - 4x - 45 = 0$

   $(x - 9)(x + 5) = 0$

   So $x = 9$ or $x = -5$. Of course, $x = -5$ does not make sense (since x is the length of the box). So the answer must be $x = 9$. Therefore, the dimensions of the box are length 9 inches, width 5 inches, and height 10 inches.

5. Using this formula (and approximating π by the number 3.14), determine the volume of a cylinder with $r = 8$ cm and $h = 6$ cm.

   $V = 6\pi r^2$

   $V = 6(3.14)(8)^2$

   $V = 1{,}205.76 \text{ cm}^3$

6. $V = 6\pi r^2$

   $7{,}536 = 6\pi r^2$

   $1{,}256 = \pi r^2$

   $400 = r^2$

   $r = 20$ or $r = -20$

   The value $r = -20$ does not make sense, as the radius of the cylinder must be positive. So the final answer is $r = 20$ cm; the radius must be 20 cm in length.

Lesson 25

1. Yes, these three numbers are the leg lengths of a right triangle because they satisfy the Pythagorean Theorem.

   $8^2 + 15^2 = 17^2$

   $64 + 225 = 289$

   $289 = 289$

   True

2. No, these three numbers are not the leg lengths of a right triangle because they do not satisfy the Pythagorean Theorem.

   $7^2 + 12^2 = 15^2$

   $49 + 144 = 225$

   $193 = 225$

   False

3. Yes, these three numbers are the leg lengths of a right triangle because they satisfy the Pythagorean Theorem.

   $9^2 + 40^2 = 41^2$

   $81 + 1{,}600 = 1{,}681$

   $1{,}681 = 1{,}681$

   True

4. No, these three numbers are not the leg lengths of a right triangle because they do not satisfy the Pythagorean Theorem.

   $45^2 + 55^2 = 65^2$

   $2{,}025 + 3{,}025 = 4{,}225$

   $5{,}050 = 4{,}225$

   False

5. We use the Pythagorean Theorem.

   $15^2 + b^2 = 39^2$

   $225 + b^2 = 1521$

   $b^2 = 1521 - 225$

   $b^2 = 1296$

   $b = 36$

6. We use the Pythagorean Theorem.

   $a^2 + 63^2 = 65^2$

   $a^2 + 3969 = 4225$

   $a^2 = 4225 - 3969$

   $a^2 = 256$

   $a = 16$

7. We use the Pythagorean Theorem.

$10^2 + b^2 = 15^2$

$100 + b^2 = 225$

$b^2 = 125$

$b = \sqrt{125}$

$b = \sqrt{25}\sqrt{5}$

$b = 5\sqrt{5}$

8. We use the Pythagorean Theorem.

$4^2 + 10^2 = c^2$

$16 + 100 = c^2$

$c^2 = 116$

$c = \sqrt{116}$

$c = \sqrt{29}\sqrt{4}$

$c = 2\sqrt{29}$

9. Let a equal the length of the shorter leg, so that $a + 1$ is the length of the other leg. Then we must solve the equation.

$a^2 + (a+1)^2 = 11^2$

$a^2 + a^2 + 2a + 1 = 121$

$2a^2 + 2a - 120 = 0$

$a^2 + a - 60 = 0$

By the quadratic formula, the solutions of this equation are

$\frac{-1+\sqrt{1-4(1)(-60)}}{2}$ and $\frac{-1-\sqrt{1-4(1)(-60)}}{2}$ These can be simplified to $\frac{-1+\sqrt{241}}{2}$ and $\frac{-1-\sqrt{241}}{2}$

Unfortunately, 241 is not a perfect square, so these two solutions are not going to be whole numbers. Therefore, there is no such right triangle.

10. Let a equal the length of the shorter leg, so that $a + 3$ is the length of the other leg. Then we must solve the equation.

$$a^2 + (a+3)^2 = 87^2$$

$$a^2 + a^2 + 6a + 9 = 7569$$

$$2a^2 + 6a - 7560 = 0$$

$$a^2 + 3a - 3780 = 0$$

By the quadratic formula, the solutions of this equation are

$\frac{-3+\sqrt{3^2-4(1)(-3780)}}{2}$ and $\frac{-3-\sqrt{3^2-4(1)(-3780)}}{2}$ These can be simplified to $\frac{-3+\sqrt{15129}}{2}$ and $\frac{-3-\sqrt{15129}}{2}$ Using a calculator, we see that $\sqrt{15129} = 123$, so that our two solutions are $\frac{-3+123}{2}$ and $\frac{-3-123}{2}$, which are the same as 60 and −63. Since these are to be the lengths of a leg of a triangle, we know that −63 cannot be the value of a. So we must have $a = 60$. Then the length of the other leg is $60 + 3 = 63$, since the length of that other leg is $a + 3$. Therefore, there is such a right triangle, and its lengths are 60, 63, and 87. (This can be checked with the Pythagorean Theorem.)

Lesson 26

1. This is a polynomial, since all the powers of x are positive integers. The degree is 6 and the leading coefficient is 5.
2. This is a polynomial, since all the powers of x are positive integers. The degree is 5 and the leading coefficient is $\sqrt{13}$.
3. This is not a polynomial because one of the powers of x is a negative integer.
4. This is not a polynomial because one of the powers of x is a fraction. (Remember: $\sqrt{x} = x^{1/2}$.)
5. This is a polynomial since all the powers of x are positive integers. The degree is 9 and the leading coefficient is −18.
6. This is not a polynomial; it is a ratio of polynomials, but this particular example is not a polynomial.

   State how the ends of the graphs of each polynomial appear in the graph. (Do they both go up? Both go down? One up and one down?)
7. Since the degree of the polynomial is even, and since the leading coefficient is positive, the ends of the graph both go up. To confirm this, here is a sketch of the graph.

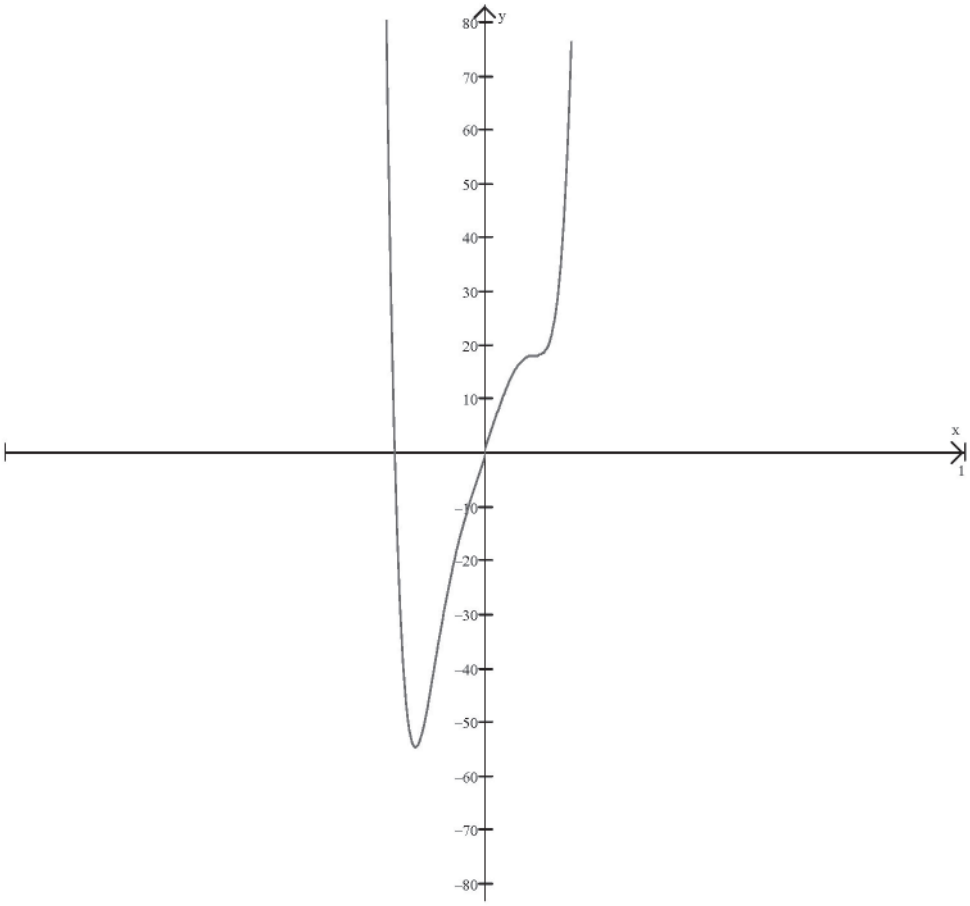

8. Since the degree of the polynomial is odd, and since the leading coefficient is positive, the end on the left side of the graph goes down while the end on the right side of the graph goes up. To confirm this, here is a sketch of the graph.

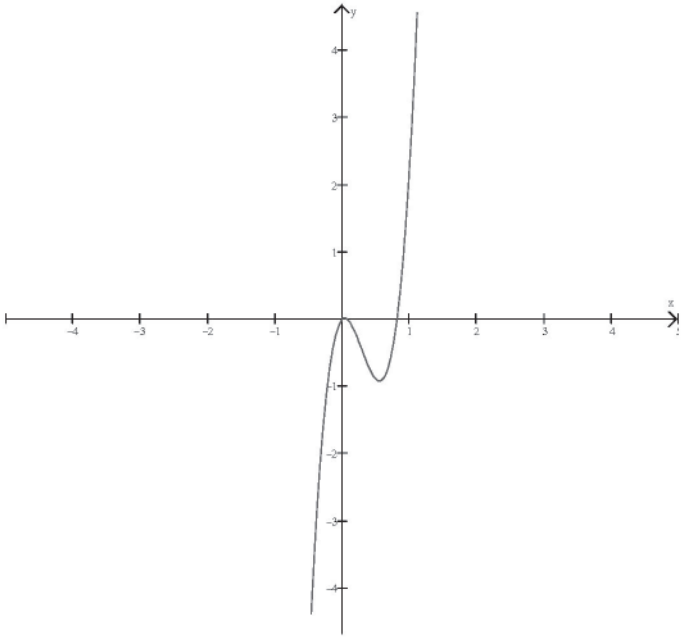

9. Since the degree of the polynomial is even, and since the leading coefficient is negative, the ends of the graph both go down. To confirm this, here is a sketch of the graph.

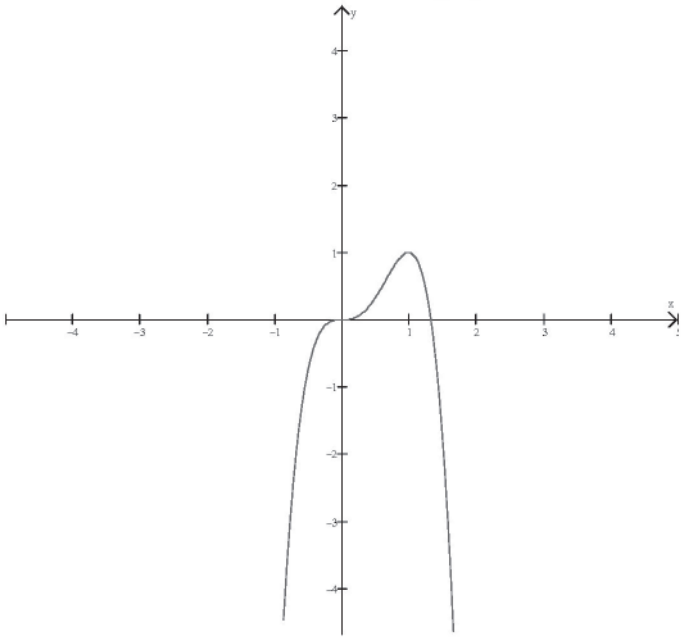

10. Since the degree of the polynomial is odd, and since the leading coefficient is negative, the end on the left side of the graph goes up while the end on the right side of the graph goes down. To confirm this, here is a sketch of the graph.

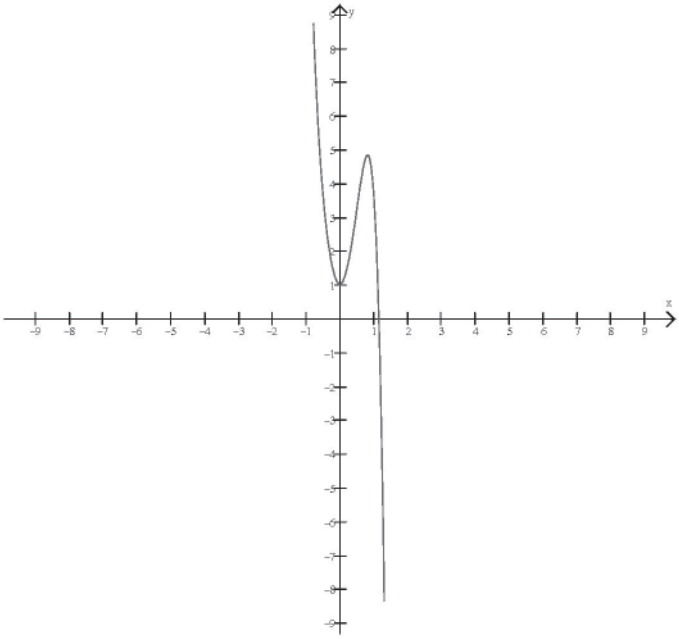

Lesson 27

1. $(5x^6 - 14x^4 + 27x) + (4x^6 + x^5 + 3x^4 + 9) = 9x^6 + x^5 - 11x^4 + 27x + 9$

2. $(2x^3 - 10x^2 + 7x - 4) + (5x^3 + 3x^2 - 19x - 10) = 7x^3 - 7x^2 - 12x - 14$

3. $(2x^4 + 7x - 14) - (5x^3 - 13x - 15) = 2x^4 - 5x^3 + 20x + 1$

4. $(2x^5 + x^3 - 8x) - (-2x^5 - 9x^3 + 7x) = 4x^5 + 10x^3 - 15x$

5. $7x(4x^6 - x^5 + 3x^4 - 5) = 28x^7 - 7x^6 + 21x^5 - 35x$

6. $(5x^2 - 4x)(x + 1) = 5x^3 + 5x^2 - 4x^2 - 4x = 5x^3 + x^2 - 4x$

7. $(3x^4 - 7x^2)(2x^3 + 5x) = 6x^7 + 15x^5 - 14x^5 - 35x^3 = 6x^7 + x^5 - 35x^3$

8. $(x^4 - x^2 + 3)(4x^3 + 2x^2 + 5)$

$= 4x^7 + 2x^6 + 5x^4 - 4x^5 - 2x^4 - 5x^2 + 12x^3 + 6x^2 + 15$

$= 4x^7 + 2x^6 - 4x^5 + 3x^4 + 12x^3 + x^2 + 15$

9.
$$\begin{array}{r|l} & \quad\;\; 2x + 5 \\ \hline x - 3 & 2x^2 - x - 15 \\ & 2x^2 - 6x \\ \hline & 5x - 15 \\ & 5x - 15 \\ \hline & 0 \end{array}$$

So $(2x^2 - x - 15) \div (x - 3) = 2x + 5$ with remainder $= 0$.

10.
$$\begin{array}{r|l} & \quad\;\; 5x - 7 \\ \hline x + 2 & 5x^2 + 3x - 1 \\ & 5x^2 + 10x \\ \hline & -7x - 1 \\ & -7x - 14 \\ \hline & 13 \end{array}$$

So $(5x^2 + 3x - 1) \div (x + 2) = 5x - 7$ with remainder $= 13$.

Lesson 28

1. $\dfrac{x(x+1)(x-3)(x-4)}{(x+1)(x+2)(x+3)} = \dfrac{x(x-3)(x-4)}{(x+2)(x+3)}$

2. $\dfrac{5x+20}{3x+12} = \dfrac{5(x+4)}{3(x+4)} = \dfrac{5}{3}$

3. $\dfrac{6x-18}{x^2-9} = \dfrac{6(x-3)}{(x+3)(x-3)} = \dfrac{6}{x+3}$

4. $\dfrac{x^2+8x-20}{x^2-9x+14} = \dfrac{(x+10)(x-2)}{(x-7)(x-2)} = \dfrac{x+10}{x-7}$

5. $\dfrac{x^3+6x}{3x} = \dfrac{x(x^2+6)}{3x} = \dfrac{x^2+6}{3}$

6. $\dfrac{x^2}{x^2+4x} = \dfrac{x^2}{x(x+4)} = \dfrac{x}{x+4}$

7. $\dfrac{6x^2}{4x+1} + \dfrac{3x^2}{4x+1} = \dfrac{9x^2}{4x+1}$

8. $\dfrac{3x-7}{5x-2} - \dfrac{2x+4}{5x-2} = \dfrac{3x-7-2x-4}{5x-2} = \dfrac{x-11}{5x-2}$

9. $\dfrac{3x}{x+1} + \dfrac{5x}{x-2} = \dfrac{3x(x-2)}{(x+1)(x-2)} + \dfrac{5x(x+1)}{(x+1)(x-2)}$

$= \dfrac{3x^2-6x}{(x+1)(x-2)} + \dfrac{5x^2+5x}{(x+1)(x-2)}$

$= \dfrac{8x^2-x}{(x+1)(x-2)}$

$= \dfrac{x(8x-1)}{(x+1)(x-2)}$

10. $\dfrac{3}{x-1} + \dfrac{5}{2x-1}$

$= \dfrac{3(2x-1)}{(x-1)(2x-1)} + \dfrac{5(x-1)}{(x-1)(2x-1)}$

$= \dfrac{6x-3}{(x-1)(2x-1)} + \dfrac{5x-5}{(x-1)(2x-1)}$

$= \dfrac{11x-8}{(x-1)(2x-1)}$

Lesson 29

1. $\frac{12x^2}{25}\cdot\frac{5}{21x^6}=\frac{4}{35x^4}$

2. $\frac{4x+1}{20x+40}\cdot\frac{3x+6}{16x^2-1}=\frac{4x+1}{20(x+2)}\cdot\frac{3(x+2)}{(4x+1)(4x-1)}=\frac{3}{20(4x-1)}$

3. $\frac{x^2-4}{x^2+4x+4}\cdot\frac{x^2-x-6}{x^2-9}=\frac{(x-2)(x+2)}{(x+2)(x+2)}\cdot\frac{(x-3)(x+2)}{(x-3)(x+3)}=\frac{x-2}{x+3}$

4. $\frac{5x+2}{6x+4}\cdot(9x^2-4)=\frac{5x+2}{6x+4}\cdot\frac{9x^2-4}{1}=\frac{5x+2}{2(3x+2)}\cdot\frac{(3x+2)(3x-2)}{1}=\frac{(5x+2)(3x-2)}{2}$

5. $\frac{x^2-9x+18}{10x-30}\cdot\frac{2}{x^2-36}=\frac{(x-3)(x-6)}{10(x-3)}\cdot\frac{2}{(x-6)(x+6)}=\frac{1}{5(x+6)}$

6. $\frac{x^2+x-20}{2x-10}\div\frac{1}{x^2-25}=\frac{x^2+x-20}{2x-10}\cdot\frac{x^2-25}{1}=\frac{(x+5)(x-4)}{2(x-5)}\cdot\frac{(x-5)(x+5)}{1}=\frac{(x+5)^2(x-4)}{2}$

7. $\frac{x^2+5x-24}{x-3}\div\frac{x^2+16x+64}{x-4}=\frac{x^2+5x-24}{x-3}\cdot\frac{x-4}{x^2+16x+64}=\frac{(x+8)(x-3)}{x-3}\cdot\frac{x-4}{(x+8)(x+8)}=\frac{x-4}{x+8}$

8. $\frac{x^2+9x+20}{x-1}\div(x+5)=\frac{x^2+9x+20}{x-1}\cdot\frac{1}{x+5}=\frac{(x+4)(x+5)}{x-1}\cdot\frac{1}{x+5}=\frac{x+4}{x-1}$

9. $\frac{\frac{3x^2-x-2}{9x^2-4}}{\frac{2x+5}{3x-2}}=\frac{3x^2-x-2}{9x^2-4}\cdot\frac{3x-2}{2x+5}=\frac{(3x+2)(x-1)}{(3x+2)(3x-2)}\cdot\frac{3x-2}{2x+5}=\frac{x-1}{2x+5}$

10. $$\frac{\dfrac{x+2}{x-1}+\dfrac{x-2}{x+1}}{\dfrac{x+3}{x-1}+\dfrac{x-3}{x+1}}$$

$$=\frac{\dfrac{(x+2)(x+1)}{(x-1)(x+1)}+\dfrac{(x-2)(x-1)}{(x-1)(x+1)}}{\dfrac{(x+3)(x+1)}{(x-1)(x+1)}+\dfrac{(x-3)(x-1)}{(x-1)(x+1)}}$$

$$=\frac{\dfrac{x^2+3x+2}{(x-1)(x+1)}+\dfrac{x^2-3x+2}{(x-1)(x+1)}}{\dfrac{x^2+4x+3}{(x-1)(x+1)}+\dfrac{x^2-4x+3}{(x-1)(x+1)}}$$

$$=\frac{\dfrac{2x^2+4}{(x-1)(x+1)}}{\dfrac{2x^2+6}{(x-1)(x+1)}}$$

$$=\frac{2x^2+4}{(x-1)(x+1)}\cdot\frac{(x-1)(x+1)}{2x^2+6}$$

$$=\frac{2(x^2+2)}{(x-1)(x+1)}\cdot\frac{(x-1)(x+1)}{2(x^2+3)}$$

$$=\frac{x^2+2}{x^2+3}$$

Lesson 30

1. In order to find the x-intercepts, we first perform any cancellations that are possible between the numerator and denominator and then determine those values of x that make the resulting numerator equal to 0. In this case, there are no cancellations to perform, so we simply need to determine those values of x for which

   $$(x+1)(x-1)(x+2)(x+5)^2 = 0$$

   These will be the values that make $x + 1 = 0$ or $x - 1 = 0$ or $x + 2 = 0$ or $x + 5 = 0$. These are $x = -1$, $x = 1$, $x = -2$, and $x = -5$. So these are the x-intercepts.

2. In order to find the x-intercepts, we first perform any cancellations that are possible between the numerator and denominator and then determine those values of x that make the resulting numerator equal to 0. In order to do this, we must factor the numerator and denominator.

   $$\frac{x^2-12x+35}{x^2-4} = \frac{(x-5)(x-7)}{(x-2)(x+2)}$$

   In this case, there are no cancellations to perform, so we simply need to determine those values of x for which $(x - 5)(x - 7) = 0$. These are the values $x = 5$ and $x = 7$. So these are the x-intercepts.

3. In order to find the x-intercepts, we first perform any cancellations that are possible between the numerator and denominator and then determine those values of x that make the resulting numerator equal to 0. In order to do this, we must factor the numerator and denominator.

   $$\frac{5}{x^2-9} = \frac{5}{(x-3)(x+3)}$$

   In this case, there are no cancellations to perform, so we simply need to determine those values of x for which $5 = 0$. These are no values of x that make this equation true. So there are no x-intercepts.

4. In order to find the x-intercepts, we first perform any cancellations that are possible between the numerator and denominator and then determine those values of x that make the resulting numerator equal to 0. In this case, the original expression simplifies to

   $$y = \frac{x+7}{x+5}$$

   So there is just one x-intercept and it is at $x = -7$.

5. In order to find the vertical asymptotes, we first perform any cancellations that are possible between the numerator and denominator and then determine those values of x that make the resulting denominator equal to 0. In this case, there are no cancellations to perform, so we simply need to determine those values of x for which $x(x+4)(x-3) = 0$. These will be the values that make $x = 0$ or $x + 4 = 0$ or $x - 3 = 0$. These are $x = 0$, $x = -4$, and $x = 3$. So these are the equations of the vertical asymptotes.

6. In order to find the vertical asymptotes, we first perform any cancellations that are possible between the numerator and denominator and then determine those values of x that make the resulting denominator equal to 0. In order to do this, we must factor the numerator and denominator.

   $$\frac{x^2-12x+35}{x^2-4} = \frac{(x-5)(x-7)}{(x-2)(x+2)}$$

   In this case, there are no cancellations to perform, so we simply need to determine those values of x for which $(x-2)(x+2) = 0$. These will be the values that make $x = 2$ or $x = -2$. So these are the equations of the vertical asymptotes.

7. In order to find the vertical asymptotes, we first perform any cancellations that are possible between the numerator and denominator and then determine those values of x that make the resulting denominator equal to 0. In this case, the original expression simplifies to

$$y = \frac{x+7}{x+5}$$

So there is just one vertical asymptote, and it is the line $x = -5$.

8. Since the degree of the polynomial in the numerator equals the degree of the polynomial in the denominator, the equation of the horizontal asymptote is $y = \frac{5}{3}$.

9. Since the degree of the polynomial in the numerator is less than the degree of the polynomial in the denominator, the equation of the horizontal asymptote is $y = 0$.

10. Since the degree of the polynomial in the numerator is greater than the degree of the polynomial in the denominator, there is no horizontal asymptote.

Lesson 31

1. x-intercept(s): There are no x-intercepts because the equation $4 = 0$ has no solutions.

y-intercept: The y-intercept is $(0, -2)$ because $\frac{4}{0-2} = \frac{4}{-2} = -2$.

horizontal asymptote: The horizontal asymptote is the line $y = 0$ because the degree of the dominant term in the numerator is 0 and the degree of the dominant term in the denominator is 1, and $0 < 1$.

vertical asymptote: The vertical asymptote occurs at the line $x = 2$.

After collecting all this information and plotting several other points on the graph, we find that the graph is as follows.

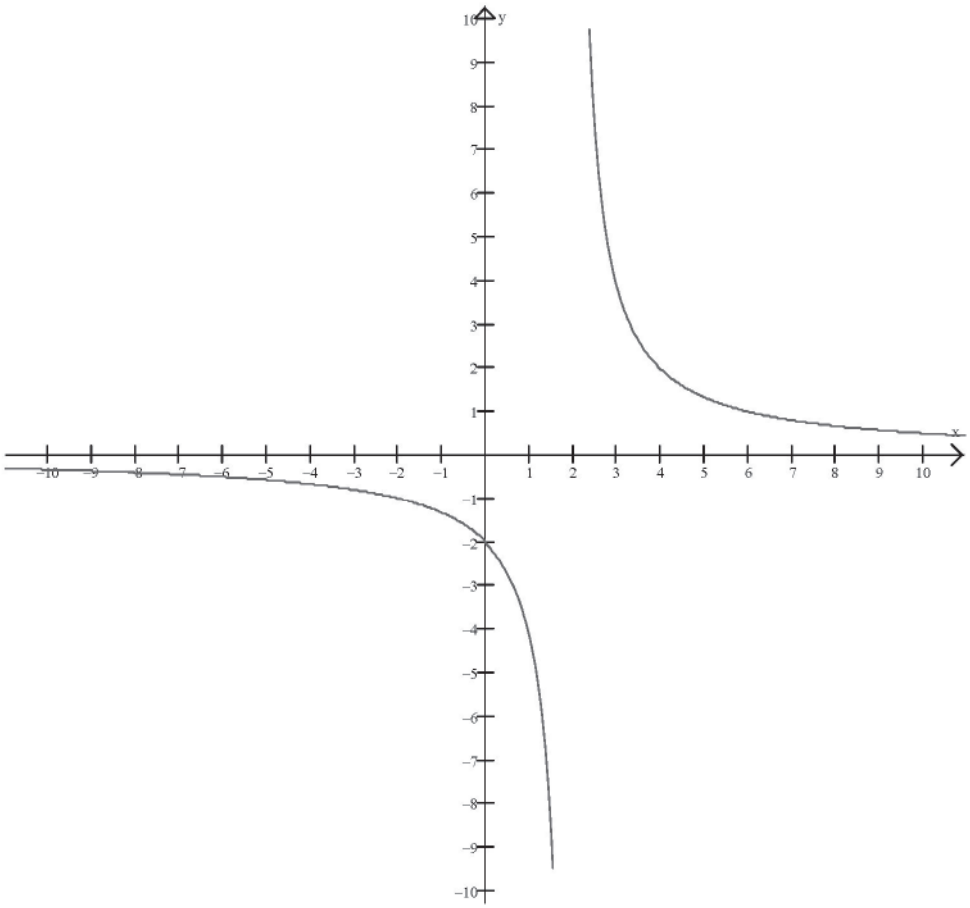

2. x-intercept(s): There are no x-intercepts because the equation $-3 = 0$ has no solutions.

y-intercept: The y-intercept is $(0, -1/2)$ because $\frac{-3}{0+6} = \frac{-3}{6} = -1/2$.

horizontal asymptote: The horizontal asymptote is the line $y = 0$ because the degree of the dominant term in the numerator is 0 and the degree of the dominant term in the denominator is 1, and $0 < 1$.

vertical asymptote: The vertical asymptote occurs at the line $x = -6$.

After collecting all this information and plotting several other points on the graph, we find that the graph is as follows.

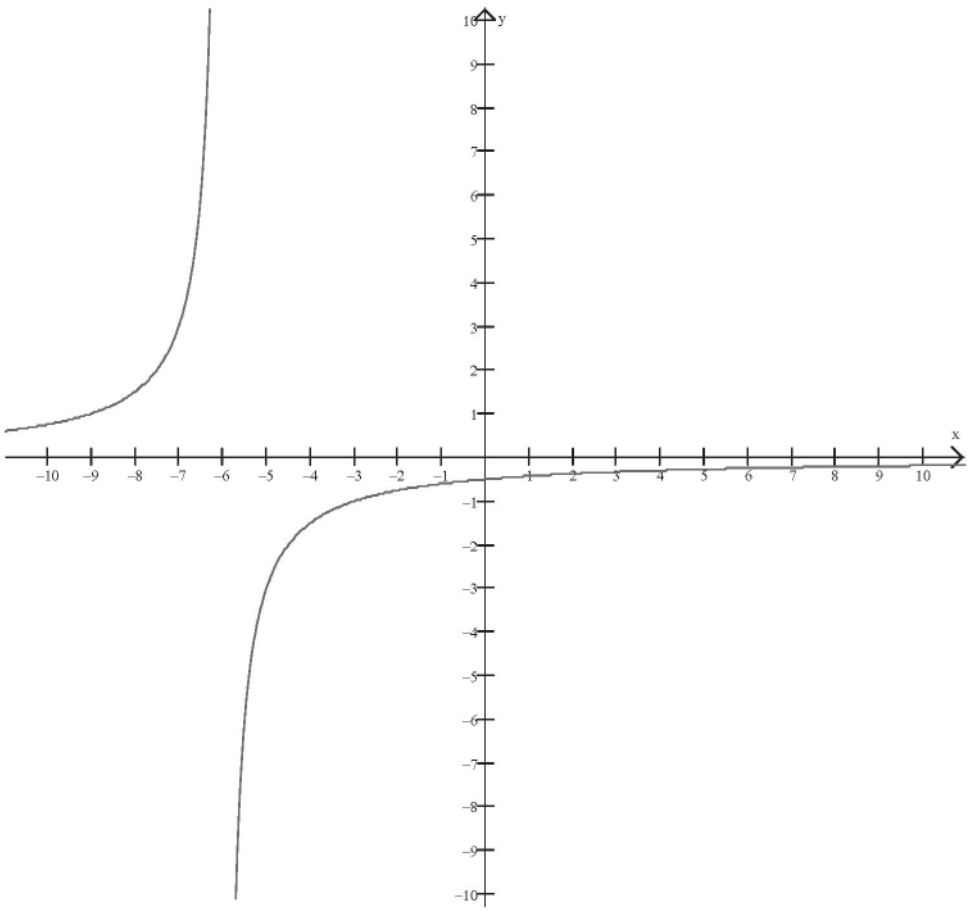

3. Notice that the original equation can also be written as $y = \frac{4(x+2)}{x-4}$. We see that there is no cancellation that can take place here.

x-intercept(s): There is one x-intercept at $(-2, 0)$ because -2 is a solution of the equation $4(x + 2) = 0$.

y-intercept: The y-intercept is $(0, -2)$ because $\frac{4(0)+8}{0-4} = \frac{8}{-4} = -2$.

horizontal asymptote: The horizontal asymptote is the line $y = 4$ because the degree of the dominant term in the numerator is 1 and the degree of the dominant term in the denominator is 1, and the ratio of the leading coefficients from numerator and denominator is $4/1 = 4$.

vertical asymptote: The vertical asymptote occurs at the line $x = 4$.

After collecting all this information and plotting several other points on the graph, we find that the graph is as follows.

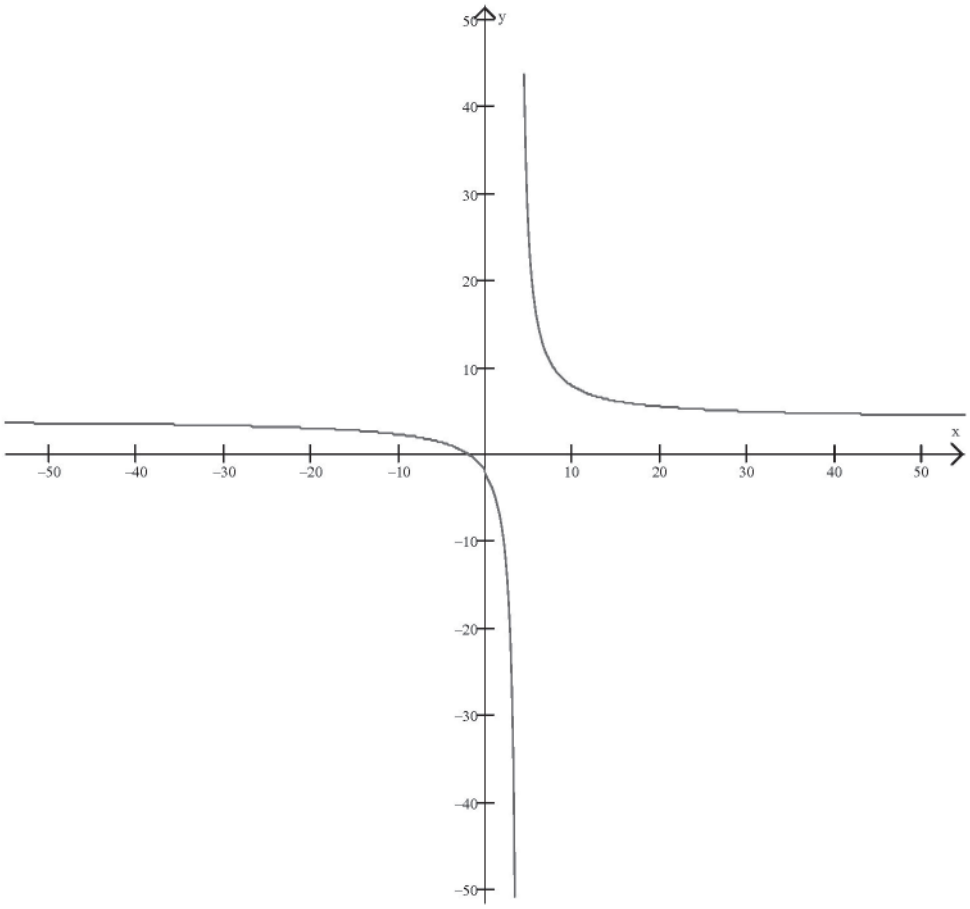

Solutions

4. Notice that the original equation can also be written as $y = \dfrac{2(3x+2)}{3x-2}$. We see that there is no cancellation that can take place here.

x-intercept(s): There is one x-intercept at $(-2/3, 0)$ because $-2/3$ is a solution of the equation $6x + 4 = 0$.

y-intercept: The y-intercept is $(0, -2)$ because $\dfrac{6(0)+4}{3(0)-2} = \dfrac{4}{-2} = -2$.

horizontal asymptote: The horizontal asymptote is the line $y = 2$ because the degree of the dominant term in the numerator is 1 and the degree of the dominant term in the denominator is 1, and the ratio of the leading coefficients from numerator and denominator is $6/3 = 2$.

vertical asymptote: The vertical asymptote occurs at the line $x = 2/3$.

After collecting all this information and plotting several other points on the graph, we find that the graph is as follows.

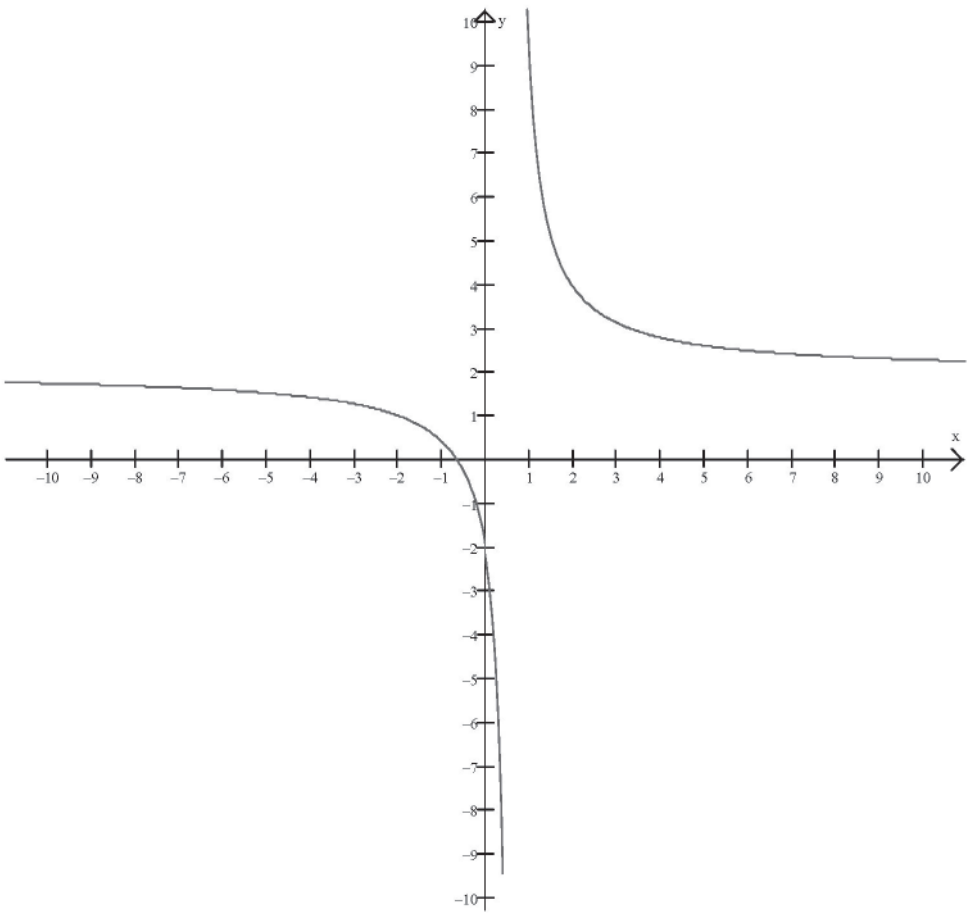

5. x-intercept(s): There is one x-intercept at (0, 0) because 0 is a solution of the equation $x = 0$.

y-intercept: The y-intercept is (0, 0) because $\dfrac{0}{(0-1)(0-5)} = \dfrac{0}{(-1)(-5)} = \dfrac{0}{5} = 0$.

horizontal asymptote: The horizontal asymptote is the line $y = 0$ because the degree of the dominant term in the numerator is 1 and the degree of the dominant term in the denominator is 2, and $1 < 2$.

vertical asymptote: The vertical asymptotes occur at the lines $x = 1$ and $x = 5$.

After collecting all this information and plotting several other points on the graph, we find that the graph is as follows.

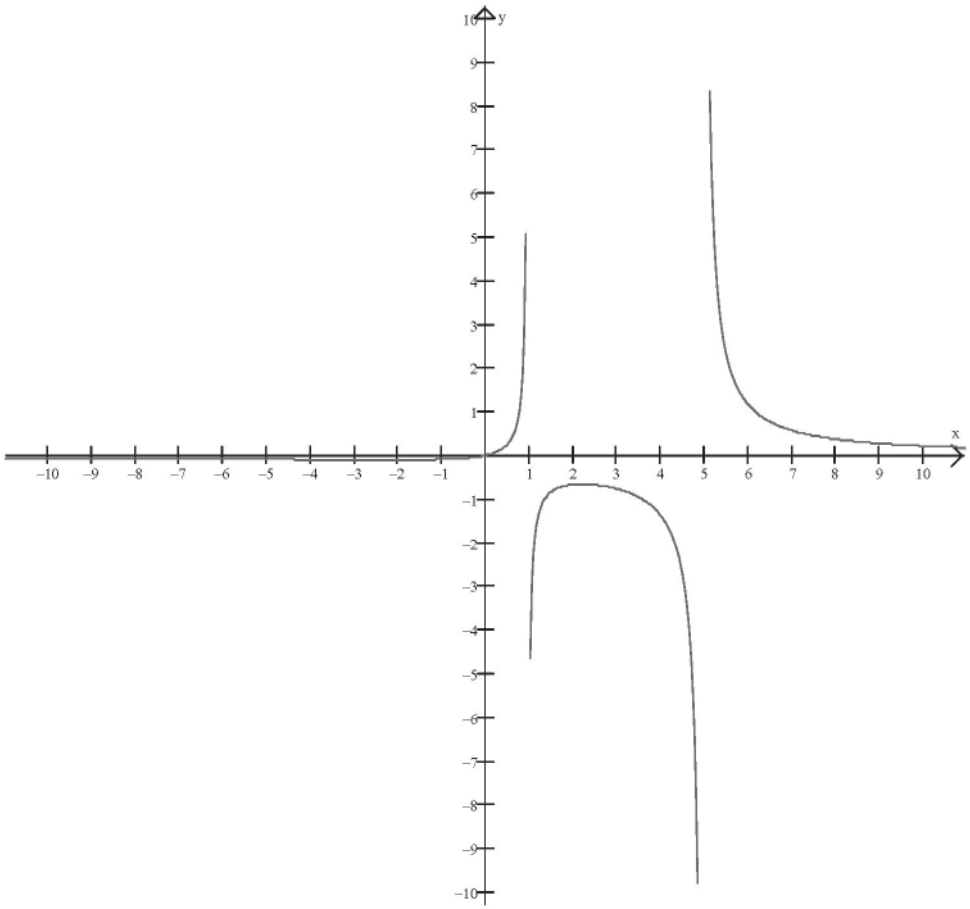

Solutions

6. x-intercept(s): There is one x-intercept at (0, 0) because 0 is a solution of the equation $x^2 = 0$.

y-intercept: The y-intercept is (0, 0) because $\dfrac{0^2}{(0-1)(0-5)} = \dfrac{0}{(-1)(-5)} = \dfrac{0}{5} = 0$.

horizontal asymptote: The horizontal asymptote is the line $y = 1$ because the degree of the dominant term in the numerator is 2 and the degree of the dominant term in the denominator is 2, and the ratio of the leading coefficients from numerator and denominator is 1/1 = 1.

vertical asymptote: The vertical asymptotes occur at the lines $x = 1$ and $x = 5$.

After collecting all this information and plotting several other points on the graph, we find that the graph is as follows.

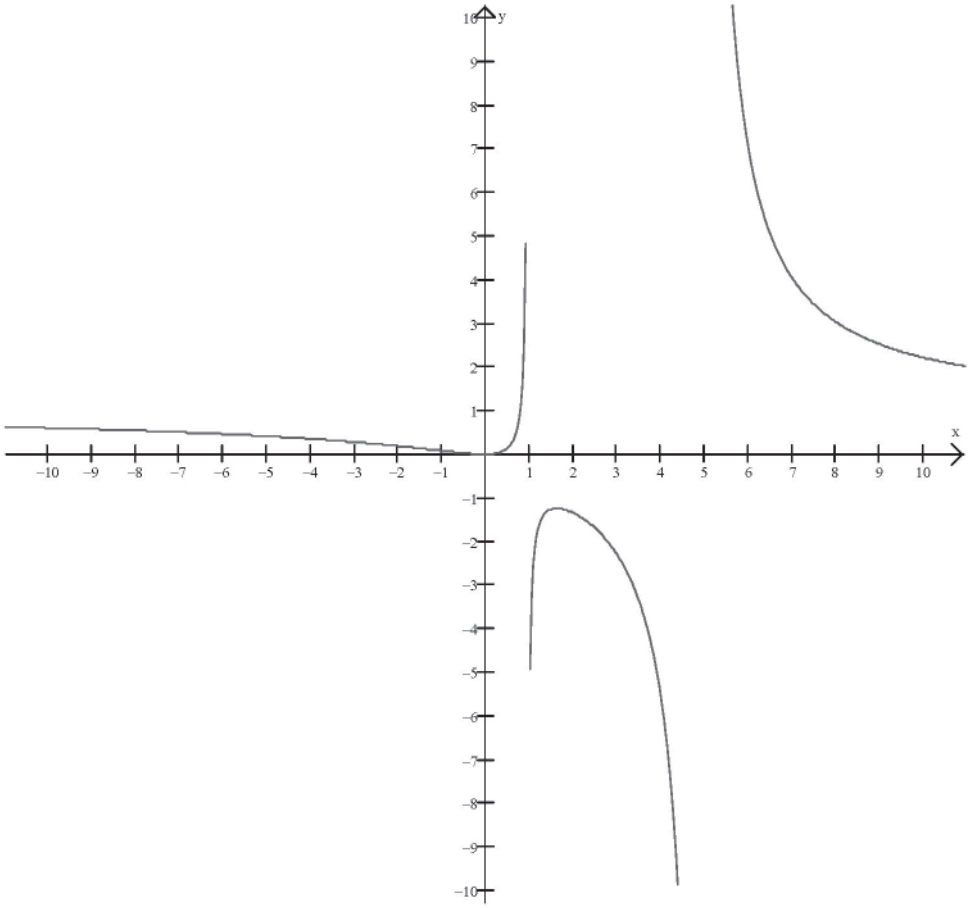

7. x-intercept(s): There is one x-intercept at (0, 0) because 0 is a solution of the equation $x^2 = 0$.

y-intercept: The y-intercept is (0, 0) because $\frac{0^2}{0-3} = \frac{0}{-3} = 0$.

horizontal asymptote: There is no horizontal asymptote because the degree of the dominant term in the numerator is 2 and the degree of the dominant term in the denominator is 1, and $2 > 1$.

vertical asymptote: The vertical asymptote occurs at the line $x = 3$.

After collecting all this information and plotting several other points on the graph, we find that the graph is as follows.

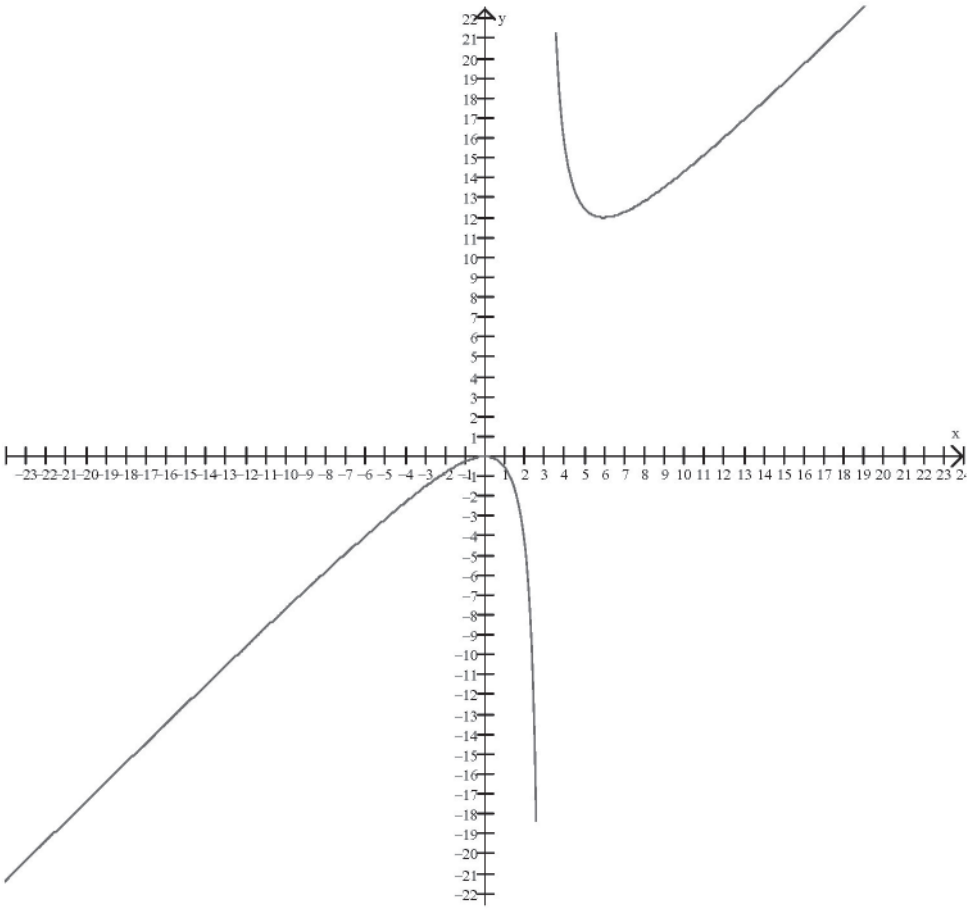

8. x-intercept(s): There are no x-intercepts because the equation $4x^2 + 1 = 0$ has no solutions.

y-intercept: The y-intercept is $(0, -1)$ because $\frac{4(0)^2+1}{0-1} = \frac{1}{-1} = -1$.

horizontal asymptote: There is no horizontal asymptote because the degree of the dominant term in the numerator is 2 and the degree of the dominant term in the denominator is 1, and $2 > 1$.

vertical asymptote: The vertical asymptote occurs at the line $x = 1$.

After collecting all this information and plotting several other points on the graph, we find that the graph is as follows.

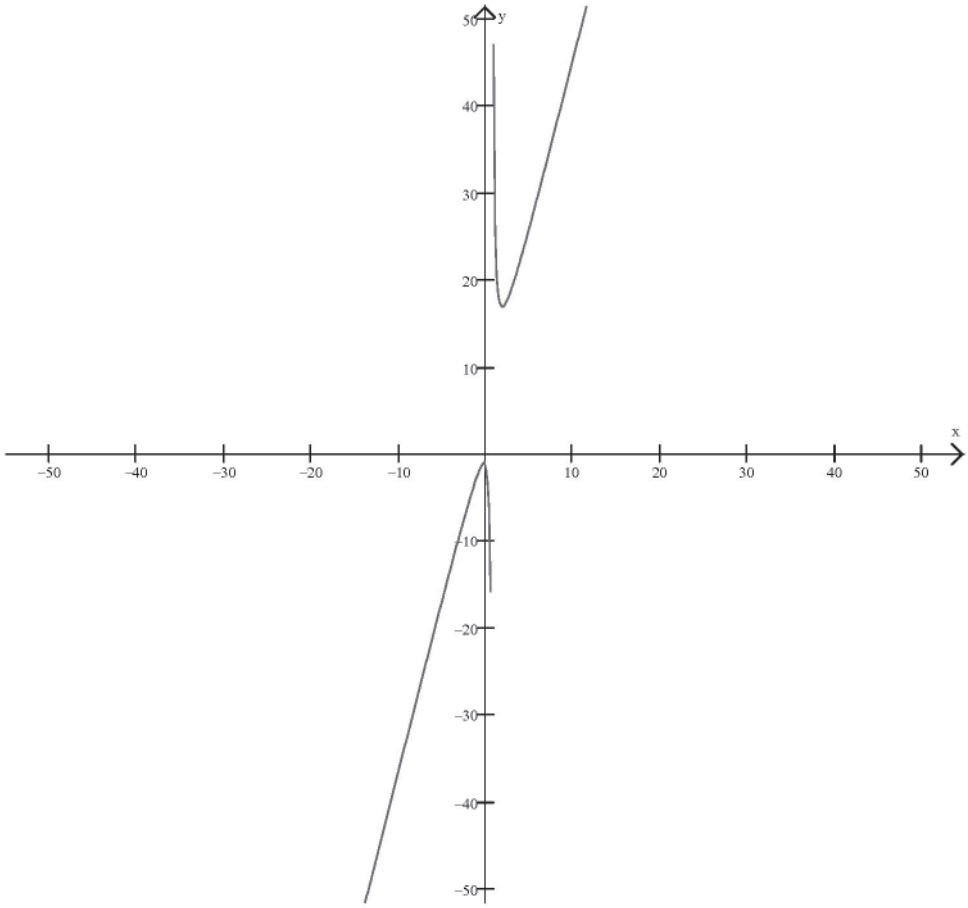

9. Notice that this is the same as $y = \dfrac{x-5}{(x-5)(x+5)} = \dfrac{1}{x+5}$ with the reminder that the number $x = 5$ is NOT in the domain of the original function. So the graph of the original function is the same as the graph of $y = \dfrac{1}{x+5}$ but with an open circle at the point where $x = 5$.

So we now wish to consider the graph of $y = \dfrac{1}{x+5}$.

x-intercept(s): There are no x-intercepts because the equation $1 = 0$ has no solutions.

y-intercept: The y-intercept is (0, 1/5) because $\dfrac{1}{0+5} = \dfrac{1}{5}$.

horizontal asymptote: The horizontal asymptote is the line $y = 0$ because the degree of the dominant term in the numerator is 0 and the degree of the dominant term in the denominator is 1, and $0 < 1$.

vertical asymptote: The vertical asymptote occurs at the line $x = -5$.

After collecting all this information and plotting several other points on the graph, we find that the graph is as follows.

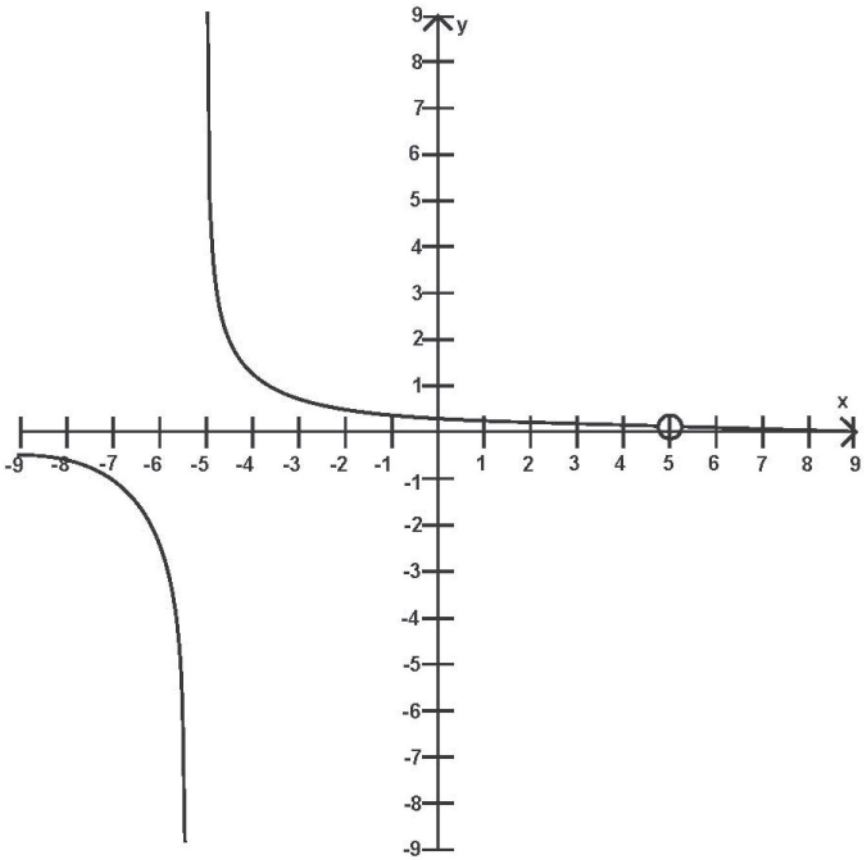

Solutions

10. Notice that this is the same as $y = \dfrac{(x-4)(x+4)}{x+4} = x-4$ with the reminder that the number $x = -4$ is *not* in the domain of the original function (because it causes division by 0 in the original function). So the graph of the original function is the same as the graph of $y = x-4$ but with an open circle at the point where $x = -4$. So we now wish to consider the graph of $y = x-4$. But this is simply a straight line with slope 1 and y-intercept $(0, -4)$. This is easily graphed.

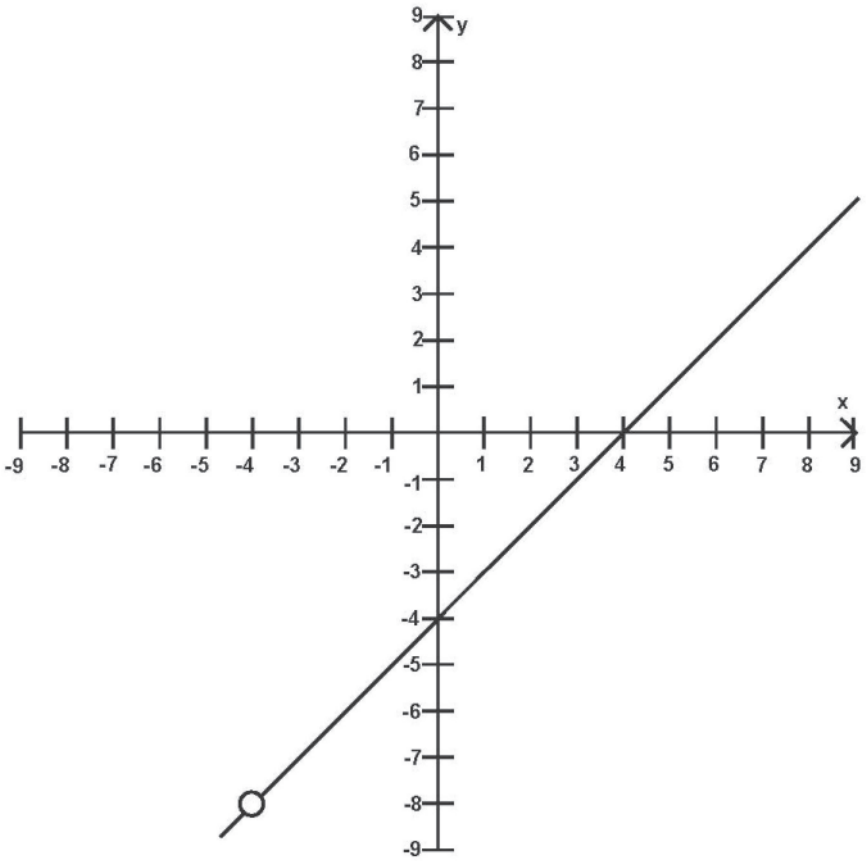

Lesson 32

1. $\sqrt{150} = \sqrt{25}\sqrt{6} = 5\sqrt{6}$
2. $\sqrt{72t^9} = \sqrt{72}\sqrt{t^9} = \sqrt{36}\sqrt{2}\sqrt{t^8}\sqrt{t} = 6t^4\sqrt{2}\sqrt{t} = 6t^4\sqrt{2t}$
3. $\sqrt{50x^9}\sqrt{200x^3} = (5x^4\sqrt{2x})(10x\sqrt{2x}) = (50x^5)(2x) = 100x^6$
4. $\sqrt{\dfrac{48y^5}{27y^{11}}} = \sqrt{\dfrac{16\cdot 3\cdot y^5}{9\cdot 3\cdot y^{11}}} = \sqrt{\dfrac{16}{9y^6}} = \dfrac{4}{3y^3}$
5. $\dfrac{\sqrt{80}}{\sqrt{28x^3}} = \dfrac{4\sqrt{5}}{2x\sqrt{7x}} = \dfrac{2\sqrt{5(7x)}}{x(7x)} = \dfrac{2\sqrt{35x}}{7x^2}$
6. $6\sqrt{10} + 7\sqrt{40} = 6\sqrt{10} + 7\cdot 2\sqrt{10} = 6\sqrt{10} + 14\sqrt{10} = 20\sqrt{10}$
7. $2\sqrt{5} - 3\sqrt{40} + 7\sqrt{45} = 2\sqrt{5} - 3\cdot 2\sqrt{10} + 7\cdot 3\sqrt{5} = 2\sqrt{5} - 6\sqrt{10} + 21\sqrt{5} = 23\sqrt{5} - 6\sqrt{10}$
8. $2\sqrt{7}(4\sqrt{7} - 5) = (2\sqrt{7})(4\sqrt{7}) - (2\sqrt{7})5 = 8\cdot 7 - 10\sqrt{7} = 56 - 10\sqrt{7}$
9. $(\sqrt{2} - \sqrt{5})(\sqrt{3} + \sqrt{5}) = \sqrt{2}\sqrt{3} + \sqrt{2}\sqrt{5} - \sqrt{5}\sqrt{3} - 5 = \sqrt{6} + \sqrt{10} - \sqrt{15} - 5$

   This cannot be simplified any further.
10. $(\sqrt{13} - \sqrt{7})(\sqrt{13} + \sqrt{7}) = 13 - \sqrt{91} + \sqrt{91} - 7 = 13 - 7 = 6$

Lesson 33

1. $\sqrt{x}-1=4$

$\sqrt{x}=5$

$x=25$

Check.

$\sqrt{25}-1=4$

$5-1=4$

$4=4$

True

2. $\sqrt{y-3}=8$

$y-3=64$

$y=67$

Check.

$\sqrt{67-3}=8$

$\sqrt{64}=8$

$8=8$

True

3. $\sqrt{x+7}=-2$

$(\sqrt{x+7})^2=(-2)^2$

$x+7=4$

$x=-3$

Check.

$\sqrt{-3+7}=-2$

$\sqrt{4}=-2$

$2=-2$

False

So $x=-3$ is NOT a solution. There are no solutions of the original equation.

4. $\sqrt{7x-4}=\sqrt{5x+8}$

$7x-4=5x+8$

$2x-4=8$

$2x=12$

$x=6$

Check.

$\sqrt{7(6)-4}=\sqrt{5(6)+8}$

$\sqrt{42-4}=\sqrt{30+8}$

$\sqrt{38}=\sqrt{38}$

True

5. $\sqrt{9x+10} = \sqrt{1-3x}$

$9x + 10 = 1 - 3x$

$12x + 10 = 1$

$12x = -9$

$x = -9/12 = -3/4$

Check.

$\sqrt{9(-3/4)+10} = \sqrt{1-3(-3/4)}$

$\sqrt{-27/4+10} = \sqrt{1+9/4}$

$\sqrt{13/4} = \sqrt{13/4}$

True

6. $\sqrt{6x+7} = x$

$6x+7 = x^2$

$x^2 - 6x - 7 = 0$

$(x - 7)(x + 1) = 0$

$x = 7$ or $x = -1$

Check.

$\sqrt{6(7)+7} = 7$

$\sqrt{42+7} = 7$

$\sqrt{49} = 7$

$7 = 7$

True

$\sqrt{6(-1)+7} = -1$

$\sqrt{-6+7} = -1$

$\sqrt{1} = -1$

$1 = -1$

False

So $x = 7$ is the only solution of the original equation.

7. $\sqrt{6x} + 2 = 14$

$\sqrt{6x} = 12$

$6x = 144$

$x = 24$

Check.

$\sqrt{6(24)} + 2 = 14$

$\sqrt{144} + 2 = 14$

$12 + 2 = 14$

$14 = 14$

True

8. $\sqrt{3x}+14=5$

$\sqrt{3x}=-9$

$3x=81$

$x=27$

Check.

$\sqrt{3(27)}+14=5$

$\sqrt{81}+14=5$

$9+14=5$

$23=5$

False

So there are no solutions of the original equation.

9. $\sqrt{2x^2-9x+20}=x$

$2x^2-9x+20=x^2$

$x^2-9x+20=0$

$(x-5)(x-4)=0$

$x=5$ or $x=4$

Check.

$\sqrt{2(5)^2-9(5)+20}=5$

$\sqrt{50-45+20}=5$

$\sqrt{25}=5$

$5=5$

True

$\sqrt{2(4)^2-9(4)+20}=4$

$\sqrt{32-36+20}=4$

$\sqrt{16}=4$

$4=4$

True

So both $x=5$ and $x=4$ are solutions of the original equation.

10. $\sqrt{2x^2+5x-24}=x$

$2x^2+5x-24=x^2$

$x^2+5x-24=0$

$(x+8)(x-3)=0$

$x=-8$ or $x=3$

Check.

$\sqrt{2(-8)^2 + 5(-8) - 24} = -8$

$\sqrt{128 - 40 - 24} = -8$

$\sqrt{64} = -8$

$8 = -8$

False

$\sqrt{2(3)^2 + 5(3) - 24} = 3$

$\sqrt{18 + 15 - 24} = 3$

$\sqrt{9} = 3$

$3 = 3$

True

So $x = 3$ is the only solution of the original equation.

Lesson 34

1. The graph of this function is the same as the graph of $\sqrt{x}$ shifted to the right by two units.

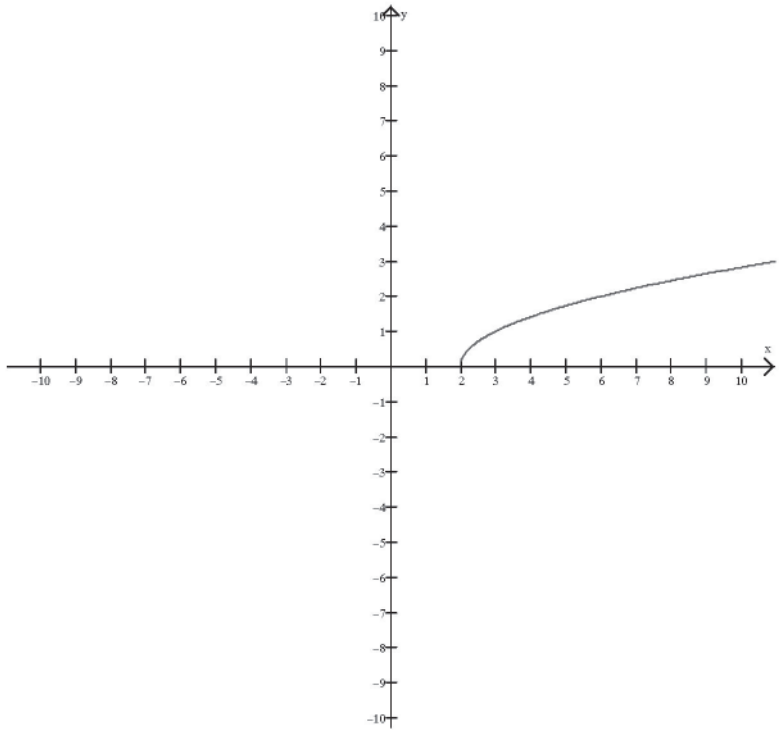

2. The graph of this function is the same as the graph of $\sqrt{x}$ shifted to the left by three units.

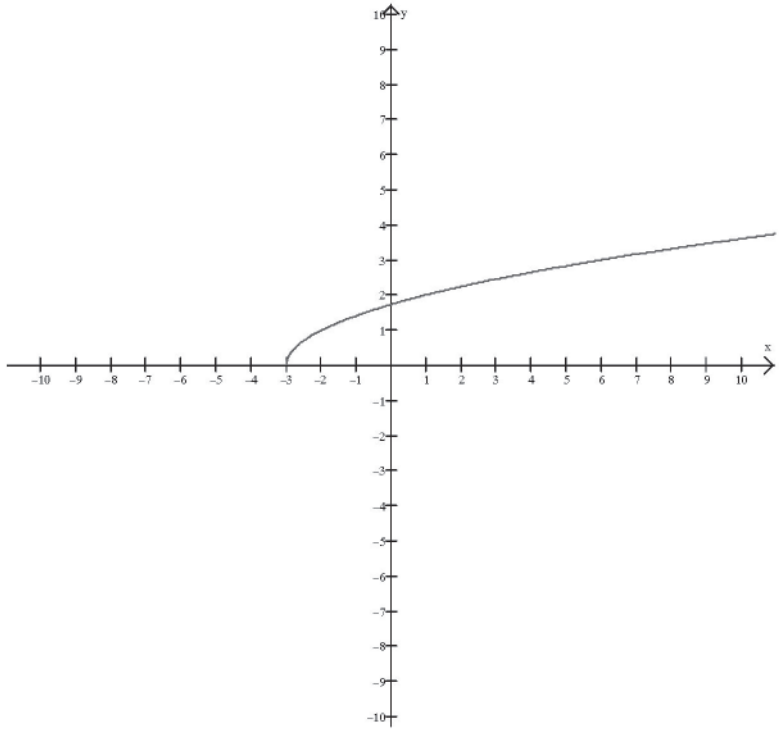

3. The graph of this function is the same as the graph of $\sqrt{x}$ shifted to the left by seven units.

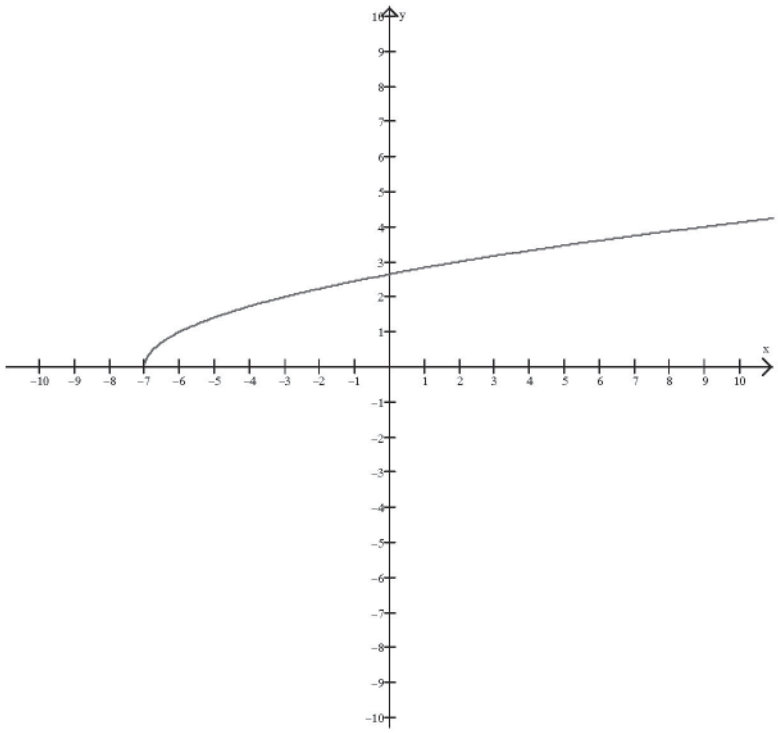

4. The graph of this function is the same as the graph of $\sqrt{x}$ shifted up by five units.

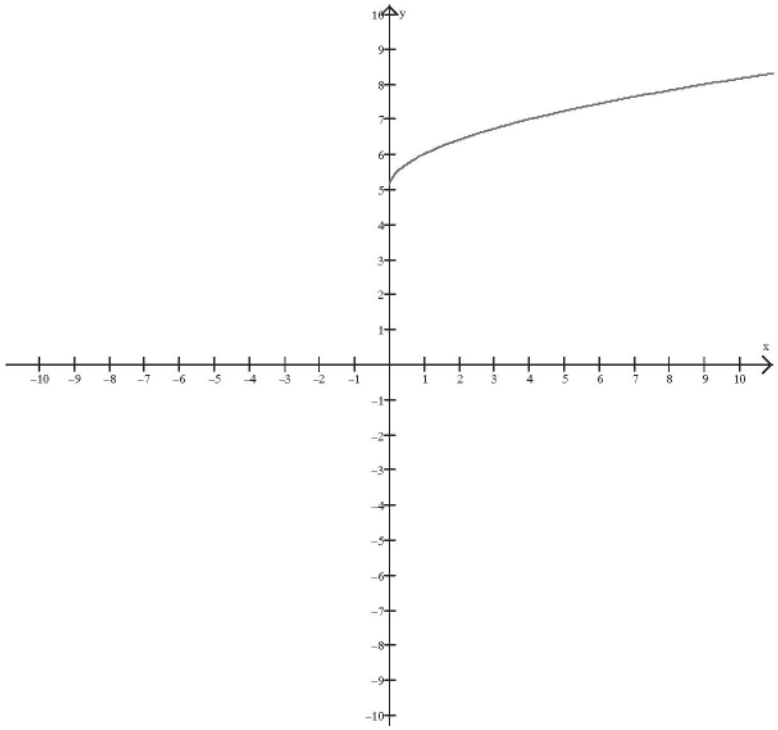

5. The graph of this function is the same as the graph of $\sqrt{x}$ shifted up by seven units.

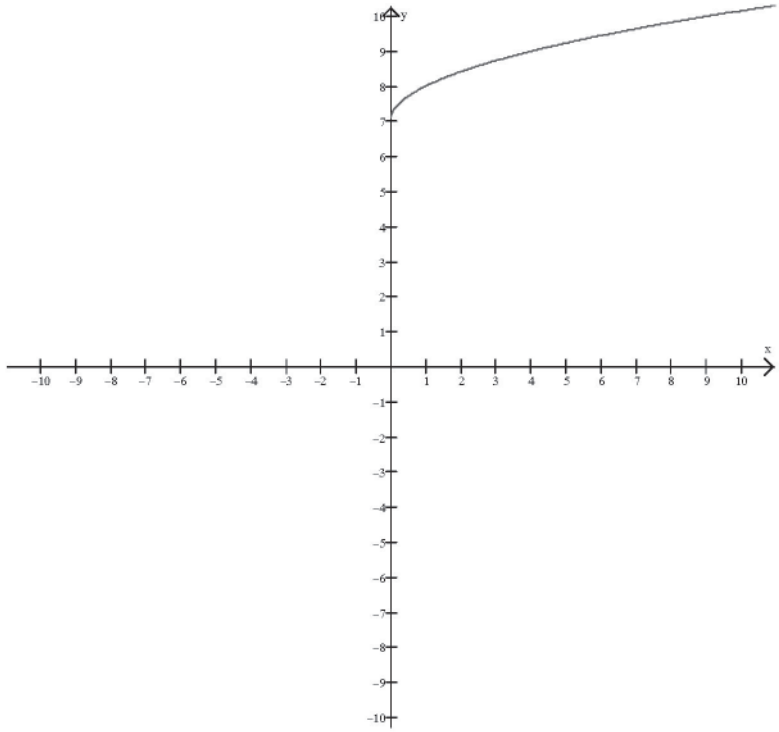

6. The graph of this function is the same as the graph of $\sqrt{x}$ shifted down by six units.

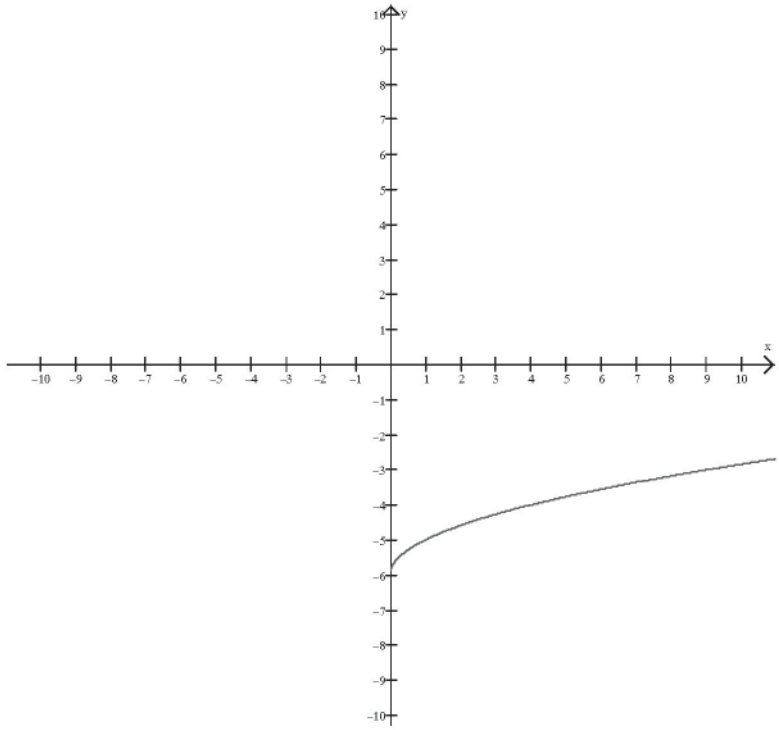

7. The graph of this function is the same as the graph of $\sqrt{x}$ shifted to the right by three units and then up by four units.

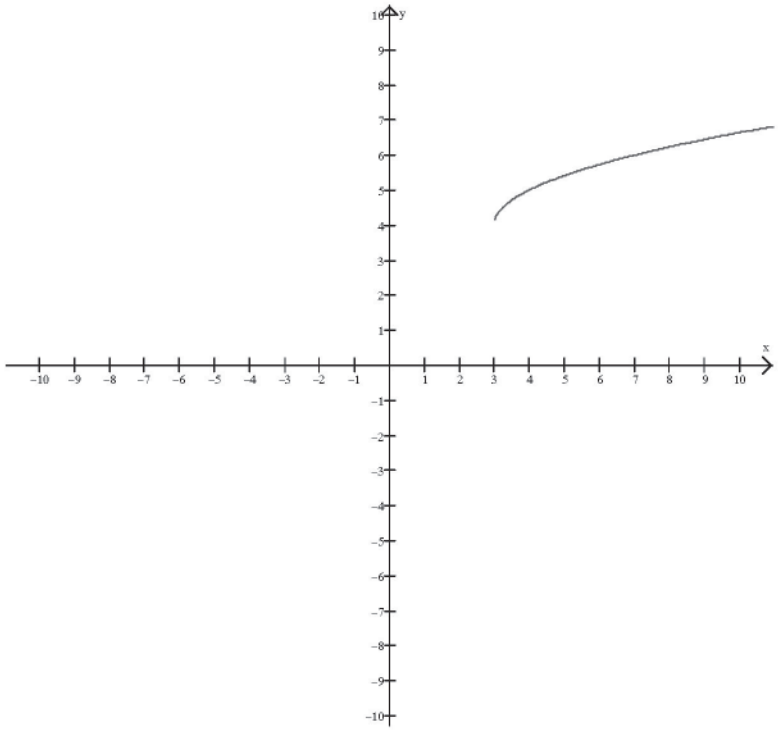

8. The graph of this function is the same as the graph of $\sqrt{x}$ shifted to the right by five units and then down by one unit.

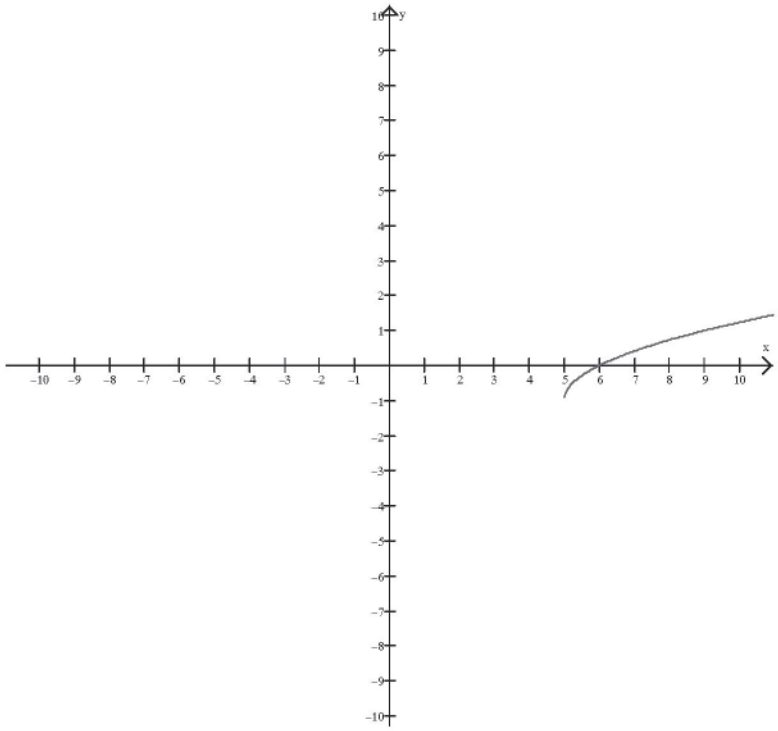

9. The graph of this function is the same as the graph of $\sqrt{x}$ shifted to the left by four units and then down by six units.

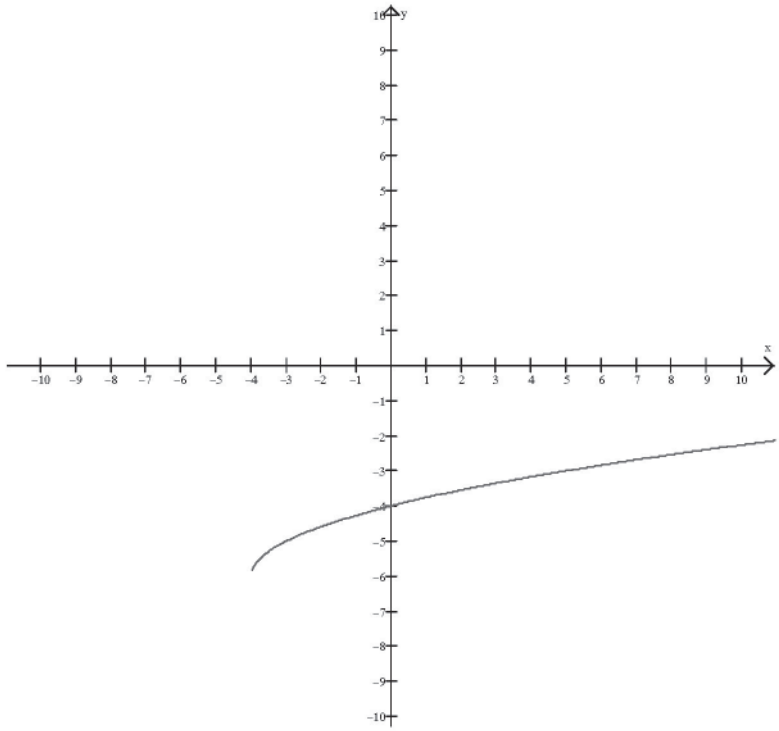

10. The graph of this function is the same as the graph of $\sqrt{x}$ but with each of the y-values of the graph doubled.

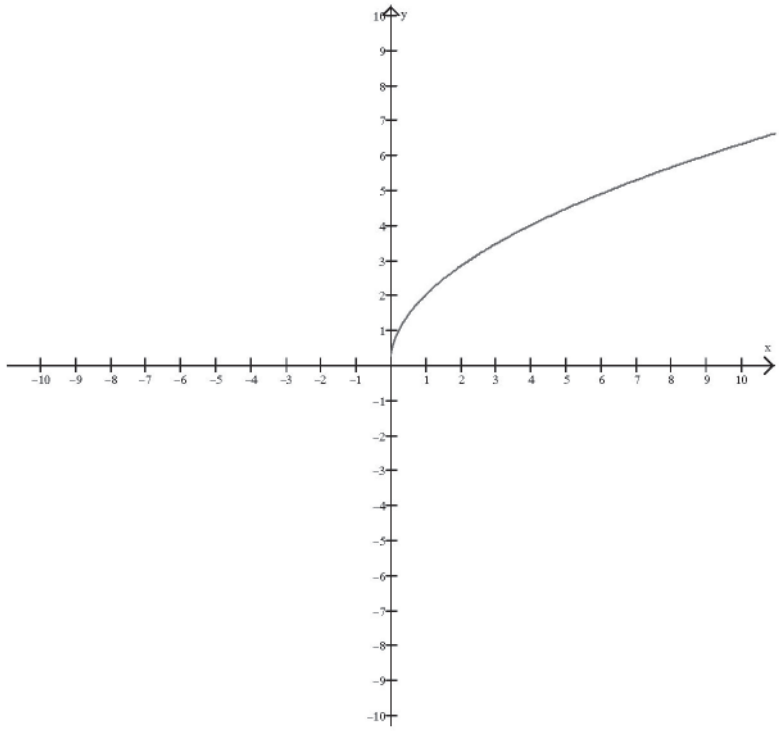

Lesson 35

1. The next term is 25, since the rule for creating each term is to add 3 to the previous term.
2. The next term is 729, since the rule for creating each term is to multiply the previous term by 3.
3. We can rewrite the terms in this sequence to see the pattern more clearly.

   $\frac{2}{2}, \frac{3}{2}, \frac{4}{2}, \frac{5}{2}, \frac{6}{2}, \frac{7}{2}, \frac{8}{2}, \ldots$

   Now we see that each term can be written as a fraction with denominator 2. Also, the numerators are simply growing by 1, so the next term is $\frac{9}{2}$.
4. The next term is 1.5625, since the rule for creating each term is to divide the previous term by 2.
5. This is a geometric sequence where each term is built by multiplying the previous term by 4. A formula for the nth term is 4^{n-1}.
6. This is a geometric sequence where each term is built by multiplying the previous term by −3. A formula for the nth term is $2 \cdot (-3)^{n-1}$.
7. This is a geometric sequence where each term is built by multiplying the previous term by 1/5. A formula for the nth term is $100 \cdot (\frac{1}{5})^{n-1}$.
8. This is an arithmetic sequence where each term is built by adding 8 to the previous term. A formula for the nth term is $4 + 8(n - 1)$.
9. This is an arithmetic sequence where each term is built by adding −2 to the previous term. A formula for the nth term is $11 + (-2)(n - 1)$.
10. This is an arithmetic sequence where each term is built by adding 9 to the previous term. A formula for the nth term is $23 + 9(n - 1)$.

Lesson 36

1. We recognize these numbers to be the squares, so the nth term is given by $f(n) = n^2$.

Notice that the second differences of the sequence are constant.

```
1  4  9  16  25  36  49  64  81
 \/ \/ \/  \/  \/  \/  \/  \/
 3  5  7   9  11  13  15  17
   \/ \/ \/  \/  \/  \/  \/
   2  2  2   2   2   2   2
```

So we know that the formula needed to be a polynomial of degree 2, and that is exactly what we see with the formula $f(n) = n^2$.

2. We recognize these numbers to be the cubes, so the nth term is given by $f(n) = n^3$.

Notice that the third differences of the sequence are constant.

```
1  8   27  64  125  216
 \/  \/  \/  \/   \/
 7   19  37  61   91
   \/  \/  \/  \/
  12   18  24  30
     \/  \/  \/
     6   6   6
```

So we know that the formula needed to be a polynomial of degree 3, and that is exactly what we see with the formula $f(n) = n^3$.

3. We look at the first differences of the sequence.

```
1  3  6  10  15  21  28  36  45
 \/ \/ \/  \/  \/  \/  \/  \/
 2  3  4   5   6   7   8   9
```

Next let's look at the second differences.

```
1  3  6  10  15  21  28  36  45
 \/ \/ \/  \/  \/  \/  \/  \/
 2  3  4   5   6   7   8   9
   \/ \/  \/  \/  \/  \/  \/
   1  1   1   1   1   1   1
```

So the second differences are constant. That means the formula for the nth term of the sequence is a degree 2 polynomial. So let $f(n) = an^2 + bn + c$ where a, b, and c are constants.

Next we know that $f(1) = 1$, $f(2) = 3$, and $f(3) = 6$. Therefore, we have

$$1 = f(1) = a(1)^2 + b(1) + c = a + b + c$$

$$3 = f(2) = a(2)^2 + b(2) + c = 4a + 2b + c$$

$$6 = f(3) = a(3)^2 + b(3) + c = 9a + 3b + c$$

So we have the following system of equations.

$$a + b + c = 1$$

$$4a + 2b + c = 3$$

$$9a + 3b + c = 6$$

If we subtract the first equation from the second equation, we have $3a + b = 2$. If we subtract the second equation from the third equation, we have $5a + b = 3$. So we have a new system of two equations.

$$3a + b = 2$$

$$5a + b = 3$$

Now subtract the first of these equations from the second to get $2a = 1$ or $a = 1/2$. If we plug $a = 1/2$ back into the equation $3a + b = 2$, then we have

$3(1/2) + b = 2$

$b = 2 - 3/2$

$b = 4/2 - 3/2$

$b = 1/2$

Now we plug in $a = 1/2$ and $b = 1/2$ into the original equation $a + b + c = 1$ to get

$1/2 + 1/2 + c = 1$

$1 + c = 1$

$c = 0$

Therefore, we now know our formula: $f(n) = an^2 + bn + c = \frac{1}{2}n^2 + \frac{1}{2}n$.

You can check that this formula holds for each of the numbers that were given in the original problem.

4. We look at the first differences of the sequence.

```
3   9   19  33  51  73  99  129  163
  \/  \/  \/  \/  \/  \/  \/   \/
  6  10  14  18  22  26  30   34
```

Next let's look at the second differences.

```
3   9   19  33  51  73  99  129  163
  \/  \/  \/  \/  \/  \/  \/   \/
  6  10  14  18  22  26  30   34
    \/  \/  \/  \/  \/  \/   \/
    4   4   4   4   4   4    4
```

So the second differences are constant. That means the formula for the nth term of the sequence is a degree 2 polynomial. So let $f(n) = an^2 + bn + c$ where a, b, and c are constants.

Next we know that $f(1) = 3$, $f(2) = 9$, and $f(3) = 19$. Therefore, we have

$3 = f(1) = a(1)^2 + b(1) + c = a + b + c$

$9 = f(2) = a(2)^2 + b(2) + c = 4a + 2b + c$

$19 = f(3) = a(3)^2 + b(3) + c = 9a + 3b + c$

So we have the following system of equations.

$a + b + c = 3$

$4a + 2b + c = 9$

$9a + 3b + c = 19$

If we subtract the first equation from the second equation, we have $3a + b = 6$. If we subtract the second equation from the third equation, we have $5a + b = 10$. So we have a new system of two equations.

$3a + b = 6$

$5a + b = 10$

Now subtract the first of these equations from the second to get $2a = 4$ or $a = 2$. If we plug $a = 2$ back into the equation $3a + b = 6$, then we have

$3(2) + b = 6$

$b = 6 - 6$

$b = 0$

Now we plug in $a = 2$ and $b = 0$ into the original equation $a + b + c = 3$ to get

$2 + 0 + c = 3$

$c = 1$

Therefore, we now know our formula: $f(n) = an^2 + bn + c = 2n^2 + 0n + 1 = 2n^2 + 1$.

You can check that this formula holds for each of the numbers that were given in the original problem.

5. We look at the first differences of the sequence.

2 2 4 8 14 22 32 44 58
\/ \/ \/ \/ \/ \/ \/ \/
0 2 4 6 8 10 12 14

Next let's look at the second differences.

2 2 4 8 14 22 32 44 58
\/ \/ \/ \/ \/ \/ \/ \/
0 2 4 6 8 10 12 14
\/ \/ \/ \/ \/ \/ \/
2 2 2 2 2 2 2

So the second differences are constant. That means the formula for the nth term of the sequence is a degree 2 polynomial. So let $f(n) = an^2 + bn + c$ where a, b, and c are constants.

Next we know that $f(1) = 2$, $f(2) = 2$, and $f(3) = 4$. Therefore, we have

$2 = f(1) = a(1)^2 + b(1) + c = a + b + c$

$2 = f(2) = a(2)^2 + b(2) + c = 4a + 2b + c$

$4 = f(3) = a(3)^2 + b(3) + c = 9a + 3b + c$

So we have the following system of equations.

$a + b + c = 2$

$4a + 2b + c = 2$

$9a + 3b + c = 4$

If we subtract the first equation from the second equation, we have $3a + b = 0$. If we subtract the second equation from the third equation, we have $5a + b = 2$. So we have a new system of two equations.

$3a + b = 0$

$5a + b = 2$

Now subtract the first of these equations from the second to get $2a = 2$ or $a = 1$. If we plug $a = 1$ back into the equation $3a + b = 0$, then we have

$3(1) + b = 0$

$b = 0 - 3$

$b = -3$

Now we plug in $a = 1$ and $b = -3$ into the original equation $a + b + c = 2$ to get

$1 + (-3) + c = 2$

$c = 2 - 1 + 3$

$c = 4$

Therefore, we now know our formula: $f(n) = an^2 + bn + c = 1n^2 - 3n + 4 = n^2 - 3n + 4$.

You can check that this formula holds for each of the numbers that were given in the original problem.

6. We look at the first differences of the sequence.

$$\begin{array}{ccccccccc} 0 & 7 & 22 & 45 & 76 & 115 & 162 & 217 & 280 \\ \vee & \vee & \vee & \vee & \vee & \vee & \vee & \vee & \\ 7 & 15 & 23 & 31 & 39 & 47 & 55 & 63 & \end{array}$$

Next let's look at the second differences.

$$\begin{array}{ccccccccc} 0 & 7 & 22 & 45 & 76 & 115 & 162 & 217 & 280 \\ \vee & \vee & \vee & \vee & \vee & \vee & \vee & \vee & \\ 7 & 15 & 23 & 31 & 39 & 47 & 55 & 63 & \\ & \vee & \vee & \vee & \vee & \vee & \vee & \vee & \\ & 8 & 8 & 8 & 8 & 8 & 8 & 8 & \end{array}$$

So the second differences are constant. That means the formula for the nth term of the sequence is a degree 2 polynomial. So let $f(n) = an^2 + bn + c$ where a, b, and c are constants.

Next we know that $f(1) = 0$, $f(2) = 7$, and $f(3) = 22$. Therefore, we have

$$0 = f(1) = a(1)^2 + b(1) + c = a + b + c$$

$$7 = f(2) = a(2)^2 + b(2) + c = 4a + 2b + c$$

$$22 = f(3) = a(3)^2 + b(3) + c = 9a + 3b + c$$

So we have the following system of equations.

$$a + b + c = 0$$

$$4a + 2b + c = 7$$

$$9a + 3b + c = 22$$

If we subtract the first equation from the second equation, we have $3a + b = 7$. If we subtract the second equation from the third equation, we have $5a + b = 15$. So we have a new system of two equations.

$$3a + b = 7$$

$$5a + b = 15$$

Now subtract the first of these equations from the second to get $2a = 8$ or $a = 4$. If we plug $a = 4$ back into the equation $3a + b = 7$, then we have

$$3(4) + b = 7$$

$$b = 7 - 12$$

$$b = -5$$

Now we plug in $a = 4$ and $b = -5$ into the original equation $a + b + c = 0$ to get

$$4 + (-5) + c = 0$$

$$c = 0 - 4 + 5$$

$$c = 1$$

Therefore, we now know our formula: $f(n) = an^2 + bn + c = 4n^2 - 5n + 1$.

You can check that this formula holds for each of the numbers that were given in the original problem.

7. Note that each term appears to be twice the previous term plus the term before. For example,

$17 = 2(7) + 3$,

$41 = 2(17) + 7$, and

$99 = 2(41) + 17$

So the next term in the sequence is $2(99) + 41 = 239$.

8. Note that each term appears to be the previous term plus twice the term before. For example,

$21 = 11 + 2(5)$,

$43 = 21 + 2(11)$, and

$85 = 43 + 2(21)$

So the next term in the sequence is $85 + 2(43) = 171$. (These are often called the **Jacobsthal numbers**.)

9. Note that each term appears to be the sum of the previous three terms. For example,

$17 = 9 + 5 + 3$,

$31 = 17 + 9 + 5$, and

$57 = 31 + 17 + 9$

So the next term in the sequence is $57 + 31 + 17 = 105$. (These are often called the **tribonacci numbers**.)

10. Note that each term appears to be n times the previous term. For example,

$24 = 6 \times 4$,

$120 = 24 \times 5$, and

$720 = 120 \times 6$

So the next term in the sequence is $720 \times 7 = 5{,}040$. (These are known as the **factorial numbers**.)

Glossary

Abscissa: a number that shows where a point on a graph is located in relation to the x-axis.

Absolute value: the number that tells you how far away a number is from zero.

Algebraic expression: a combination of mathematical symbols that might include numbers, variables, and operation symbols.

Arithmetic sequence: a sequence that is built term by term by adding the same number each time.

Binomial: an expression with two terms, such as $x + 3$ or $n - 7$.

Cartesian plane or *xy*-plane: the plane or two-dimensional space formed by two number lines, one horizontal and one vertical, so that they intersect at right angles.

Common difference: in an arithmetic sequence, the amount by which you add each time you build a new term in the sequence.

Constant term: the third term of a trinomial that has no variable in it.

Decimal: a number with a decimal point (.).

Degree of a polynomial: the largest power in the polynomial.

Denominator: the bottom number in a fraction.

Difference: the answer to a subtraction problem.

Difference of two squares: an equation that has one squared term subtracted from another term that is a square. There is no middle term in a difference of two squares.

Domain of a function: the set of input values that we can plug into the function.

Dominant term: the term in a polynomial that has the highest degree.

Equation: a mathematical sentence that uses or includes an equals sign "=".

Evaluate: plug in numbers to determine the value of an expression.

Exponent: a small number written to the upper right of a number, variable, or amount in parentheses that tells how many times the number, variable, or amount in parentheses should be multiplied by itself.

Extraneous solution: a number that appears to be a solution of a radical equation but is not.

First difference: another term for the common difference in an arithmetic sequence; the amount added to the previous term in a sequence to get the next term.

Fraction: two numbers separated by a division bar (—). The top number, or numerator, tells how many parts are represented. The bottom number, or denominator, tells how many parts make a whole.

Function: a mathematical rule or relationship that assigns exactly one output value to each input value.

Geometric sequence: a sequence that is built term by term by multiplying the same number each time.

Horizontal asymptotes: horizontal asymptotes for graphs of functions act like "borders" or "guides" for the graphs when the x-values are large, in either a positive or negative direction.

To find a horizontal asymptote, look at the dominant terms of the equation. If the exponents of the variables are the same, then the horizontal asymptote is the ratio of the two leading coefficients. If the exponent in the numerator is larger than the exponent of the denominator, then there is no horizontal asymptote. If the exponent in the numerator is smaller than the one in the denominator, the horizontal asymptote is $y = 0$.

Hypotenuse: the side of the triangle that is opposite the right angle. It is also the longest side of a right triangle.

Identity: an equation that is true for every possible value of the variable(s).

Leading coefficient: the coefficient (number) in front of the term that contains the largest power of x.

Legs of a triangle: the other two sides of the triangle that are not the hypotenuse.

Numerator: the top number in a fraction.

One-step equation: an equation that takes only one step to solve.

Ordered pair: two numbers inside parentheses that are separated by a comma. The first number is the x-coordinate, or abscissa, and the second number is the y-coordinate, or ordinate, on a graph.

Ordinate: a number that shows where a point on a graph is located in relation to the y-axis.

Origin: the point at which the axes intersect in the Cartesian plane.

Parabola: a U-shape; the graphs of quadratic functions of the form $y = ax^2 + bx + c$ are shaped like parabolas.

Parallel lines: two lines in the Cartesian plane that never intersect each other. If the lines are non-vertical, they have the same slope and different y-intercepts.

Percent: a number followed by a percent symbol (%) that tells us what part of a hundred is represented. For example, 75% means "75 per 100."

Perfect square trinomial: a trinomial (three terms) that can be written as the perfect square of a binomial (two terms).

Perpendicular lines: lines that intersect at right angles and have −1 as the product of their slopes.

Point-slope form: $y - y_1 = m(x - x_1)$.

Polynomial (in the variable x): an expression of the form $a_0 + a_1x + a_2x^2 + \ldots + a_nx^n$ where each of the a_0, a_1, a_2, …, a_n are numbers (which could be positive, negative, or zero) and the powers on all the x's are positive integers. In other words, a polynomial is a number plus or minus a number with a variable plus or minus another number with a variable that has a positive exponent plus or minus another number with a variable that has a different positive exponent, and so on.

Product: the answer to a multiplication problem.

Pythagorean Theorem: in any right triangle, the sum of the squares of the lengths of the legs equals the square of the length of the hypotenuse: $a^2 + b^2 = c^2$.

Quadrants: the Cartesian plane is divided into four quadrants by the intersection of the x- and y-axes. They are called Quadrants I, II, III, and IV. Quadrant I is the upper-right section. Quadrant II is the upper-left section. Quadrant III is the lower-left section. Quadrant IV is the lower-right section.

Quadratic equation: an equation that includes a variable raised to the second power (squared). Its typical form is $y = ax^2 + bx + c$.

Quotient: the answer to a division problem.

Radical equations: equations that contain radical expressions.

Radical expression: an expression with a radical (square root) symbol in it.

Range of a function: the set of output values of the function.

Rational expression: a "ratio" of two polynomials; one polynomial divided by another polynomial.

Right triangle: a triangle where one of the angles is a "right angle" or 90° angle.

Second difference: the difference of the first differences.

Sequence: a function whose domain is the set of natural numbers (or positive integers).

Slope: the "rate of change" of a line that is defined as follows: Slope = (vertical change of the line) / (horizontal change of the line). This can also be thought of as "rise over the run" of the line, where the rise refers to the amount of "vertical change" and the run is the "amount of horizontal change," or "the change in y over the change in x." Slope is often represented as a fraction. How to find slope using two points: $(y_2 - y_1) / (x_2 - x_1)$ where (x_1, y_1) and (x_2, y_2) are the coordinates of two points on the line.

Slope-intercept form of a line: $y = mx + b$ where m = slope of the line and b = y-intercept of the line (the place where the line crosses the y-axis).

Solution of an equation: the value of the variable that makes the equation true.

Solution of the system: an ordered pair that makes all the equations in a system of equations true.

Sum: the answer to an addition problem.

System of linear equations: a set of two or more linear equations.

Term: each number in a sequence.

Trinomial: an expression with three terms, such as $x^2 - 5x + 2$.

Two-step equation: an equation that takes two steps to solve.

Variable: some sort of symbol, usually a letter from the alphabet, that represents one or more numbers in an algebraic expression.

Vertex of a parabola: the unique lowest point or unique highest point for a given parabola.

Vertical asymptotes: if $x = c$ is a vertical asymptote of the graph of a function, then as the values of x get really close to c, the values of the function grow "huge" (either going to +infinity or –infinity). In other words, the vertical asymptote is the line near which the graph makes a sharp turn. It is not actually on the graph.

To find a vertical asymptote, look for those values of x where the denominator equals 0 after cancelling out anything that can be cancelled in the original expression.

x-axis: the horizontal number line or horizontal axis.

x-coordinate or abscissa: a number that shows where a point on a graph is located in relation to the x-axis.

y-axis: the vertical number line or vertical axis.

y-coordinate or ordinate: a number that shows where a point on a graph is located in relation to the y-axis.

Zeros of the equation: values of x that are solutions of a quadratic equation; they are the x-intercepts of the graph $ax^2 + bx + c$. They can be any number, not just zero. However, when they are plugged into the quadratic equation, $ax^2 + bx + c$, the equation is true.

Bibliography

Bellman, Alan, et al. *Algebra I*. Boston: Pearson Prentice Hall, 2007. The primary text for the course.

Brown, Richard G. *Algebra: Structure and Method Book 1*. Boston: Houghton Mifflin Harcourt, 2000. A comprehensive algebra text that covers Algebra I in detail and builds a strong foundation along the way. It focuses on the math and has great sets of real-world examples and practice problems at all difficulty levels.

Larson, Ron, Robert Hostetler, and Bruce Edwards. *Precalculus Functions and Graphs, A Graphing Approach*, 5th ed. Boston: Houghton Mifflin, 2008. An excellent source for precalculus algebra and trigonometry.

Rappaport, John. *Algebra Survival Guide: A Conversational Guide for the Thoroughly Befuddled*. Santa Fe: Singing Turtle Press, 1999. This book gently guides students toward pre-algebra and Algebra I success with an engaging question-and-answer format and practice problems and answers.

Saxon, John. *Algebra I: An Incremental Development*. Norman, OK: Saxon Publishers, Inc., 1997. A strong supportive text for the course.

Selby, Peter, and Steve Slavin. *Practical Algebra: A Self-Teaching Guide*, 2nd ed. Hoboken: John Wiley and Sons, 1991. This book provides all the basic concepts and tools of algebra with practical, real-life examples and applications and thousands of practice problems, questions, and answers. Self-tests included at the end of each chapter help students measure their progress.

Tussy, Alan S., and R. David Gustafson. *Elementary and Intermediate Algebra*. Florence, KY: Cengage Learning, 2008. This book is filled with real-life applications of math and blends instructional approaches including pedagogy, practice, and vocabulary emphasizing technology skills, communication, modeling, and reasoning.

Notes

Notes

Notes