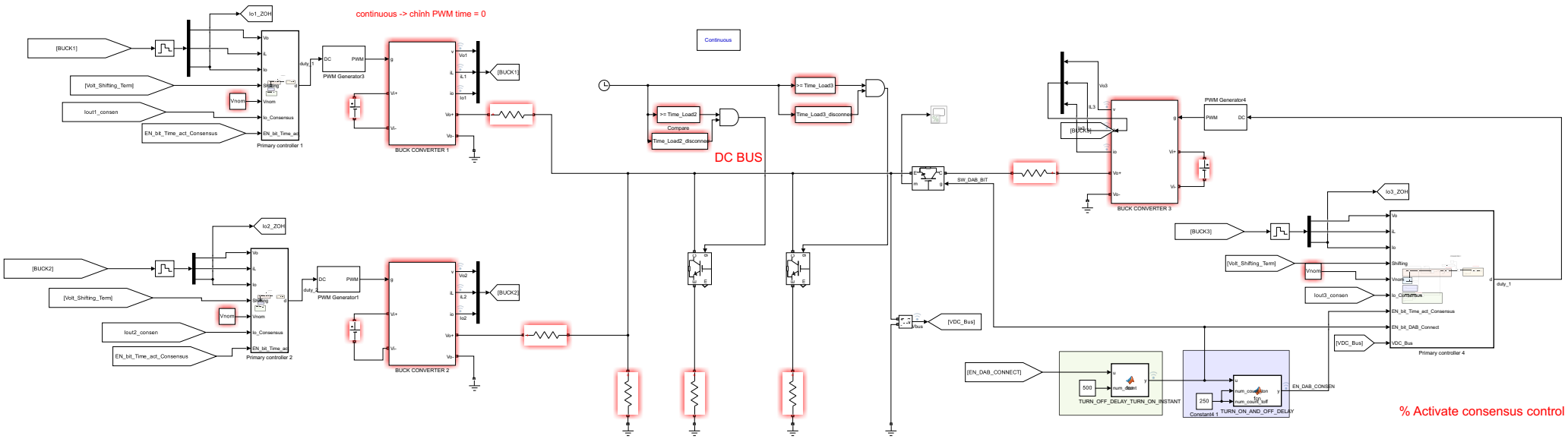
continuous -> chỉnh PWM time = 0
Continuous
DC BUS
% Activate consensus control
[BUCK1]
[Volt_Shifting_Term]
Iout1_consen
EN_bit_Time_act_Consensus
Io1_ZOH
Vnom
Primary controller 1
PWM Generator3
BUCK CONVERTER 1
[BUCK2]
Io2_ZOH
Iout2_consen
Primary controller 2
PWM Generator1
BUCK CONVERTER 2
>= Time_Load2
Compare
Time_Load2_disconnect
>= Time_Load3
Time_Load3_disconnect
SW_DAB_BIT
[VDC_Bus]
BUCK CONVERTER 3
PWM Generator4
[BUCK3]
Io3_ZOH
Iout3_consen
EN_bit_DAB_Connect
Primary controller 4
[EN_DAB_CONNECT]
TURN_OFF_DELAY_TURN_ON_INSTANT
TURN_ON_AND_OFF_DELAY
EN_DAB_CONSEN

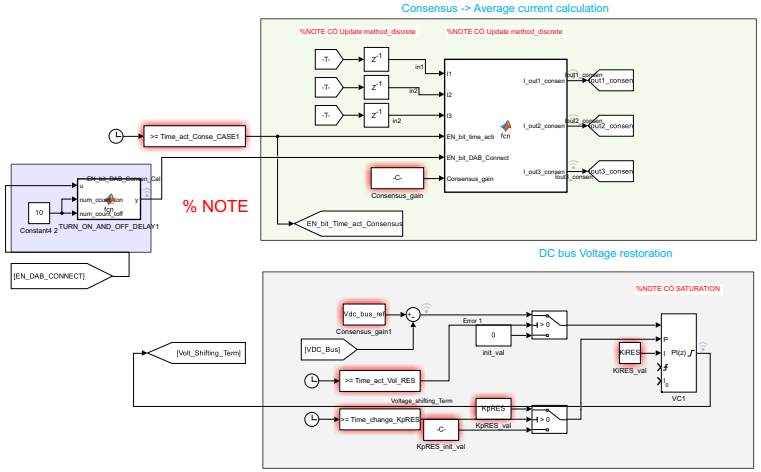
Consensus -> Average current calculation
%NOTE CÓ Update method_discrete
%NOTE CÓ Update method_discrete
>= Time_act_Conse_CASE1
% NOTE
[EN_DAB_CONNECT]
TURN_ON_AND_OFF_DELAY1
EN_bit_Time_act_Consensus
Consensus_gain
DC bus Voltage restoration
%NOTE CÓ SATURATION
[Volt_Shifting_Term]
[VDC_Bus]
>= Time_act_Vol_RES
>= Time_change_KpRES
Voltage_shifting_Term
KiRES_val
KpRES_val
KpRES_init_val
init_val
VC1

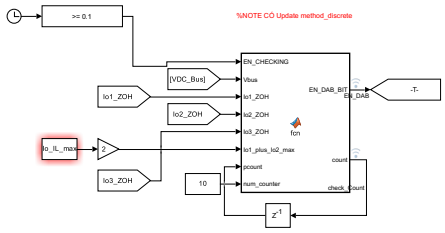
>= 0.1
%NOTE CÓ Update method_discrete
[VDC_Bus]
Io1_ZOH
Io2_ZOH
Io3_ZOH
Io_IL_max
EN_CHECKING
EN_DAB_BIT
EN_DAB