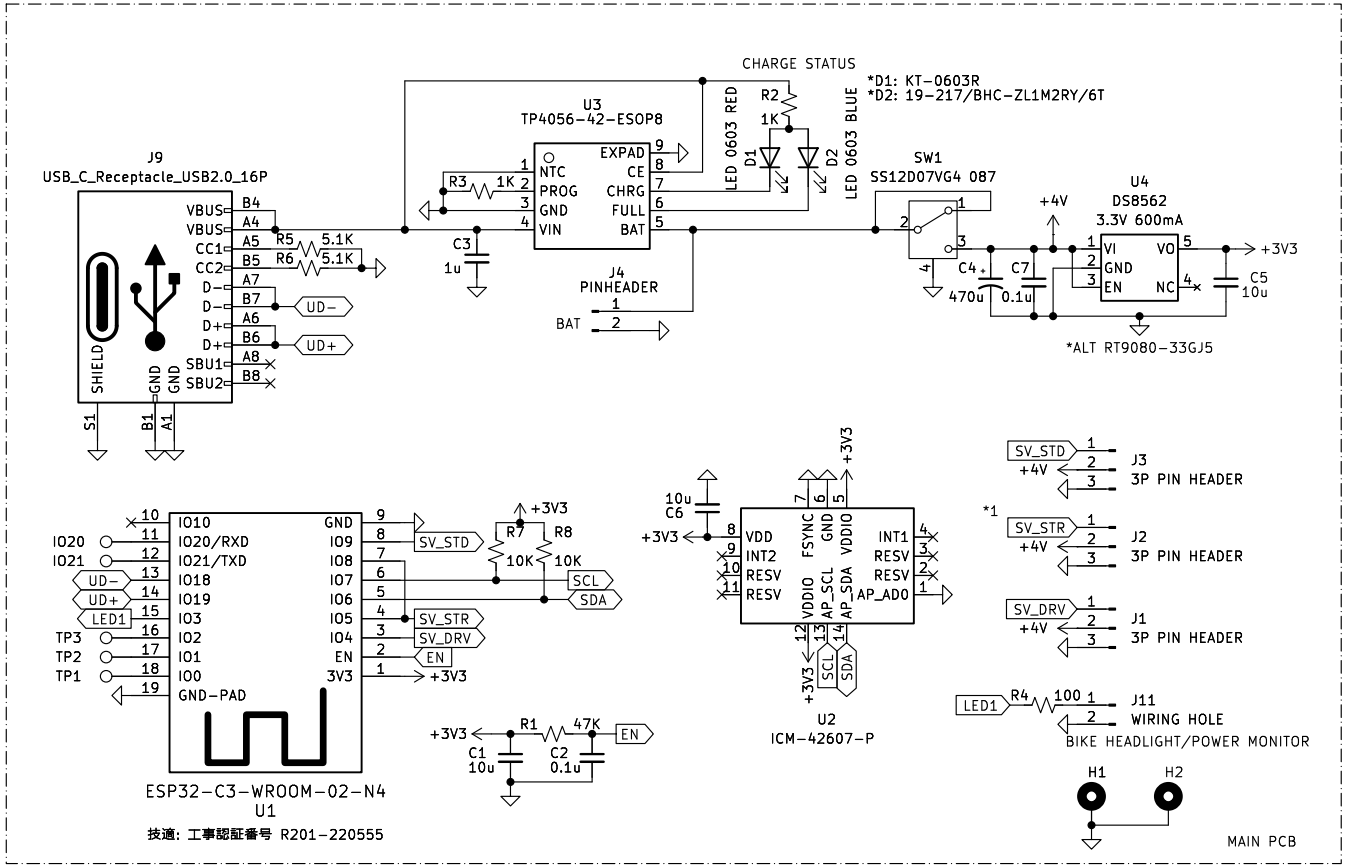

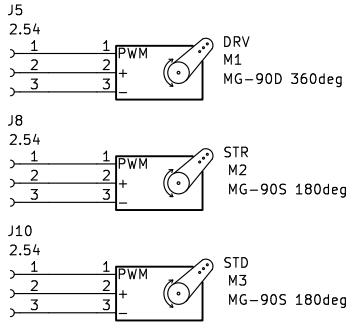

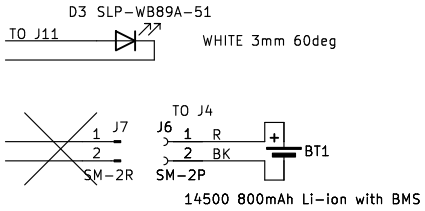

1. SLEEP CURRENT=16.8uA/6.0mA(NO SV./WITH SV.)
2. Battery 14500/800mAh
   energy dencity = 3.7V*0.8Ah/(3.14*1.4cm^2/4*5cm/1000mL/L)
   = 2.96Wh / 7.693mL = 385Wh/L < 400Wh/L PSE not needed.
3. Battery capacity measured = 500mAh at load = 5.1ohm
4. LED current = (3.3 - 2.56) / 100 = 7.4mA
5. MG-90S Minimum operation voltage = 3.1V(measured)
6. @3.8V Current = 95mA(WiFi connected)/ 600mA(str. locked)/
   215mA(rot. ON)/ 250mA(rot. + Oscillate str.)
7. @3.8V Deep sleep current = 5.8mA
8. Changed from 04: Add clearance between +4V and H2PAD.
9. CHG SW1

2025.12.20 CHG LED3
2026.01.11 CHG R7,R8 SHOULD BE 5.1K
2026.01.12 CHG R5,R6 REWORKED TO 5.1K
2026.01.16 ADD OPTION FOR AUTO PILOT

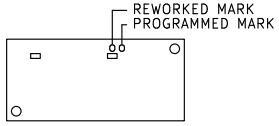

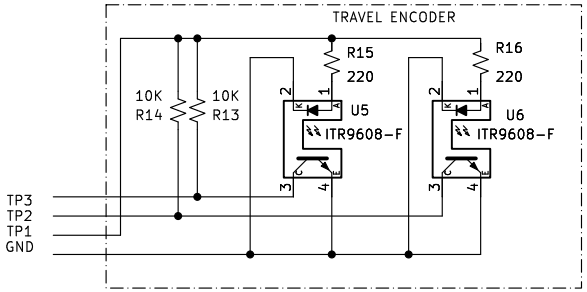

If=2.05V/220Ω=9.3mA(meas) x2

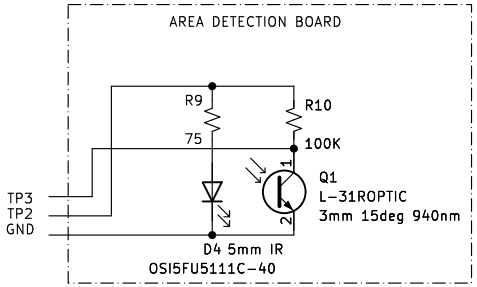

MAIN/SUB PCB : DOUBLE SIDED, FR-4, t=1.2mm

ROBOBIKEJP.COM

Sheet: /
File: ROBOBIKE05_PCBA.kicad_sch

Title: ROBOBIKE 05

Size: A4	Date: 2026-04-12	**Rev: 20251205**
KiCad E.D.A. 9.0.7		Id: 1/1