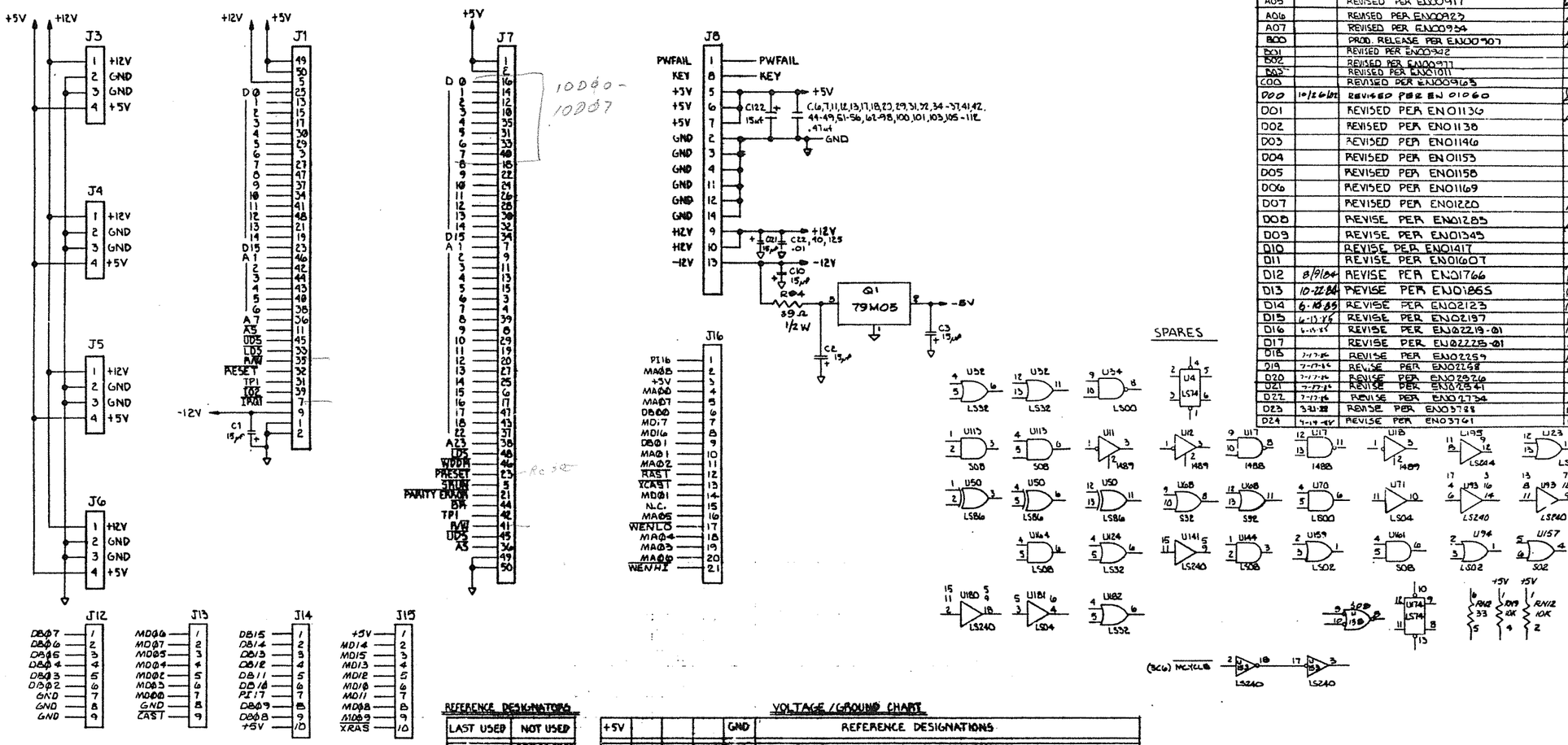

REVISIONS			
LTR	DATE	DESCRIPTION	APPR
A00		RELEASE PER EN00839	
A01		REVISED PER EN00879	
A02		REVISED PER EN00887	
A03		REVISED PER EN00891	
A04		REVISED PER EN00914	
A05		REVISED PER EN00917	
A06		REVISED PER EN00923	
A07		REVISED PER EN00934	
B00		PROD. RELEASE PER EN00907	
B01		REVISED PER EN00942	
B02		REVISED PER EN00977	
B03		REVISED PER EN01011	
C00		REVISED PER EN009965	
D00	10/26/84	REVISED PER EN 01060	
D01		REVISED PER EN01136	
D02		REVISED PER EN01138	
D03		REVISED PER EN01146	
D04		REVISED PER EN01153	
D05		REVISED PER EN01158	
D06		REVISED PER EN01169	
D07		REVISED PER EN01220	
D08		REVISE PER EN01285	
D09		REVISE PER EN01345	
D10		REVISE PER EN01417	
D11		REVISE PER EN01607	
D12	8/9/84	REVISE PER EN01766	
D13	10-22-84	REVISE PER EN01865	
D14	6-10-85	REVISE PER EN02123	
D15	6-13-85	REVISE PER EN02197	
D16	6-19-85	REVISE PER EN02219-01	
D17		REVISE PER EN02225-01	
D18	7-17-86	REVISE PER EN02259	
D19	7-17-86	REVISE PER EN02268	
D20	7-17-86	REVISE PER EN02276	
D21	7-17-86	REVISE PER EN02541	
D22	7-17-86	REVISE PER EN02734	
D23	3-21-88	REVISE PER EN03788	
D24	4-19-88	REVISE PER EN03761	
D25	9-13-88	REVISED PER EN040161	

DWL-00167-00

1 OF 1

5. INSTALLATION OPTIONAL.
4. I.C TYPE AT LOCATIONS U84 - U92, U102 - U110 (SHT 4) ARE P/N 41256.
3. COMPONENT NOT INSTALLED.
2. CAPACITOR VALUES ARE IN MICROFARADS ± 20% 50 VOLT.
1. RESISTOR VALUES ARE IN OHMS ± 5% 1/4 WATT.

NOTES: UNLESS OTHERWISE SPECIFIED

REFERENCE DESIGNATORS

LAST USED	NOT USED
U200	C25,55,3452
J16	57-61,126
P3	93,109
Q2	R2,3,47,71,
R87	72
C136	W1,2,3,16-19,
XY4	20
BT1	U193,
RN14	
CR10	
W23	
TP2	
	R18,59,60

VOLTAGE / GROUND CHART

+5V				GND	REFERENCE DESIGNATIONS
14				7	U1,2,3,4,5,10,11,12,16,17,18,19,22,23,26,31,32,34,35,41,45,47,50,51,52,53,54,55,56
					64,66,67,68,69,70,71,72,73,74,94,95,97,98,111,113,114,123,124,125,126,132,136,137
					138,139,144,146,147,148,152,157,158,159,160,161,164,165,166,167,169,174,
					175,176,181,182,183,187,188,189,190,193,194,198,199,200.
16				8	U20,21,30,33,38,42,57,58,59,96,99,112,115,116,120,127,130,131,140,145,149,168,170.
					171,186,191,196,197
20				10	U9,24,36,37,43,44,46,60,61,62,63,65,75,76,77,78,79,80,93,117,121,122,133.
					134,135,141,142,143,153,154,158,177,178,179,180,195

DO NOT SCALE DWG

ALL DIMS IN INCHES
TOLERANCES
X ± .1
XX ± .03
XXX ± .010
ANGLES ± 2°
UNLESS OTHERWISE SPECIFIED
SURFACE

NEXT ASSY | USED ON
APPLICATION

DWN M. Burlington 5/20/82
CHK R. Bailey 5-20-82
ENG 7-8-82
APPD
APPD

THIS DOCUMENT CONTAINS PROPRIETARY INFORMATION AND SUCH INFORMATION MAY NOT BE REPRODUCED OR DISCLOSED TO OTHERS FOR ANY PURPOSE OR USED TO PRODUCE THE ARTICLE OR SUBJECT, WITHOUT WRITTEN PERMISSION FROM ALPHA MICRO

alpha micro

TITLE
LOGICS, CPU BOARD, AM-1600

SCALE —/—
WEIGHT —/—
DWG D
SIZE
DWG NO. DWL-00167-00
REV D25
SHEET 1 OF 13

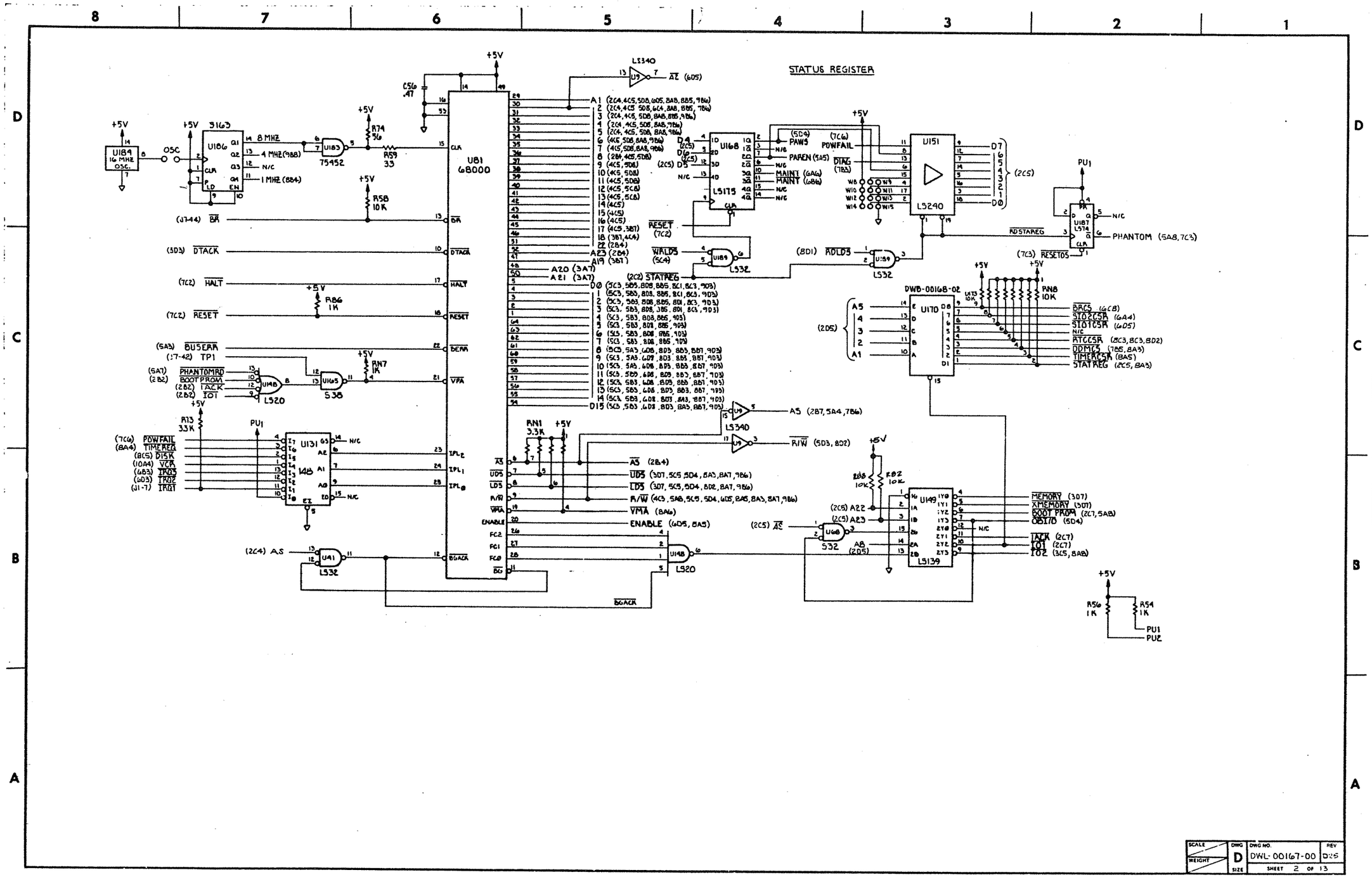

DWL-00167-00
Sht 3

SCALE	DWG	DWG NO.	REV
WEIGHT	D	DWL-00167-00	D25
	SIZE	SHEET 2 OF 13	

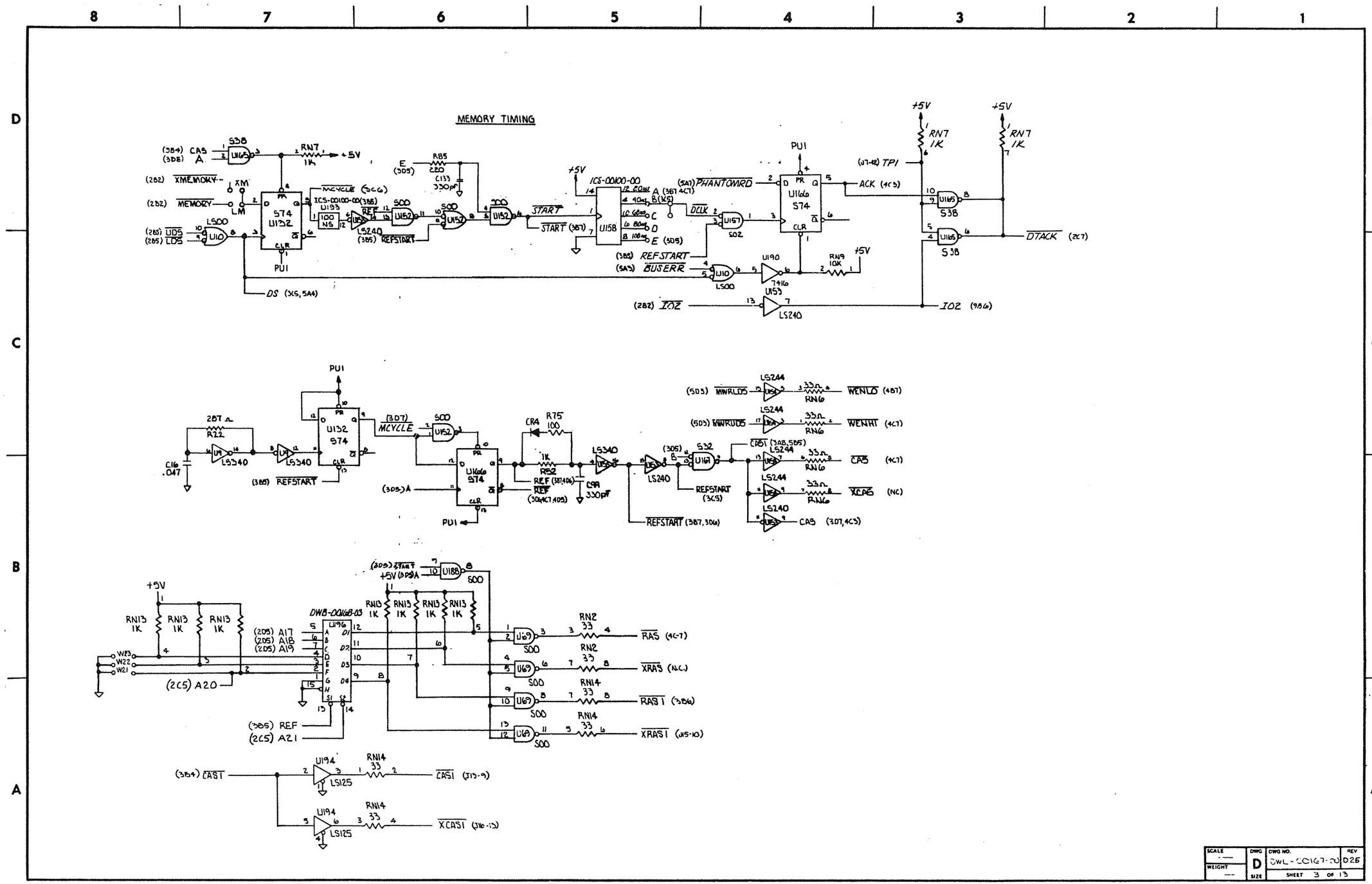

SCALE	DWG	DWG NO.	REV
—	D	DWL-00167-00	D26
WEIGHT —	SIZE	SHEET 3 OF 13	

DWL-00167-00
SHT 3

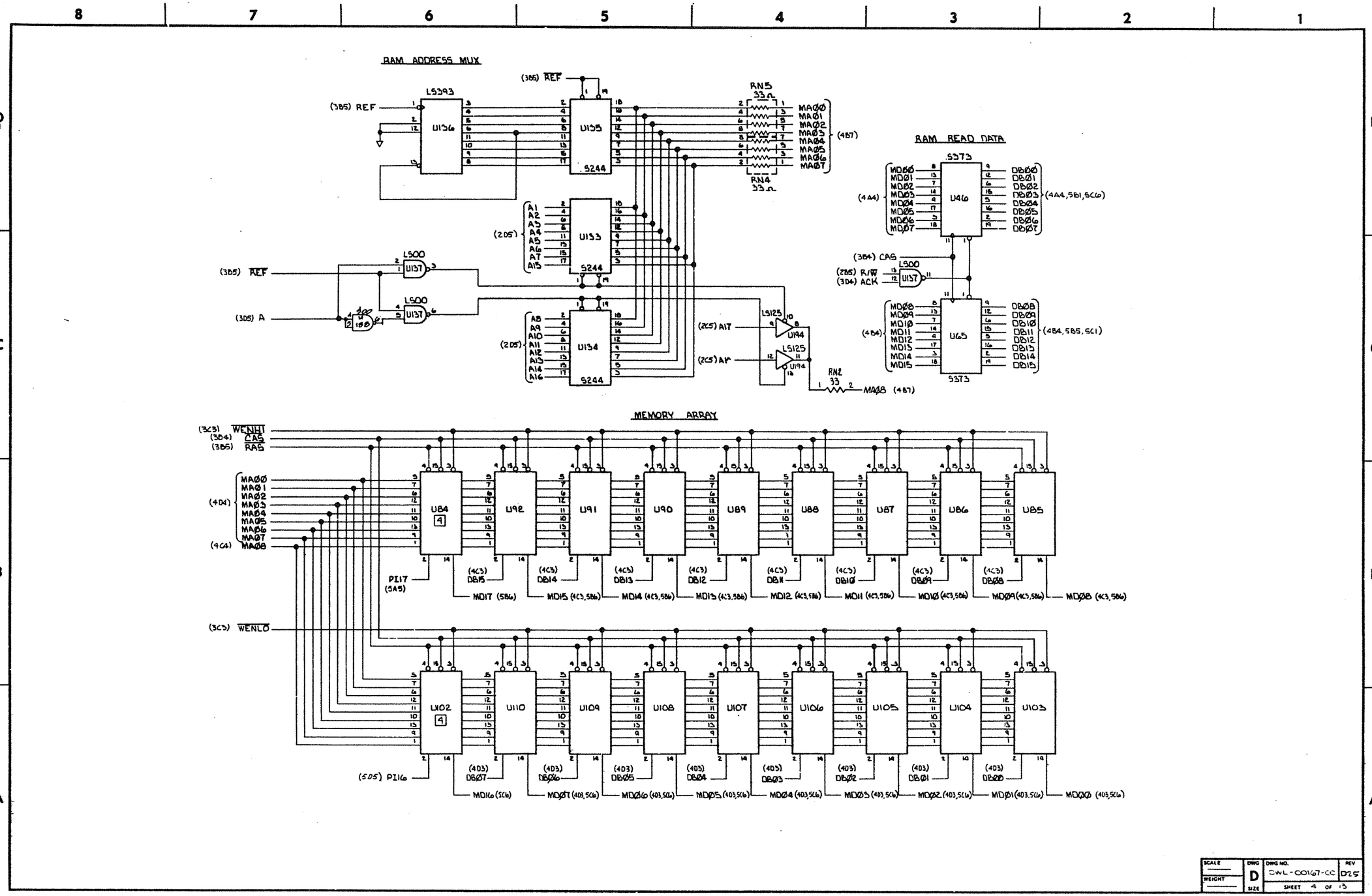
RAM ADDRESS MUX
RAM READ DATA
MEMORY ARRAY
LS393
U136
U135
U133
U134
S244
RN5 33Ω
RN4 33Ω
RN2 33
U137
U194
LS125
U46
U65
S373
U84
U92
U91
U90
U89
U88
U87
U86
U85
U102
U110
U109
U108
U107
U106
U105
U104
U103
(385) REF
(385) A
(205) A17
(205) A18
(487) MA00
(487) MA01
(487) MA02
(487) MA03
(487) MA04
(487) MA05
(487) MA06
(487) MA07
(444) MD00
(444) MD01
(444) MD02
(444) MD03
(444) MD04
(444) MD05
(444) MD06
(444) MD07
(444,561,506) DB00
(444,561,506) DB01
(444,561,506) DB02
(444,561,506) DB03
(444,561,506) DB04
(444,561,506) DB05
(444,561,506) DB06
(444,561,506) DB07
(384) CAS
(285) R/W
(304) ACK
(484) MD08
(484) MD09
(484) MD10
(484) MD11
(484) MD12
(484) MD13
(484) MD14
(484) MD15
(484,585,501) DB08
(484,585,501) DB09
(484,585,501) DB10
(484,585,501) DB11
(484,585,501) DB12
(484,585,501) DB13
(484,585,501) DB14
(484,585,501) DB15
(363) WENHI
(304) CAS
(305) RAS
(404) MA00
(404) MA01
(404) MA02
(404) MA03
(404) MA04
(404) MA05
(404) MA06
(404) MA07
(406) MA08
(363) WENLO
PI17 (505)
(505) PI16
(403) DB00
(403) DB01
(403) DB02
(403) DB03
(403) DB04
(403) DB05
(403) DB06
(403) DB07
(403) DB08
(403) DB09
(403) DB10
(403) DB11
(403) DB12
(403) DB13
(403) DB14
(403) DB15
MD00 (403,506)
MD01 (403,506)
MD02 (403,506)
MD03 (403,506)
MD04 (403,506)
MD05 (403,506)
MD06 (403,506)
MD07 (403,506)
MD08 (403,506)
MD09 (403,506)
MD10 (403,506)
MD11 (403,506)
MD12 (403,506)
MD13 (403,506)
MD14 (403,506)
MD15 (403,506)
MD16 (506)
MD17 (506)
SCALE
WEIGHT
DWG D SIZE
DWG NO. CWL-00167-CC
REV D25
SHEET 4 OF 13

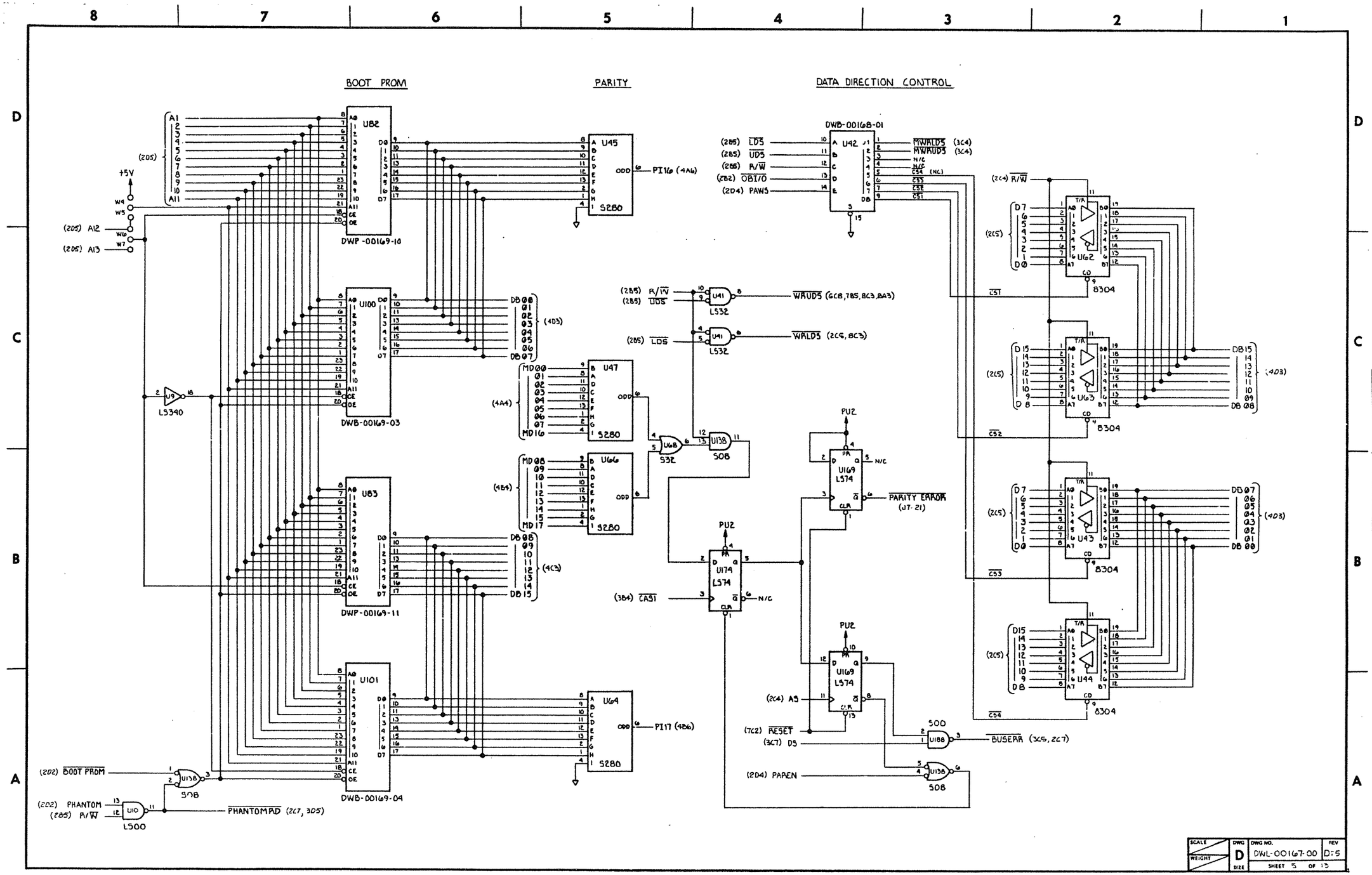

SCALE	DWG	DWG NO.	REV
WEIGHT	D	DWL-00167-00	D:5
	SIZE	SHEET 5 OF 13	

DWL-00167-00
SHT 5

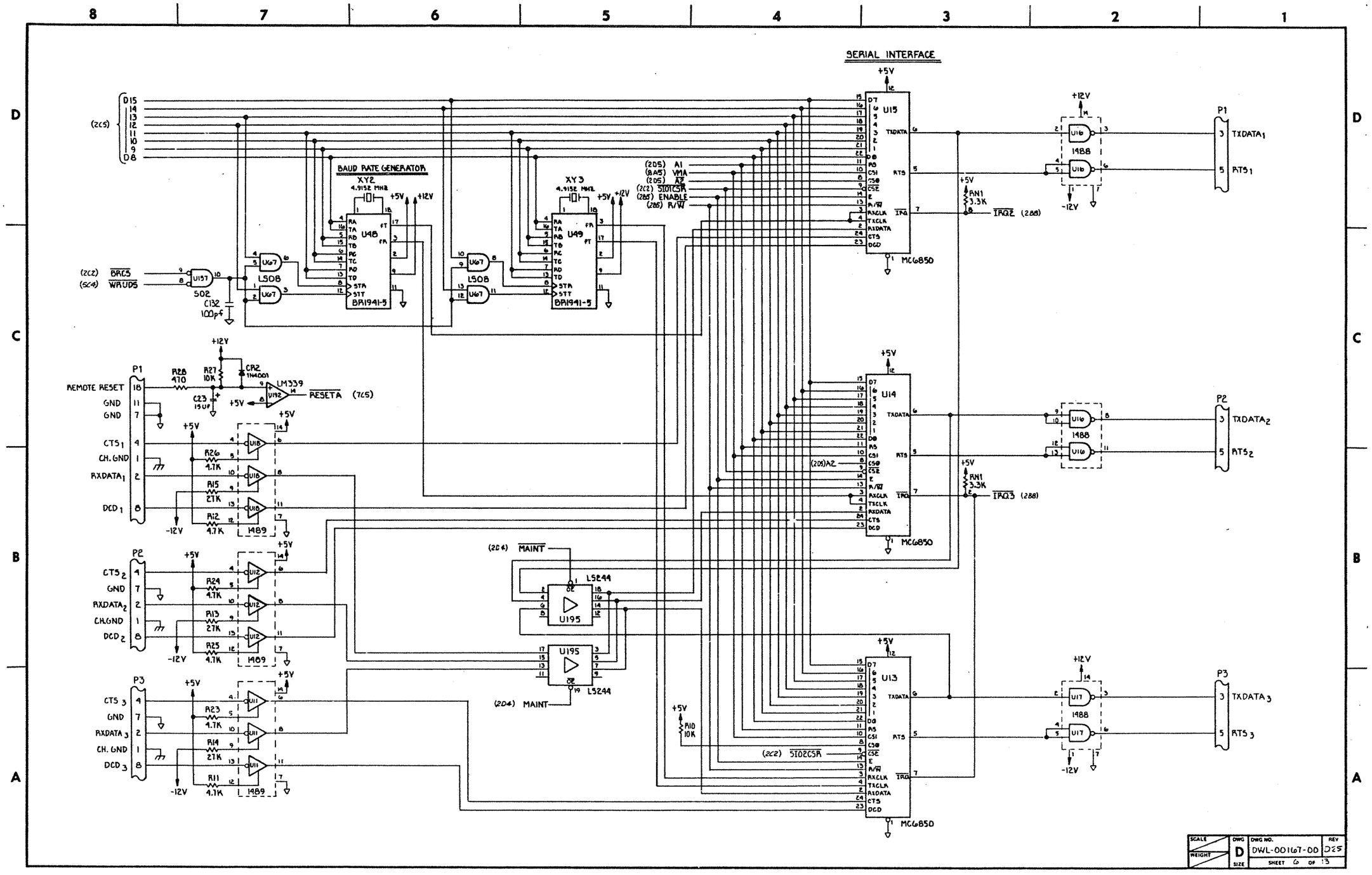

SCALE	DWG	DWG NO.	REV
WEIGHT	D	DWL-001167-00	D25
	SIZE	SHEET 6 OF 13	

DWL-001167-00 sht 6

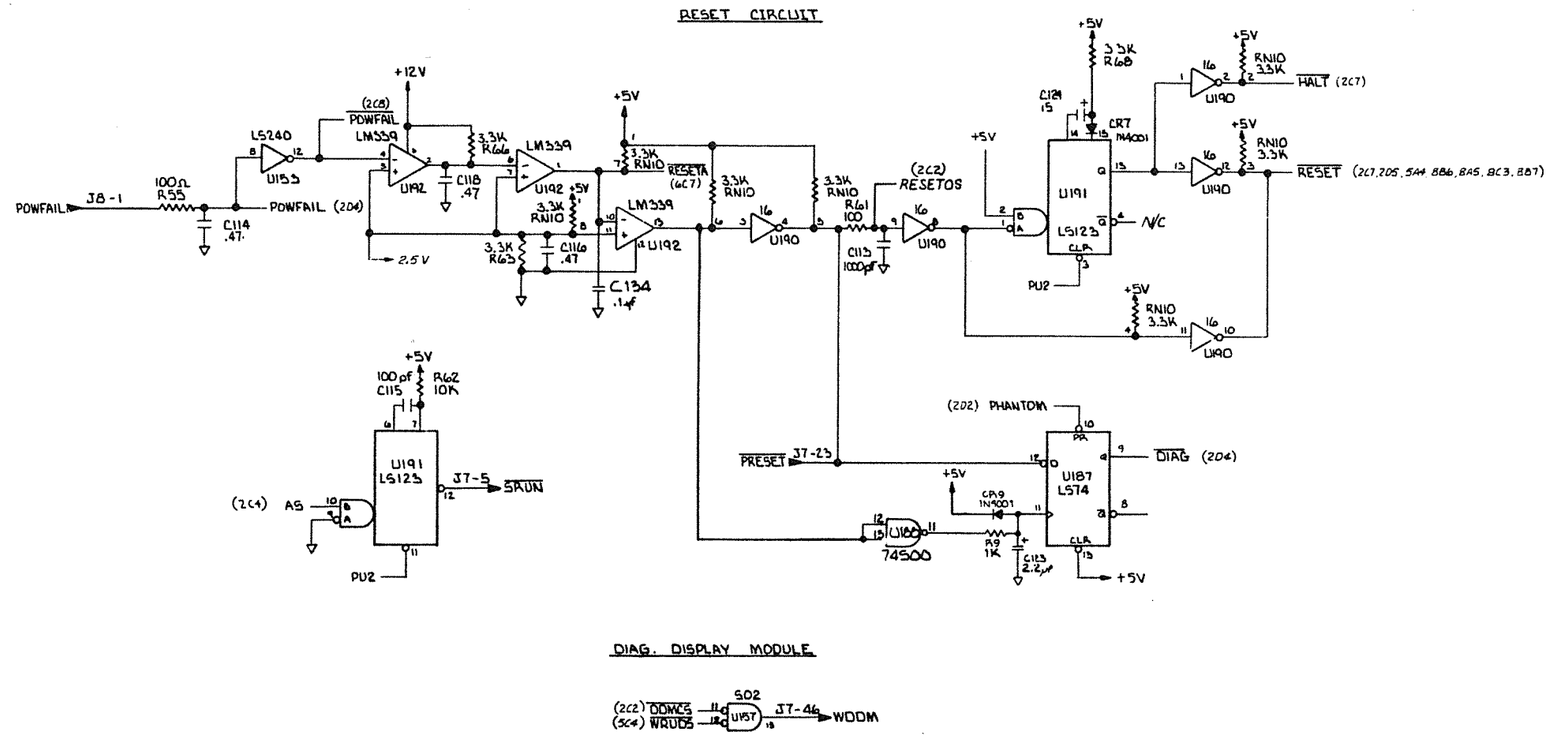

DWG-00167-00
SH 7

SCALE	DWG	DWG NO.	REV
WEIGHT	D	DWG-00167-00	D25
	SIZE	SHEET 7 OF 13	

ATN missing on UK

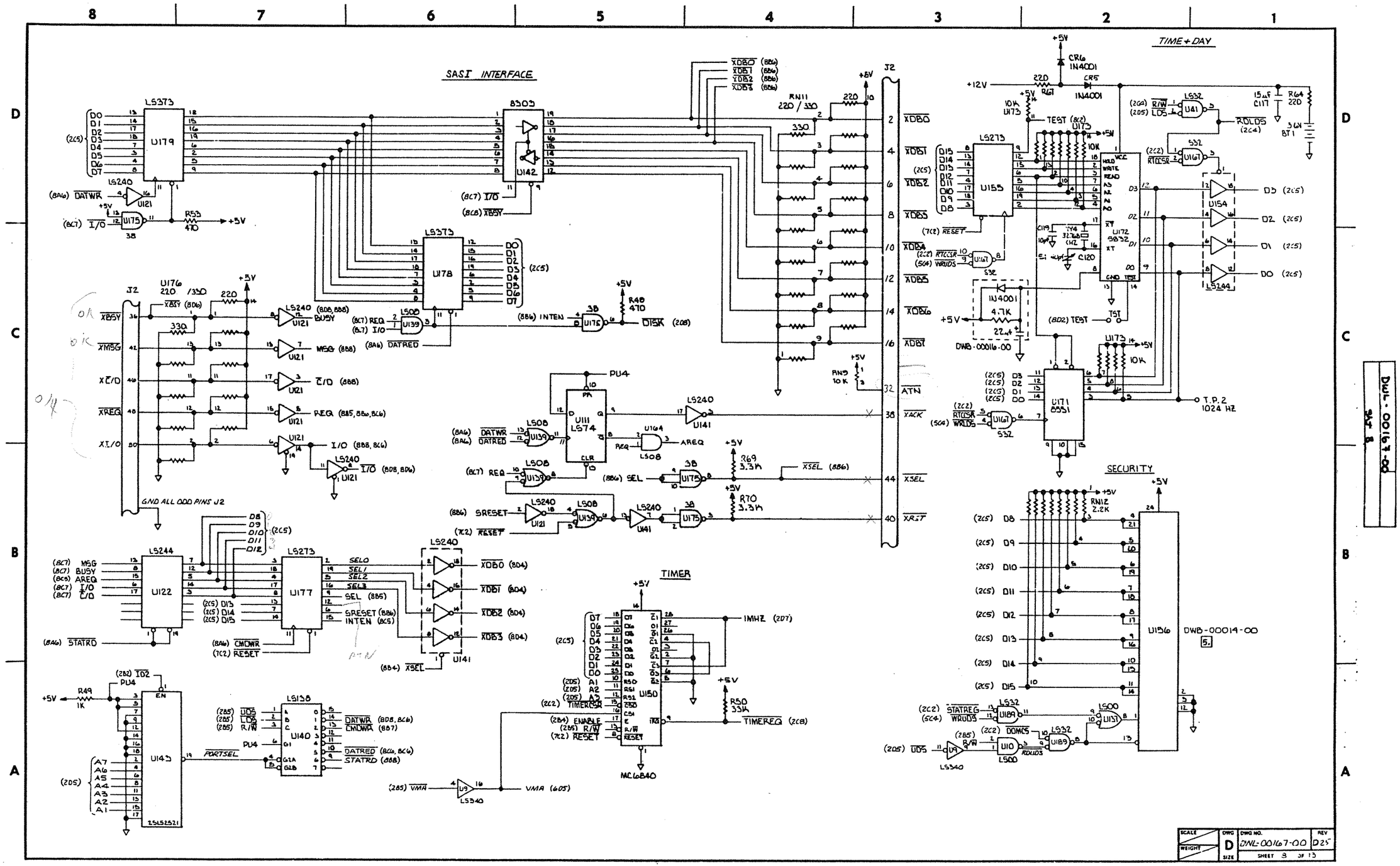

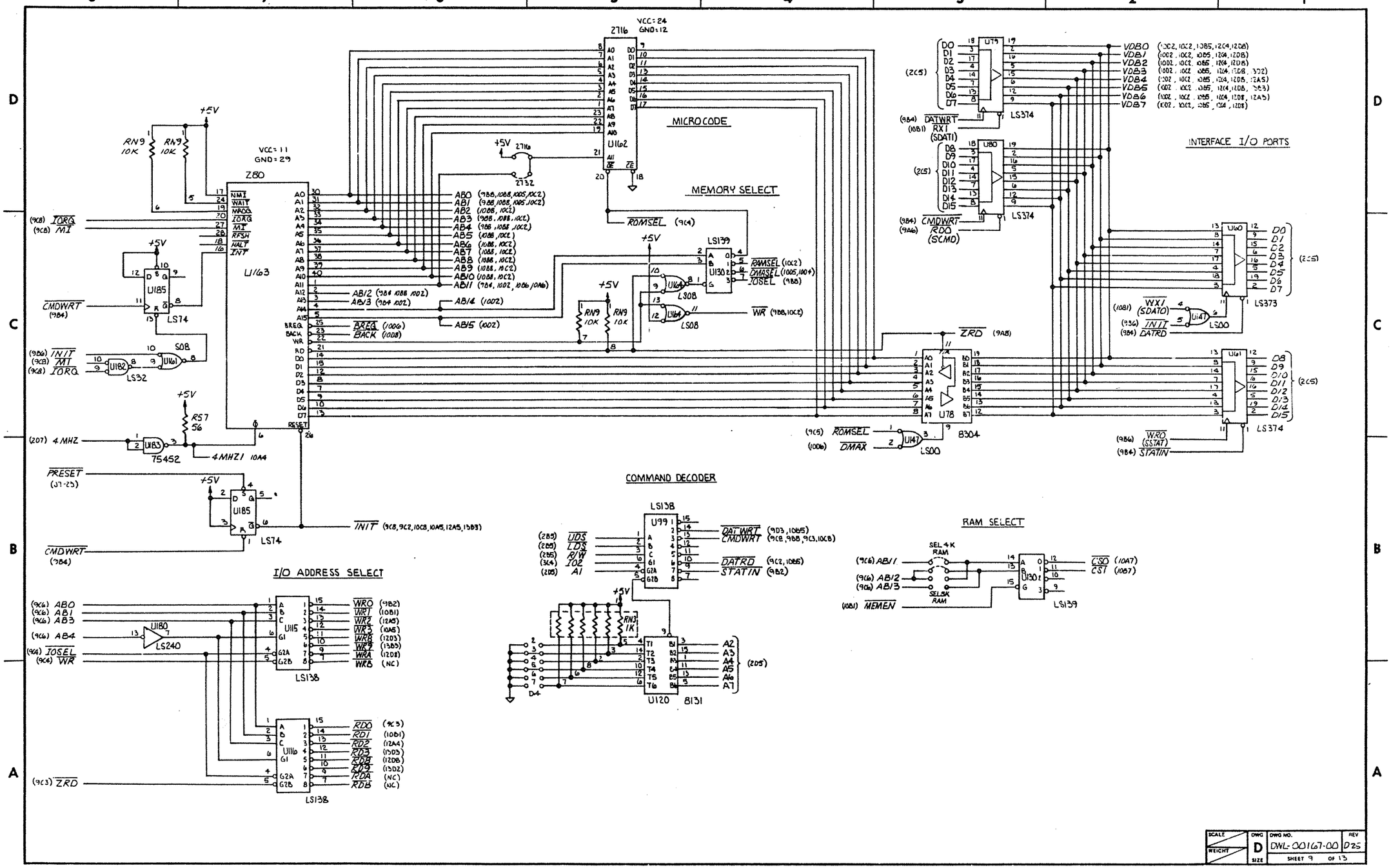
MICROCODE
MEMORY SELECT
INTERFACE I/O PORTS
COMMAND DECODER
I/O ADDRESS SELECT
RAM SELECT
Z80
U163
2716
U162
LS139
U130
LS374
U79
U80
LS373
U60
U61
U78
8304
LS00
U147
U164
LS08
U185
LS74
U182
LS32
U183
75452
4MHZ1 10A4
LS138
U115
U116
U180
LS240
U99
U120
8131
LS139
U130
SEL 4K RAM
SEL 8K RAM
VCC=24
GND=12
VCC=11
GND=29
+5V
RN9 10K
R57 56
RN3 1K
ROMSEL (9C4)
ROMSEL (10C2)
DMASEL (1005,1004)
IOSEL (9B8)
WR (9B8,10C2)
ZRD (9A8)
ROMSEL (9C5)
DMAX (1006)
DATWRT (10B1)
RXI (SDATI)
CMDWRT (9A6)
RDO (SCMD)
WXI (SDATO)
INIT (9B6)
DATRD (9B4)
WRO (SSTAT)
STATIN (9B4)
IORQ (9C8)
MI (9C8)
CMDWRT (9B4)
INIT (9B6)
MI (9C8)
IORQ (9C8)
4MHZ (207)
PRESET (J7-23)
INIT (9C8,9C2,10C8,10A5,12A5,13B3)
CMDWRT (9B4)
AB12 (9B4 10B8 10C2)
AB13 (9B4 10C2)
AB14 (10C2)
AB15 (10C2)
BREQ (1006)
BACK (1008)
DAT WRT (9D3,10B5)
CMDWRT (9C8,9B8,9C3,10C8)
DATRD (9C2,10B5)
STATIN (9B2)
UDS (28B)
LDS (28B)
R/W (28B)
IO2 (3C4)
A1 (20B)
CSO (10A7)
CS1 (10B7)
MEMEN (10B1)
WRO (9B2)
WR1 (10B1)
WR2 (12A5)
WR3 (10A5)
WR4 (12D3)
WR5 (13D3)
WR6 (12D8)
WR7 (13D2)
RDO (9C3)
RD1 (10B1)
RD2 (12A4)
RD3 (15D3)
RD4 (12D8)
RD5 (13D2)
RD6 (NC)
RD7 (NC)
ZRD (9C3)
DWL-00167-00
SHEET 9 OF 13
D
D25

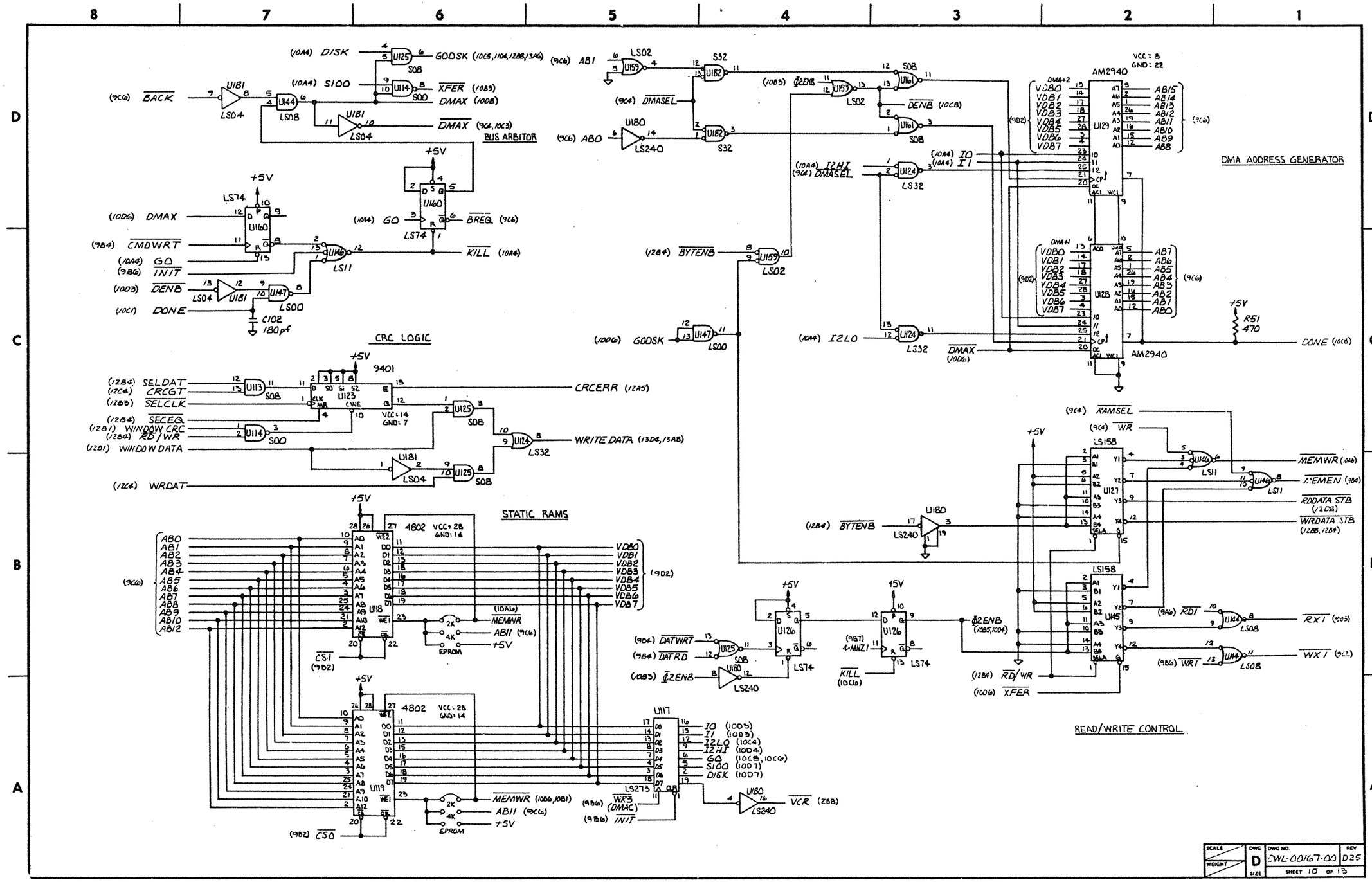
BUS ARBITOR
DMA ADDRESS GENERATOR
CRC LOGIC
STATIC RAMS
READ/WRITE CONTROL
AM2940
4802
9401
LS158
LS273
DWG NO. CWL-00167-00
REV D25
SHEET 10 OF 13

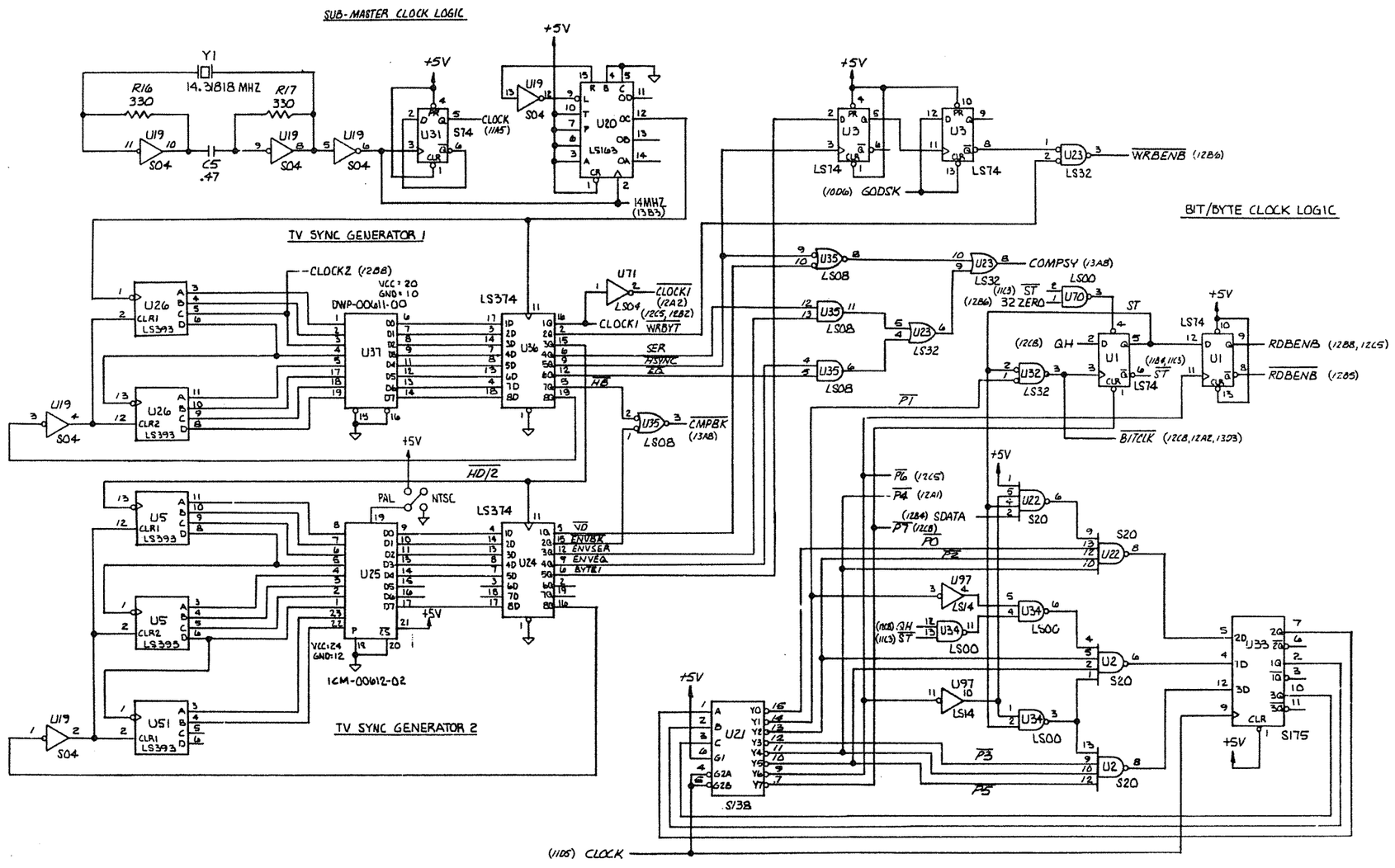

STATE SEQUENCER

SCALE	DWG	DWG NO.	REV
WEIGHT	D	DWL-00167-00	D25
	SIZE	SHEET 11 OF 13	

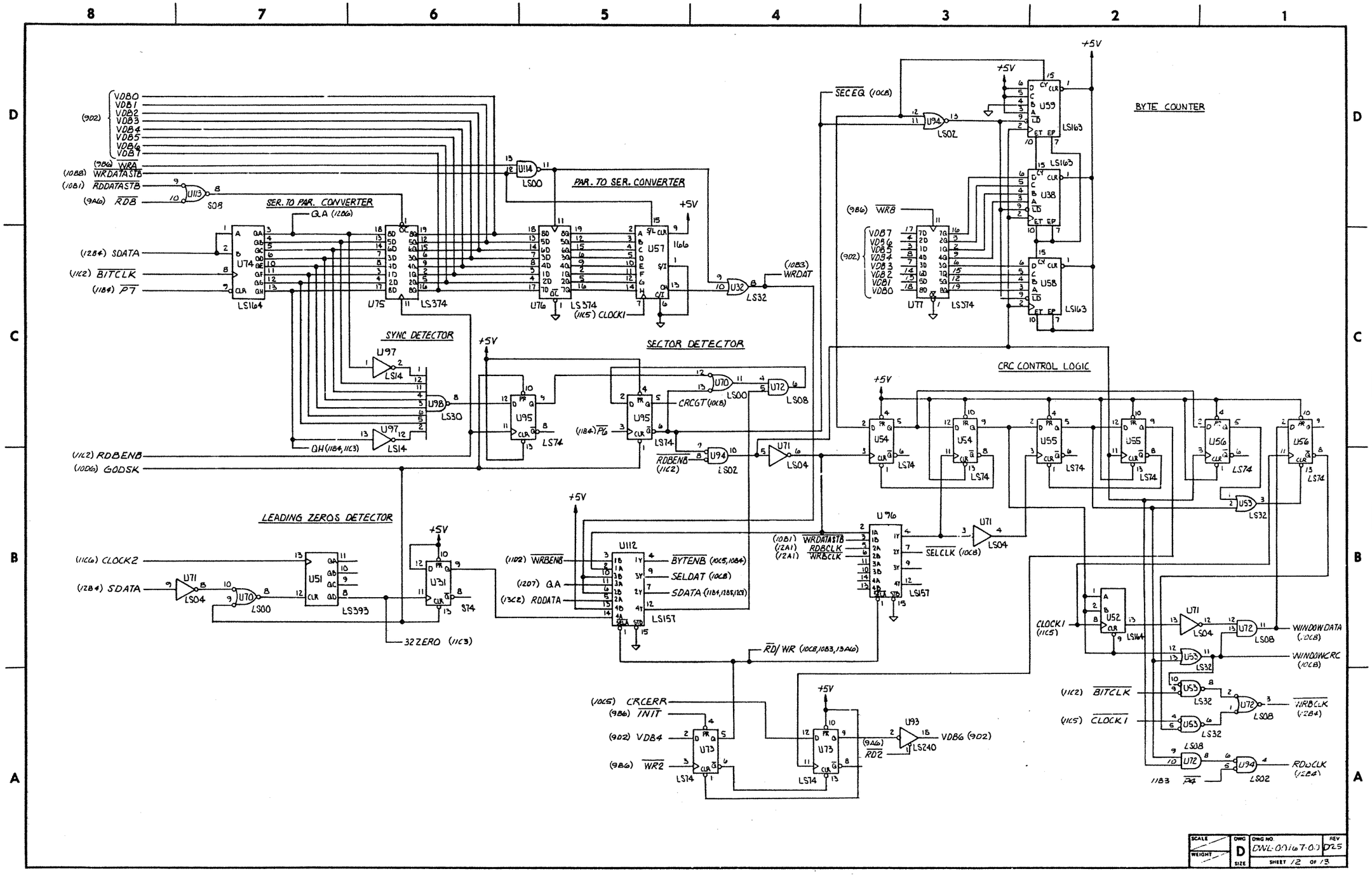
BYTE COUNTER
SER. TO PAR. CONVERTER
PAR. TO SER. CONVERTER
SYNC DETECTOR
SECTOR DETECTOR
CRC CONTROL LOGIC
LEADING ZEROS DETECTOR
(902) VDB0 VDB1 VDB2 VDB3 VDB4 VDB5 VDB6 VDB7
(9B6) WRB
(10B8) WRDATASTB
(10B1) RDDATASTB
(9A6) RDB
(12B4) SDATA
(11C2) BITCLK
(11B4) P7
(11C2) RDBENB
(10D6) GODSK
(11C6) CLOCK2
(12B4) SDATA
(11D2) WRBENB
(12D7) Q.A
(13C2) RDDATA
(10C5) CRCERR
(9B6) INIT
(9D2) VDB4
(9B6) WR2
(10B3) WRDAT
SECEQ (10C8)
CRCGT (10C8)
RDBENB (11C2)
BYTENB (10C5,10B4)
SELDAT (10C8)
SDATA (11B4,12B5,12D7)
SELCLK (10C8)
WRDATASTB (10B1)
RDBCLK (12A1)
WRBCLK (12A1)
RD/WR (10C8,10B3,13A6)
CLOCK1 (11C5)
WINDOWDATA (10C8)
WINDOWCRC (10C8)
WRBCLK (12B4)
RDBCLK (12B4)
VDB6 (9D2)
32ZERO (11C3)
+5V
DWL-00167-00
SHEET 12

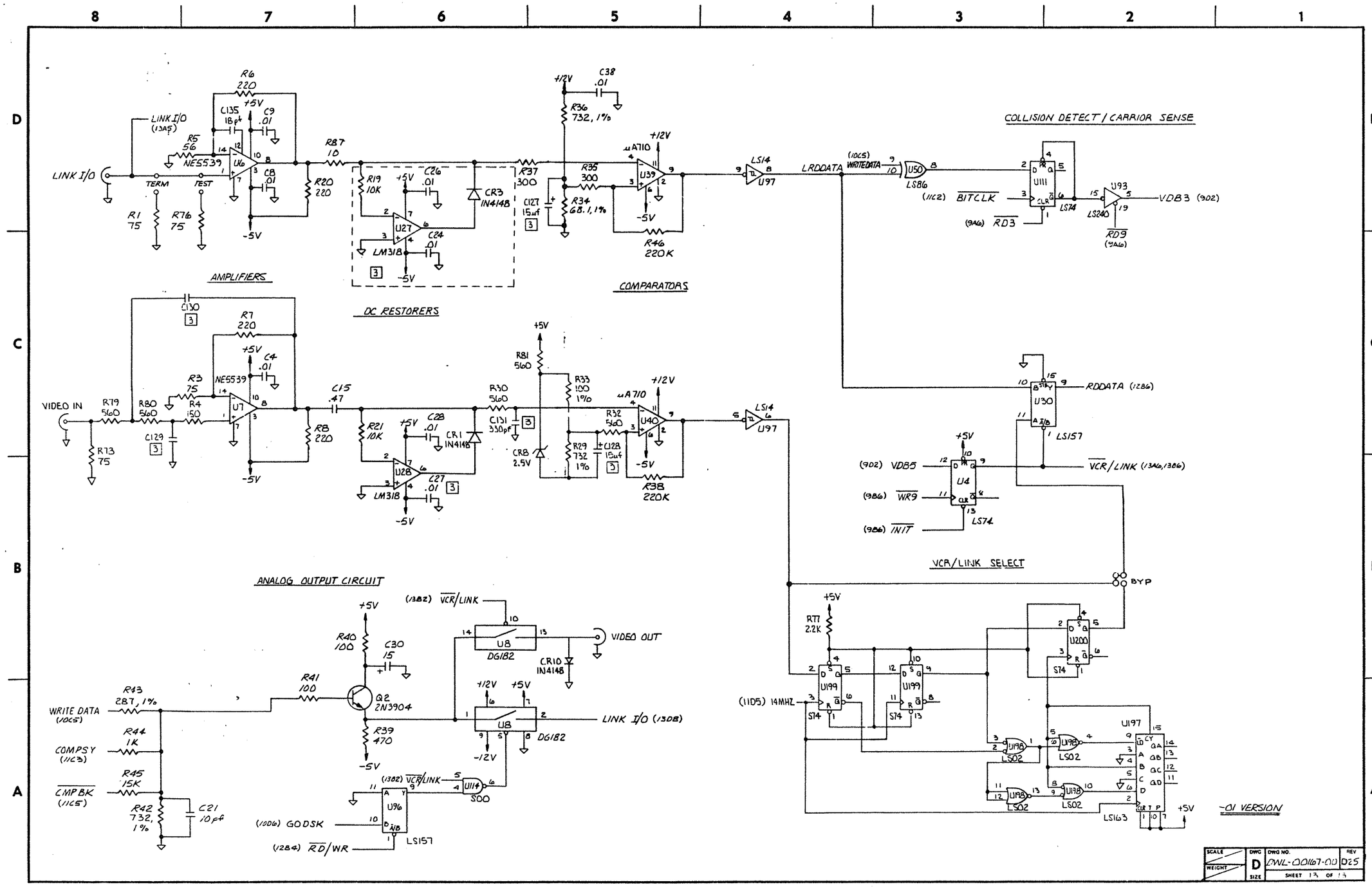

DWL-00167-00

Sht 13

SCALE	DWG	DWG NO.	REV
WEIGHT	D	DWL-00167-00	D25
	SIZE	SHEET 13 OF 13	