REVISIONS			
REV	DESCRIPTION	DATE	APPROV
A00	RELEASE PER EN02679	04/08/86	
A06	REVISED PER EN02782	07/03/86	
A07	REVISED PER EN03008	09/08/86	
A08	REVISED PER EN03032	09/16/86	
A09	REVISED PER EN03114	11/03/86	
A10	REVISED PER EN03164	1/16/87	RPL
A11	REVISED PER EN03227	1/16/87	RPL
A12	REVISED PER EN03230	1/16/87	RPL
A13	REVISED PER EN03250	2/6/87	RPL
A14	REVISED PER EN03291	4-3-87	[illegible]
A15	REVISED PER EN03424	6-5-87	[illegible]
A16	REVISED PER EN03460	7-13-87	RPL
B00	REVISED PER EN03492	9-24-87	RPL
B01	REVISED PER EN03615	1-21-88	RPL
B02	REVISED PER EN03660	1-21-88	RPL
B03/A18	REVISED PER EN03788	3-21-88	RPL

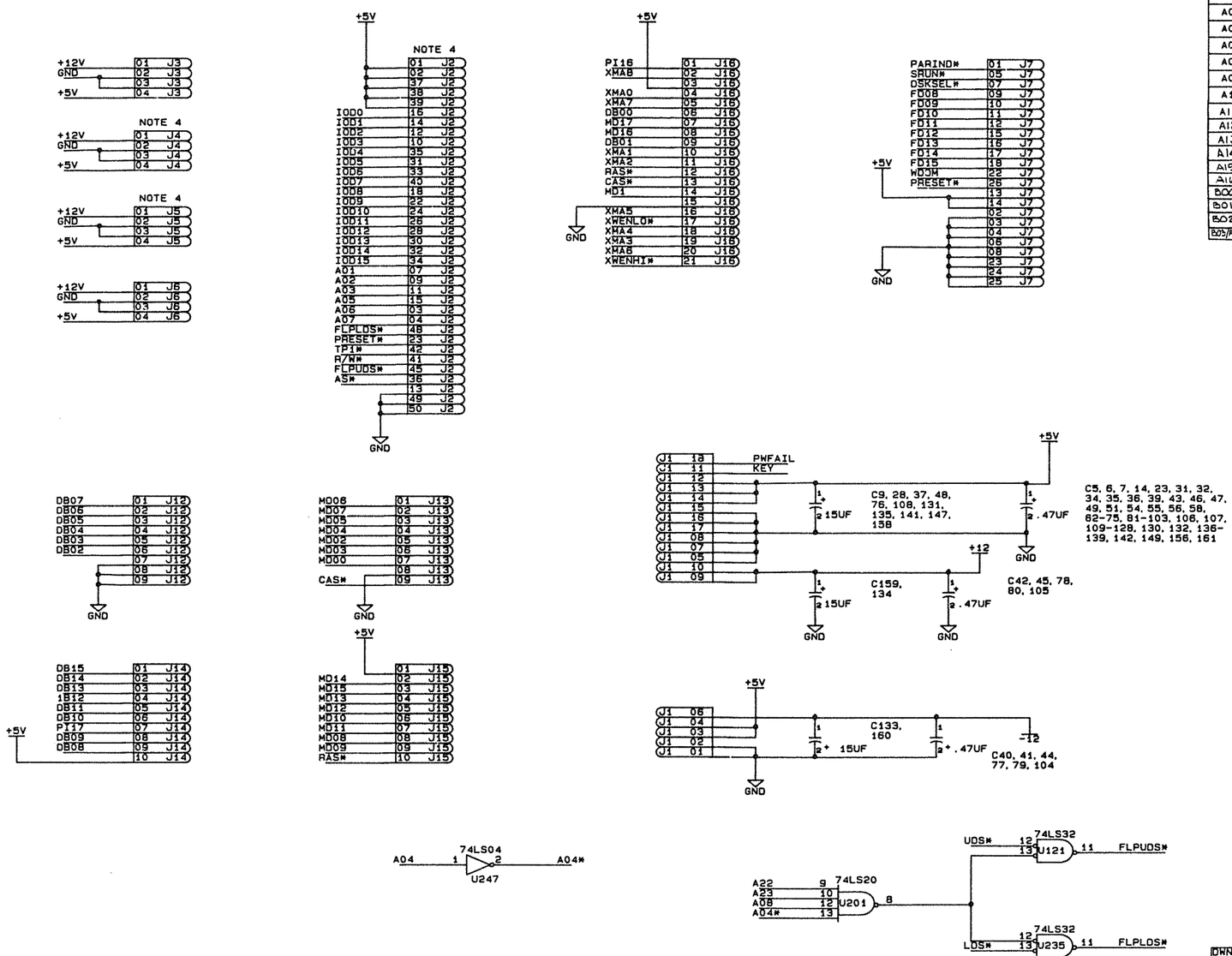

NOTES: UNLESS OTHERWISE SPECIFIED.
1. RESISTOR VALUES ARE IN OHMS, +/- 5%, 1/4W.
2. CAPACITOR VALUES ARE IN MICROFARADS +/- 20%, 50V.
3. NOT INSTALLED.
4. NOT INSTALLED -00.
5. INSTALLATION OPTIONAL.

REF. DES.	LAST USED
U252	CR7
R116	XY4
	Q3
RN21	F1
C164	

DWN P. ELLIOT Dec.86
CHK
APPD

alpha micro

TITLE
SCHEMATIC,
AM-177, AM 1200 CPU BOARD

SIZE D | NUMBER DWL-00177-00 | REV B03

SHEET 1 OF 15

DWL-00177-00
SHT 1 of 15

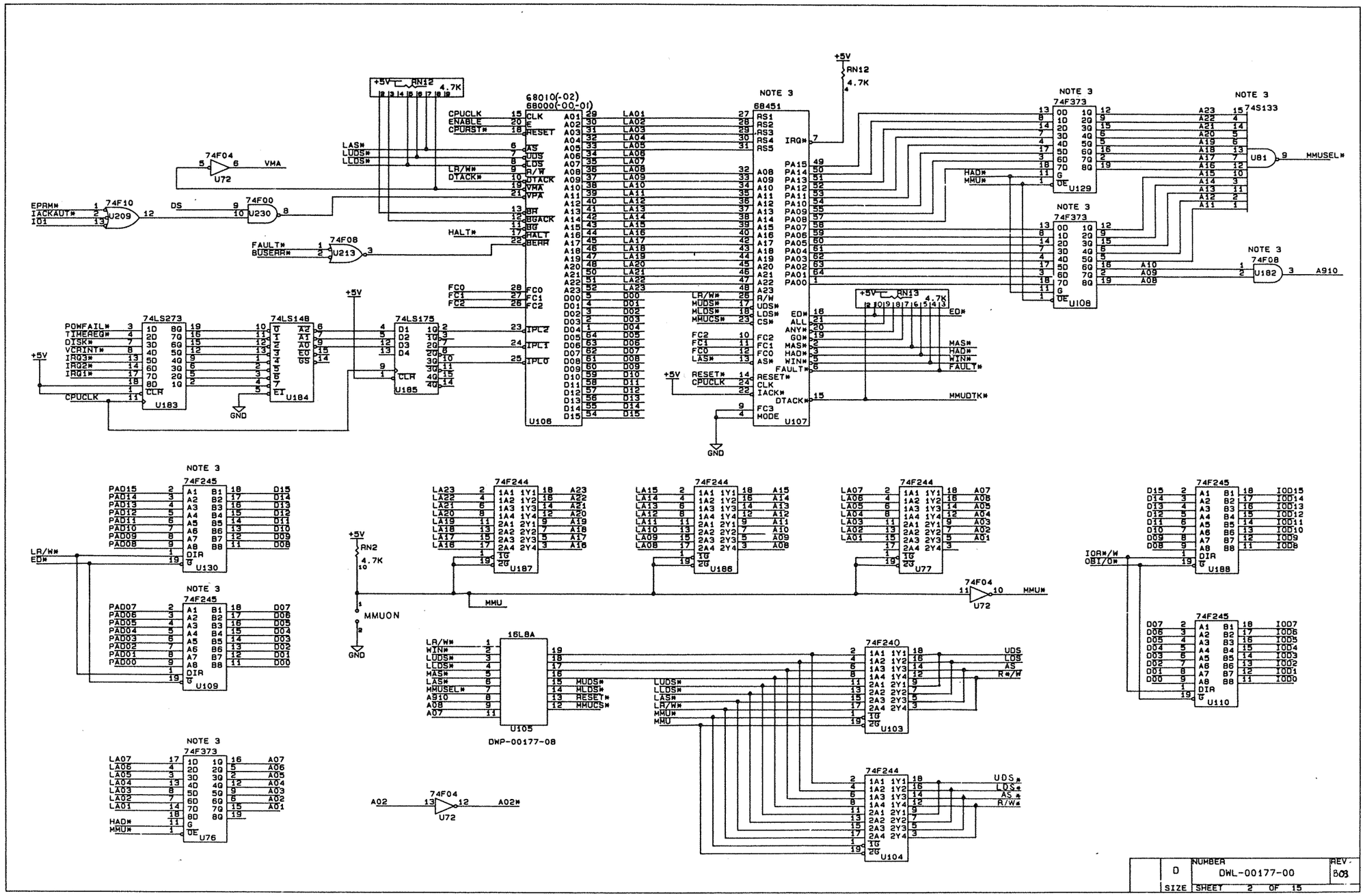

D	NUMBER DWL-00177-00		REV. B03
SIZE	SHEET 2 OF 15		

DWL-00177-00
SHEET 2 OF 15

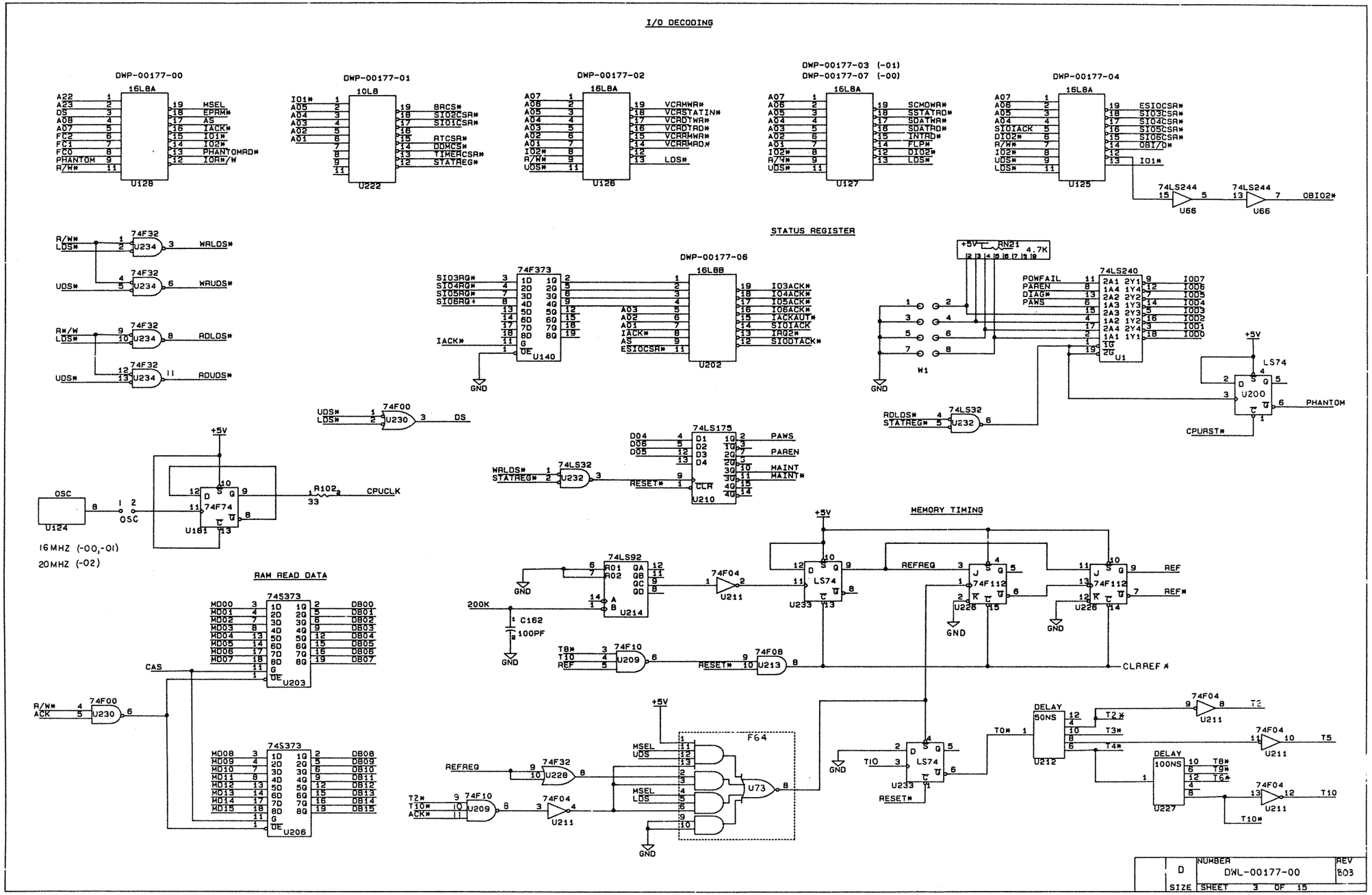
I/O DECODING
DWP-00177-00
16L8A
U128
A22 A23 DS A08 A07 FC2 FC1 FC0 PHANTOM R/W*
MSEL EPRM* AS IACK* IO1* IO2* PHANTOMRD* IOR*/W
DWP-00177-01
10L8
U222
IO1* A05 A04 A03 A02 A01
BRCS* SIO2CSR* SIO1CSR* RTCSR* DDMCS* TIMERCSR* STATREG*
DWP-00177-02
16L8A
U128
A07 A06 A05 A04 A03 A02 A01 IO2* R/W* UDS*
VCRMWR* VCRSTATIN* VCRDTWR* VCRDTRD* VCRRMWR* VCRRMRD* LDS*
DWP-00177-03 (-01)
DWP-00177-07 (-00)
16L8A
U127
SCMDWR* SSTATRD* SDATWR* SDATRD* INTRD* FLP* DIO2* LDS*
DWP-00177-04
16L8A
U125
ESIOCSR* SIO3CSR* SIO4CSR* SIO5CSR* SIO6CSR* OBI/D* IO1*
74LS244 U66
OBIO2*
R/W* LDS* 74F32 U234 WRLDS*
UDS* 74F32 U234 WRUDS*
R*/W LDS* 74F32 U234 RDLDS*
UDS* 74F32 U234 RDUDS*
STATUS REGISTER
74F373 U140
SIO3RQ* SIO4RQ* SIO5RQ* SIO6RQ* IACK*
GND
DWP-00177-06
16L8B
U202
A03 A02 A01 IACK* AS ESIOCSR*
IO3ACK* IO4ACK* IO5ACK* IO6ACK* IACKAUT* SIO1ACK IRQ2* SIODTACK*
+5V RN21 4.7K
W1
74LS240 U1
POWFAIL PAREN DIAG* PAWS
IOD7 IOD6 IOD5 IOD4 IOD3 IOD2 IOD1 IOD0
LS74 U200
PHANTOM
CPURST*
RDLDS* STATREG* 74LS32 U232
UDS* LDS* 74F00 U230 DS
74LS175 U210
D04 D06 D05
PAWS PAREN MAINT MAINT*
WRLDS* STATREG* 74LS32 U232
RESET* CLR
+5V
OSC U124
OSC
16MHZ (-00,-01)
20MHZ (-02)
74F74 U181
R102 33 CPUCLK
RAM READ DATA
74S373 U203
MD00 MD01 MD02 MD03 MD04 MD05 MD06 MD07
DB00 DB01 DB02 DB03 DB04 DB05 DB06 DB07
CAS
R/W* ACK 74F00 U230
74S373 U206
MD08 MD09 MD10 MD11 MD12 MD13 MD14 MD15
DB08 DB09 DB10 DB11 DB12 DB13 DB14 DB15
MEMORY TIMING
74LS92 U214
R01 R02 QA QB QC QD
200K C162 100PF
74F04 U211
LS74 U233
REFREQ 74F112 U228
REF REF*
T8* T10 REF 74F10 U209
RESET* 74F08 U213
CLRREF*
REFREQ 74F32 U228
T2* T10* ACK* 74F10 U209
74F04 U211
MSEL UDS MSEL LDS F64 U73
T0* T10 LS74 U233 RESET*
DELAY 50NS U212
T2* T3* T4*
DELAY 100NS U227
T8* T9* T6*
T10*
74F04 U211
T2 T5 T10
D NUMBER DWL-00177-00 REV 803
SIZE SHEET 3 OF 15

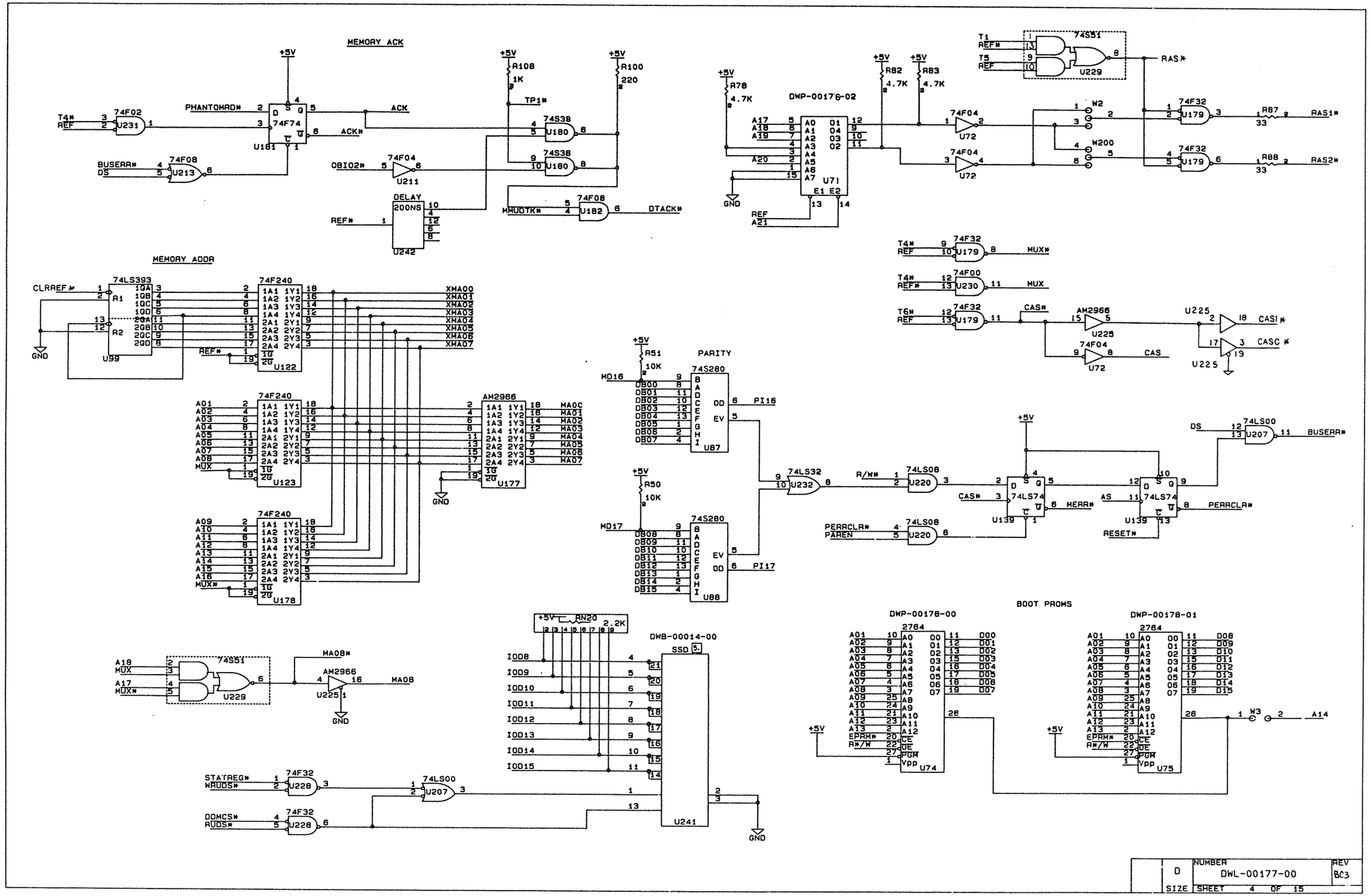

SIZE	D	NUMBER DWL-00177-00	REV BC3
	SHEET 4 OF 15		

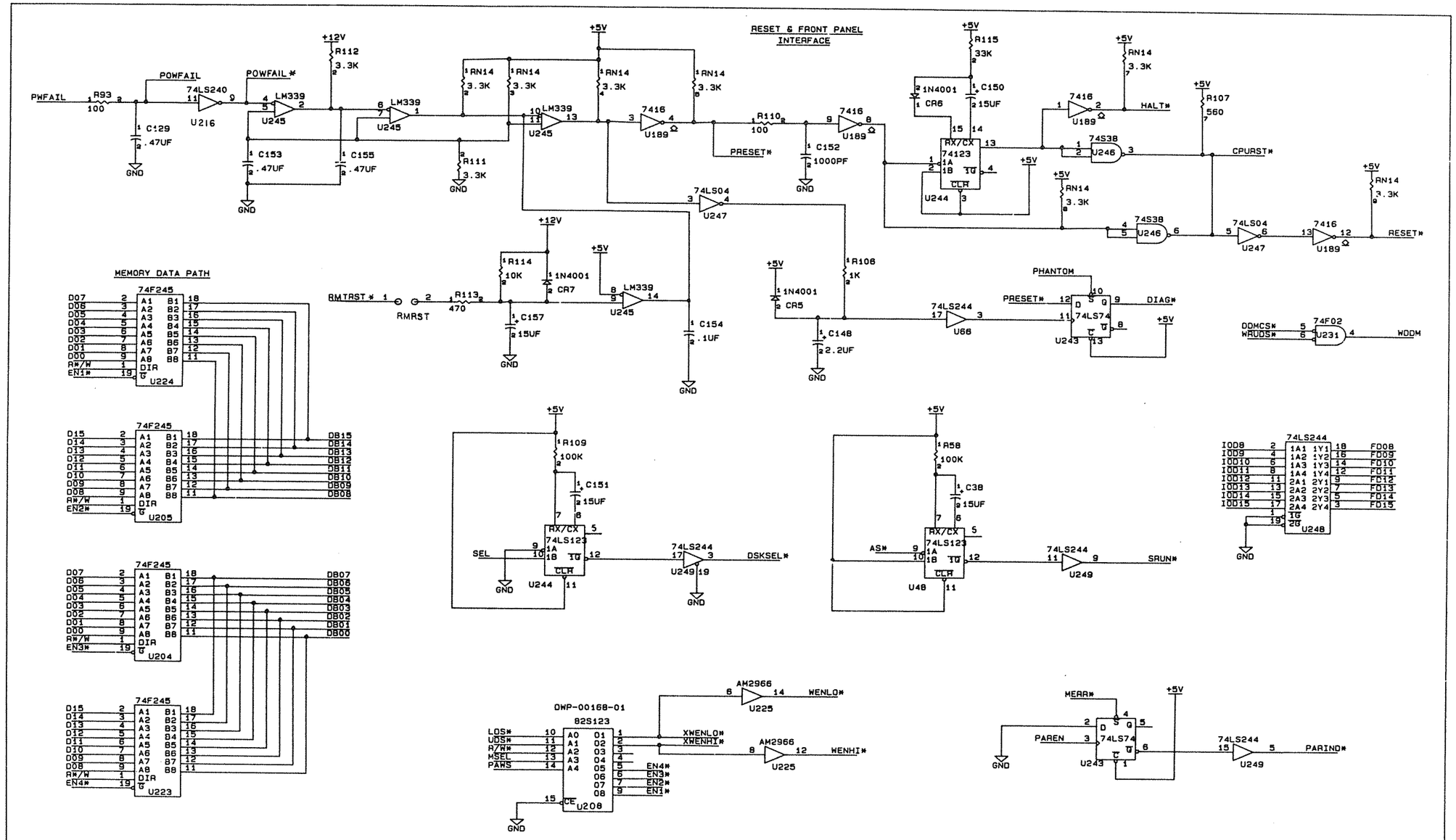

D	NUMBER DWL-00177-00		REV B03
SIZE	SHEET 5 OF 15		

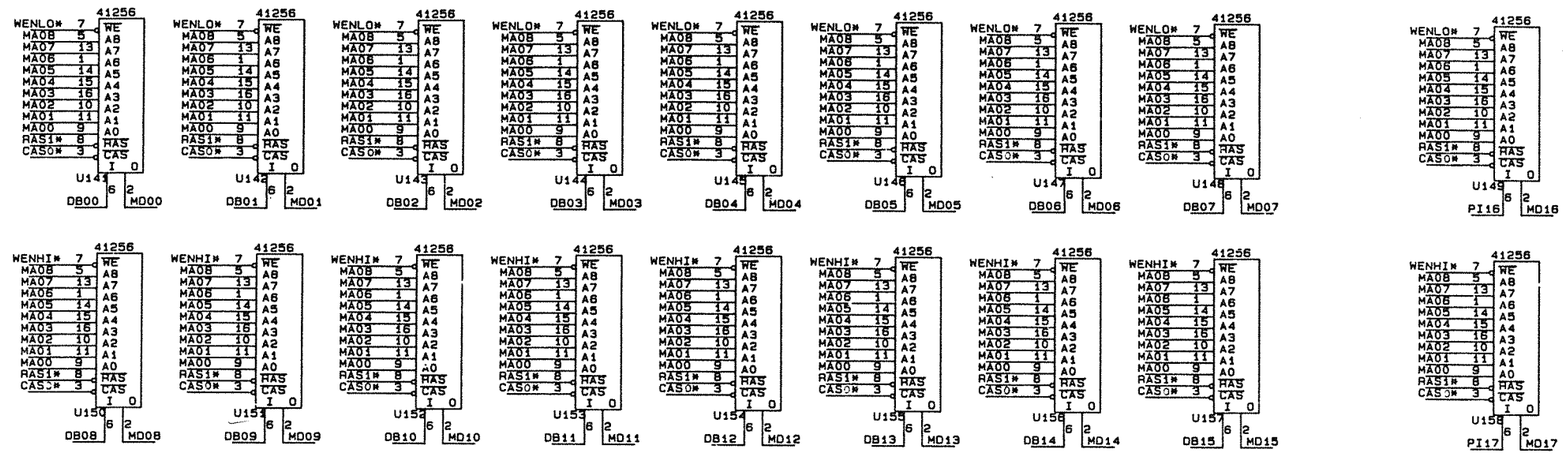

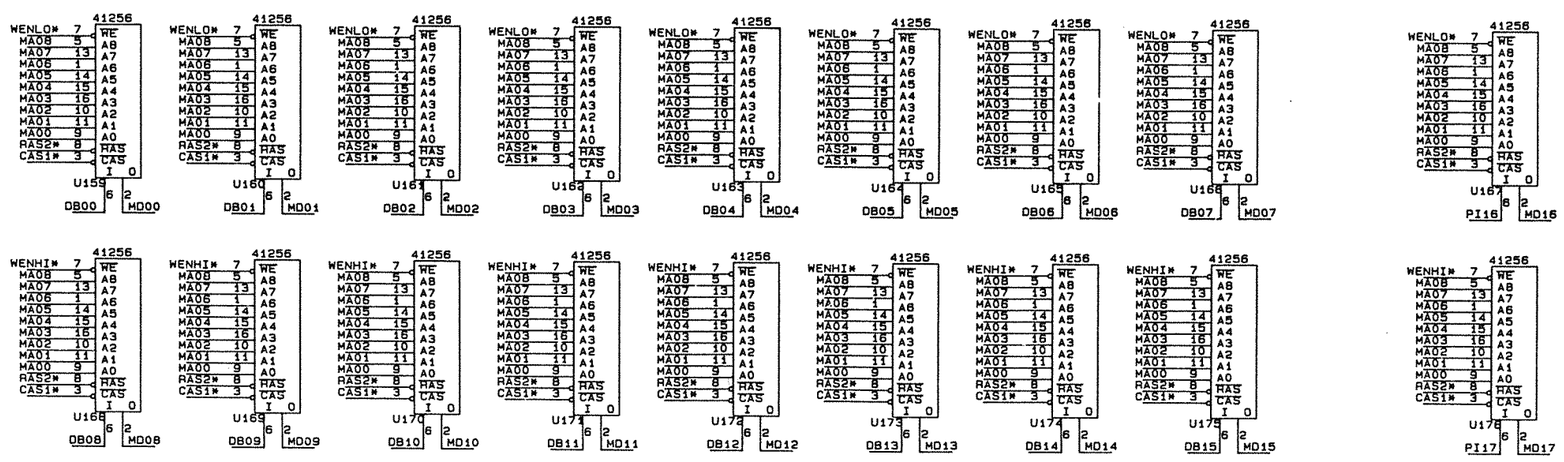

SIZE	NUMBER	REV
D	DWL-00177-00	B03
	SHEET 6 OF 15	

SERIAL I/O

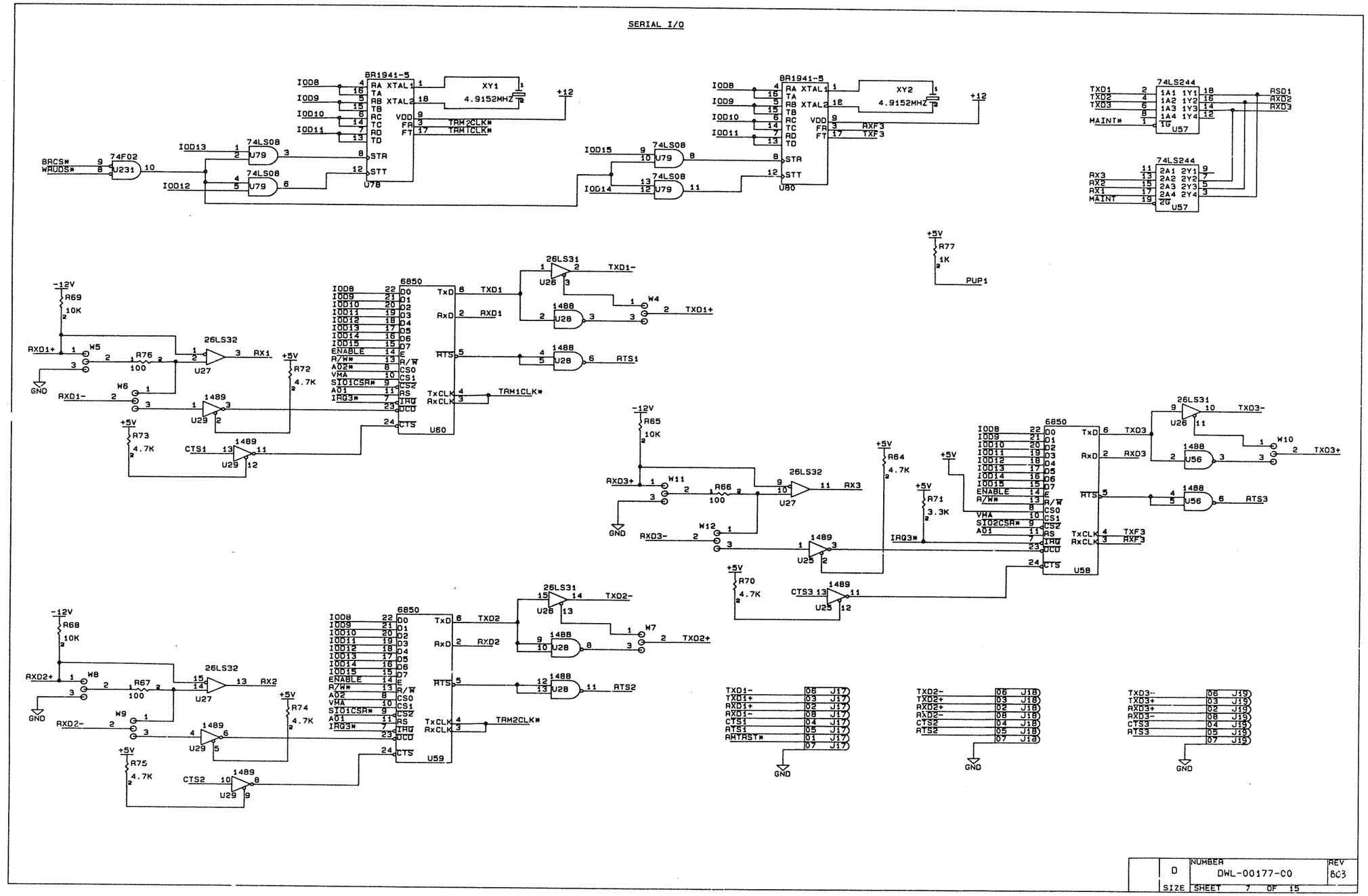

SIZE	NUMBER	REV
D	DWL-00177-00	803
	SHEET 7 OF 15	

SERIAL I/O

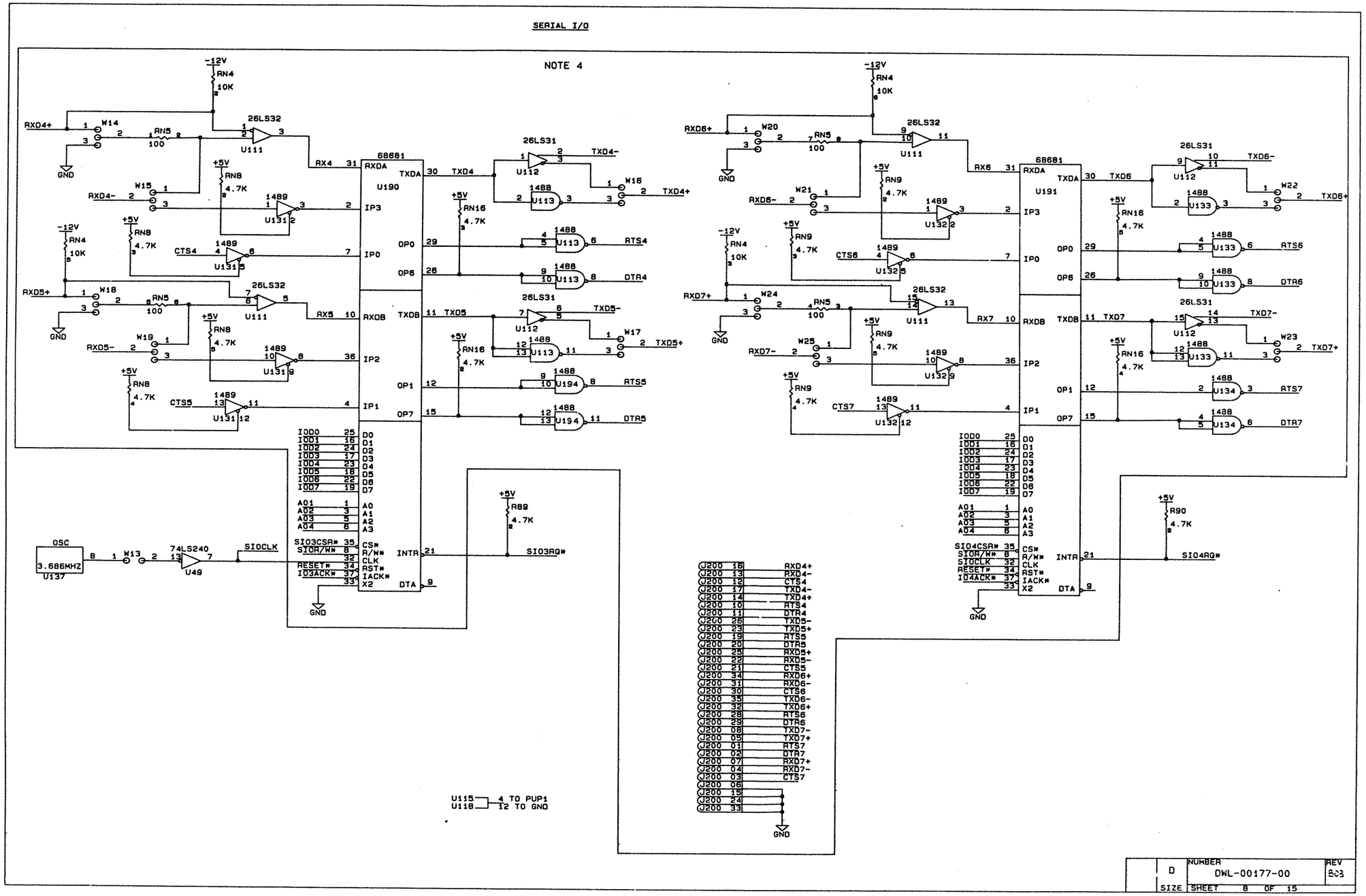

D	NUMBER DWL-00177-00		REV B03
SIZE	SHEET 8 OF 15		

DWL-00177-00
SHT 8 OF 15

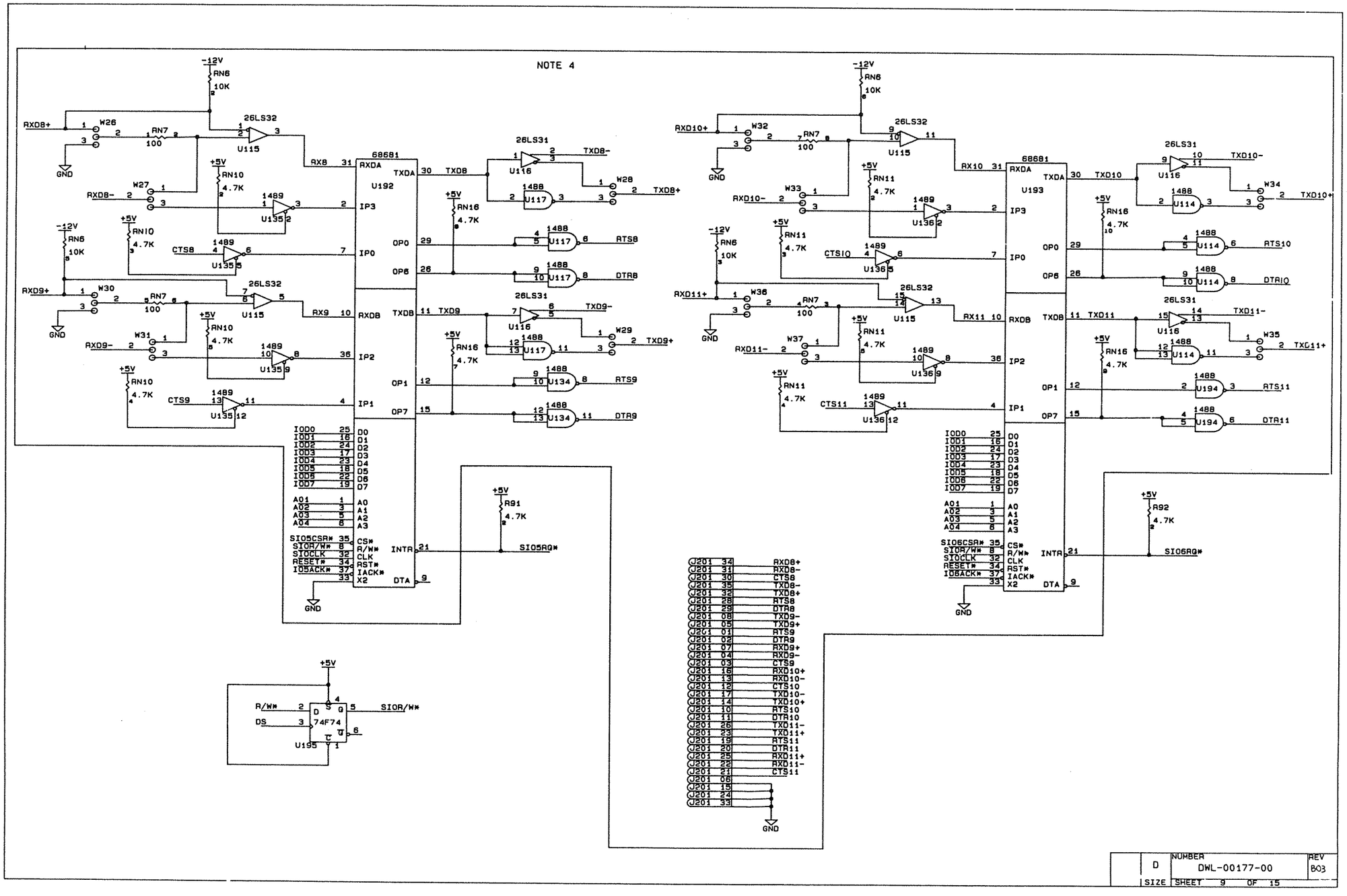

D	NUMBER DWL-00177-00		REV B03
SIZE	SHEET 9 OF 15		

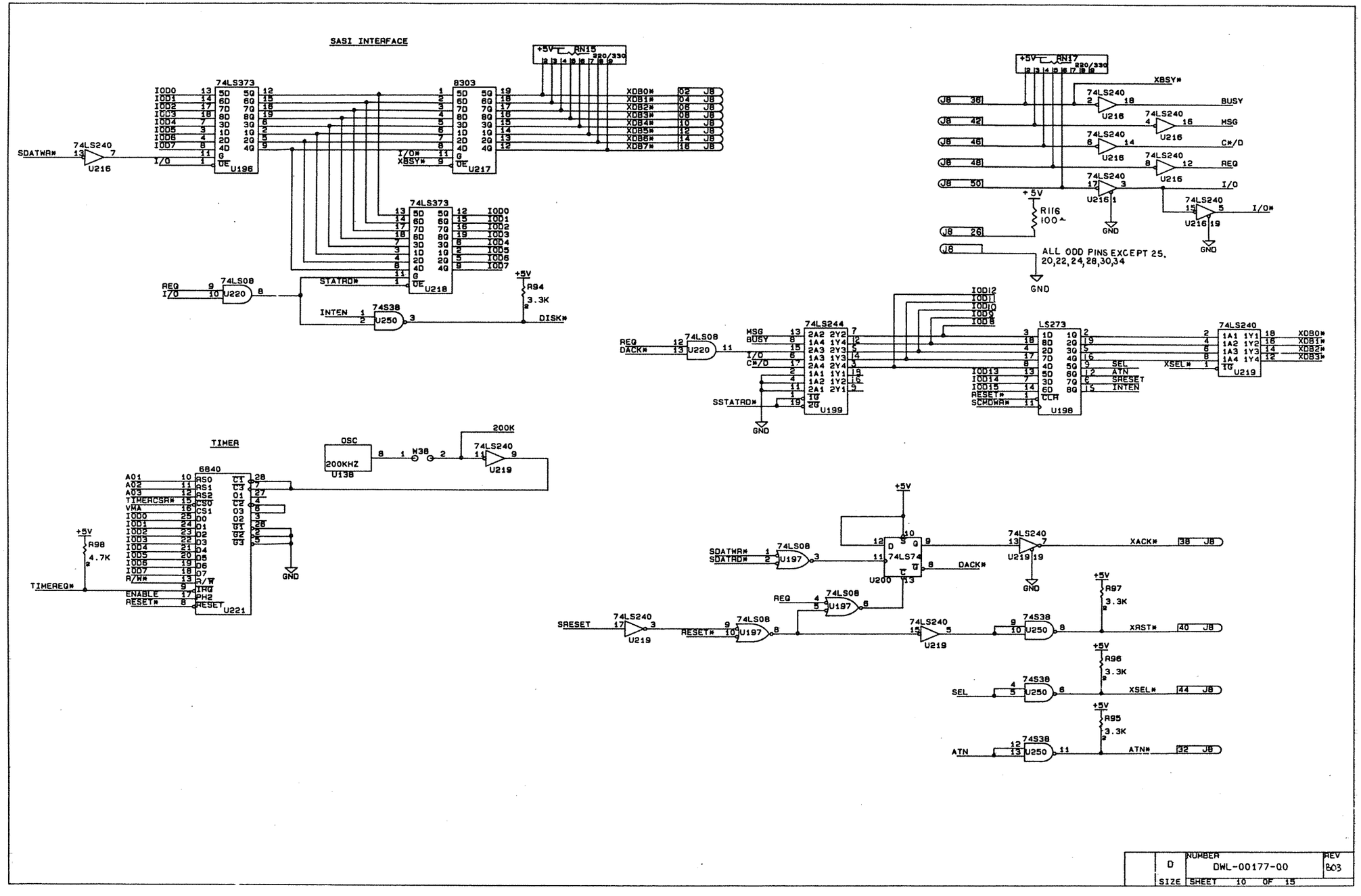

	D	NUMBER DWL-00177-00	REV 803
	SIZE	SHEET 10 OF 15	

DWL-00177-00
SW/10/15

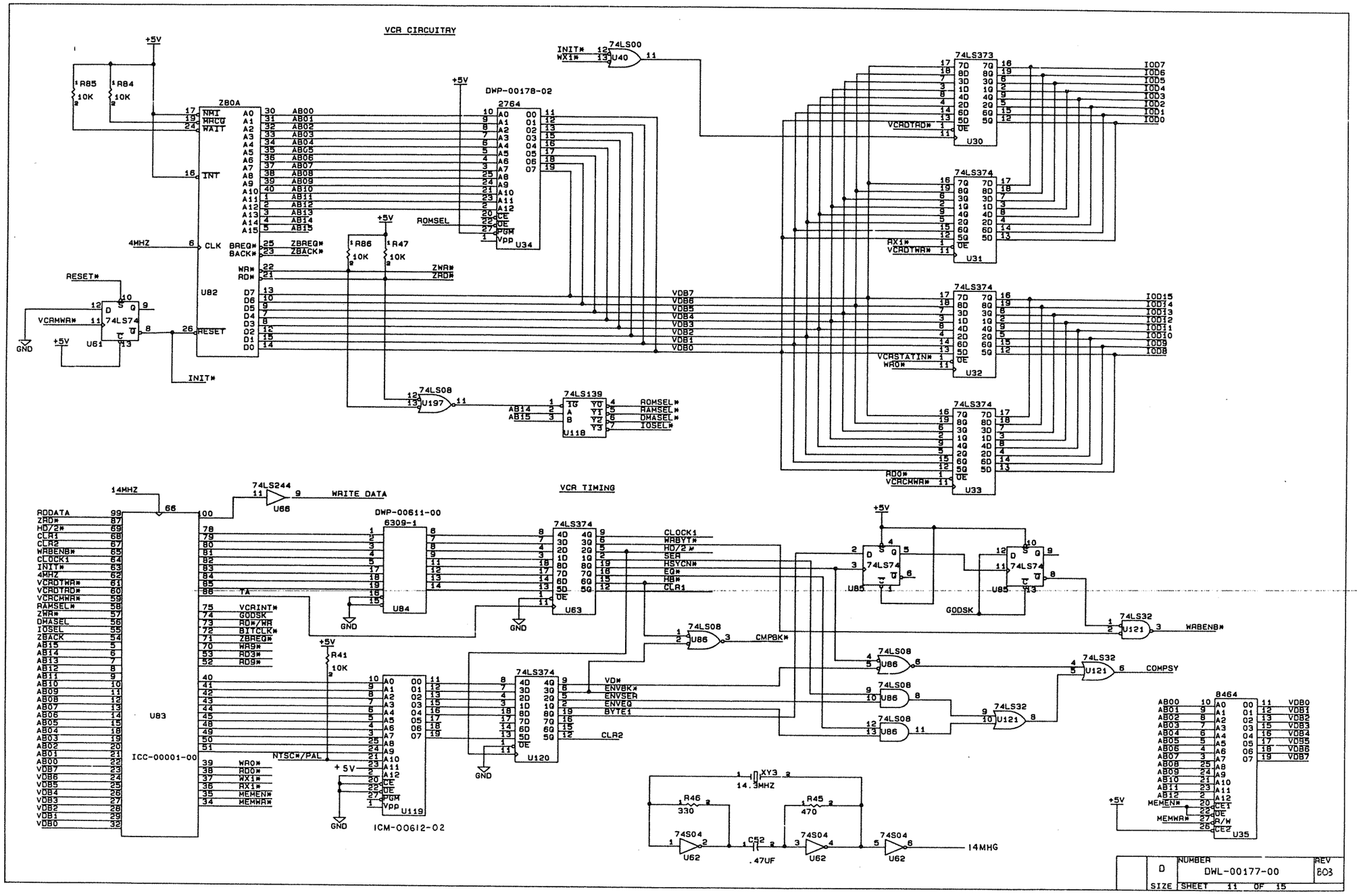

D	NUMBER DWL-00177-00		REV B03
SIZE	SHEET 11 OF 15		

DWL-00177-00
SHT 11 OF 15

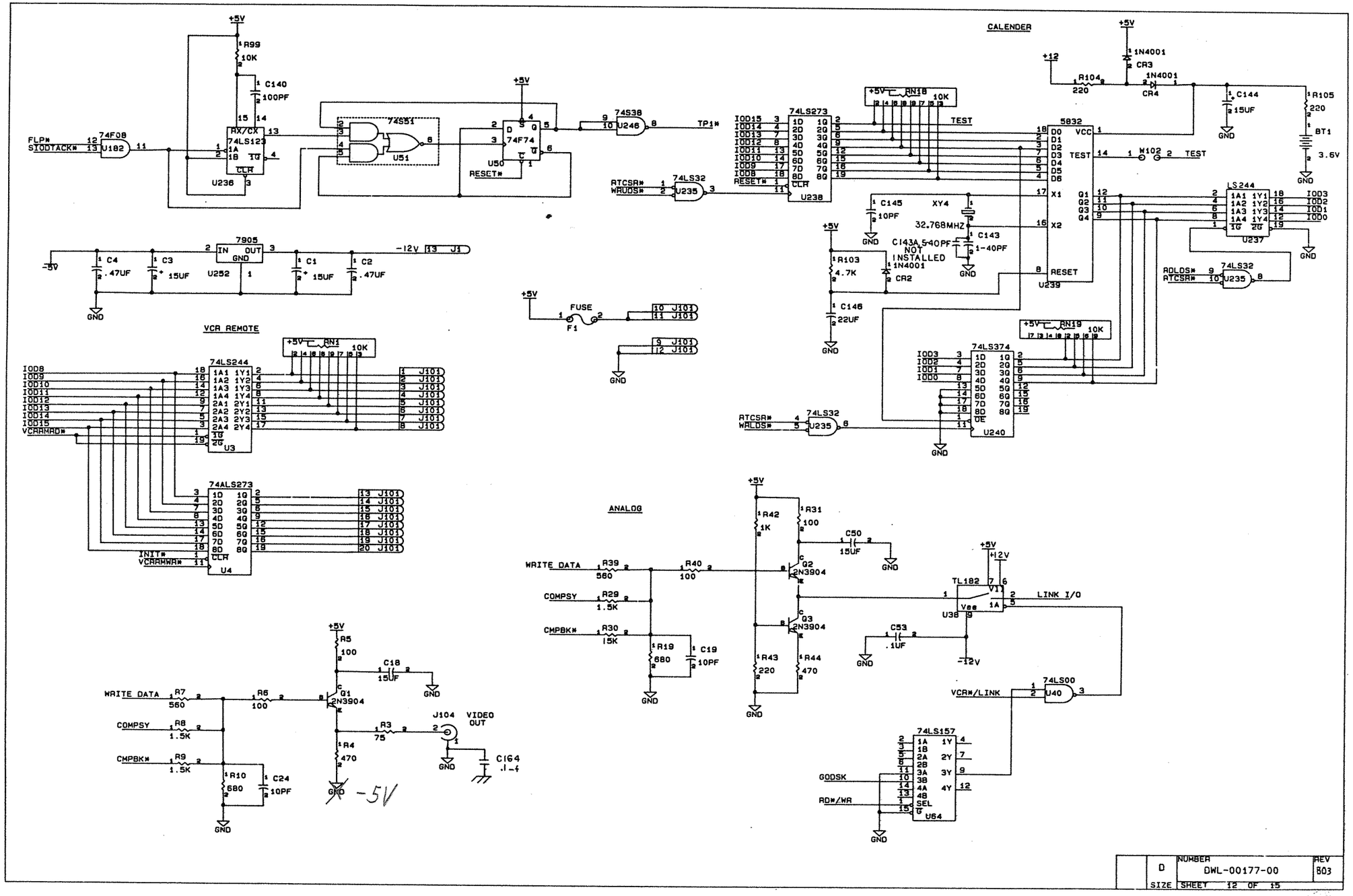
CALENDER
VCR REMOTE
ANALOG
74LS273
74LS244
74LS374
5832
LS244
74LS157
74LS00
TL182
7905
74F08
74LS123
74F74
74S38
74LS32
FUSE
F1
J104
VIDEO OUT
32.768MHZ
NOT INSTALLED
WRITE DATA
COMPSY
CMPBK#
LINK I/O
VCR#/LINK
GODSK
RD#/WR
TEST
RESET
-5V
DWL-00177-00
SW12 of 15
D
NUMBER
DWL-00177-00
REV
B03
SIZE
SHEET 12 OF 15

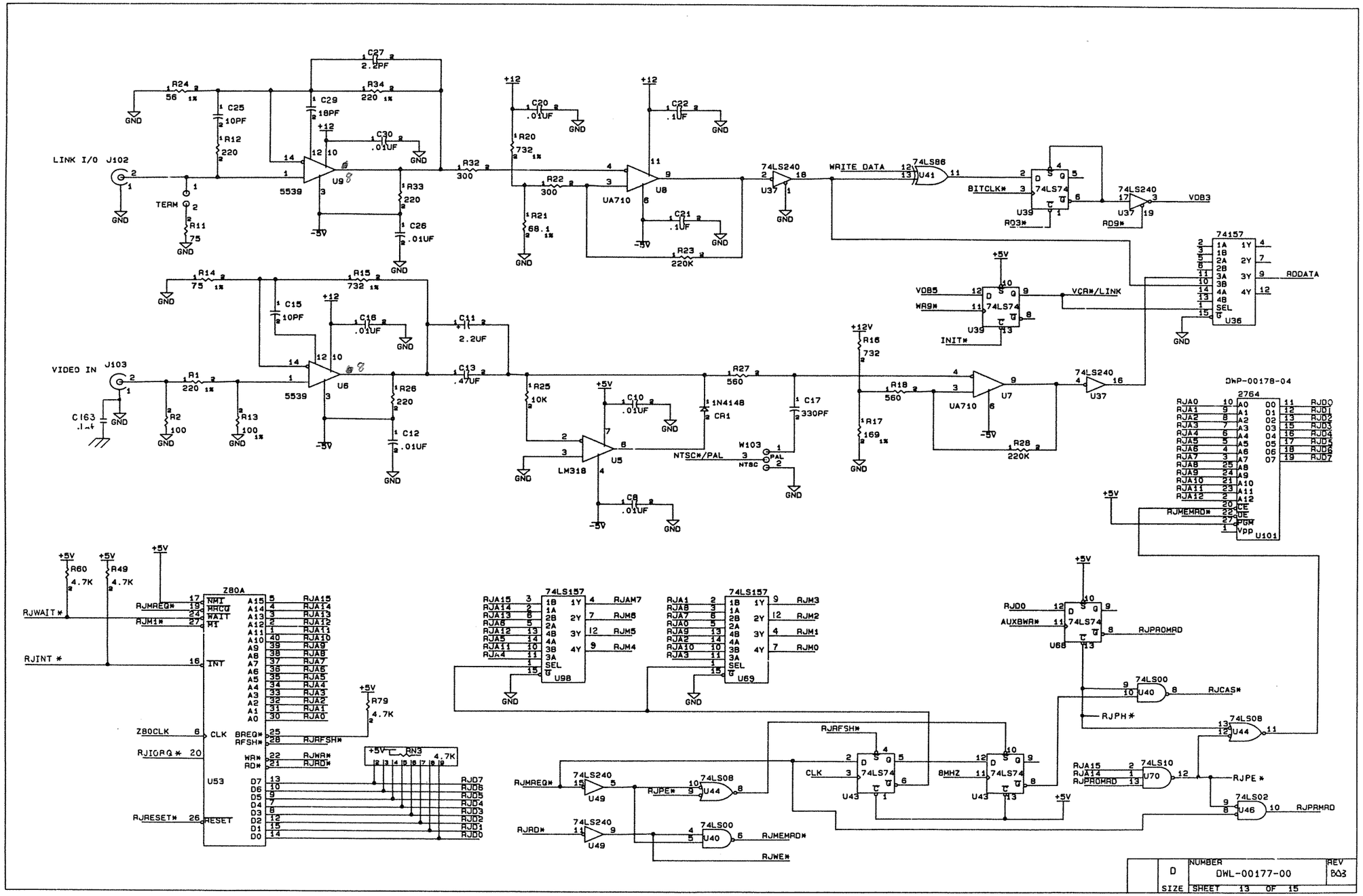
LINK I/O J102
TERM
VIDEO IN J103
C163 .1uf
U9 5539
U6 5539
U5 LM318
U8 UA710
U7 UA710
U37 74LS240
U41 74LS86
U39 74LS74
U36 74157
U101 2764
DWP-00178-04
WRITE DATA
BITCLK*
R03*
R09*
VDB3
RDDATA
VDB5
WR9*
INIT*
VCR*/LINK
NTSC*/PAL
W103
PAL
NTSC
RJMEMRD*
Z80A
U53
RJWAIT*
RJINT*
RJMREQ*
RJM1*
Z80CLK
RJIORQ*
RJRESET*
RJRFSH*
RJWR*
RJRD*
RN3 4.7K
U98 74LS157
U69 74LS157
RJAM7
RJAM6
RJAM5
RJAM4
RJM3
RJM2
RJM1
RJM0
U68 74LS74
RJPROMRD
AUXBWR*
U40 74LS00
RJCAS*
RJPH*
U44 74LS08
U70 74LS10
RJPE*
U46 74LS02
U43 74LS74
8MHZ
U49 74LS240
RJWE*
DWL-00177-00
SHT 13 OF 15
D
NUMBER
DWL-00177-00
REV
B03
SIZE
SHEET 13 OF 15

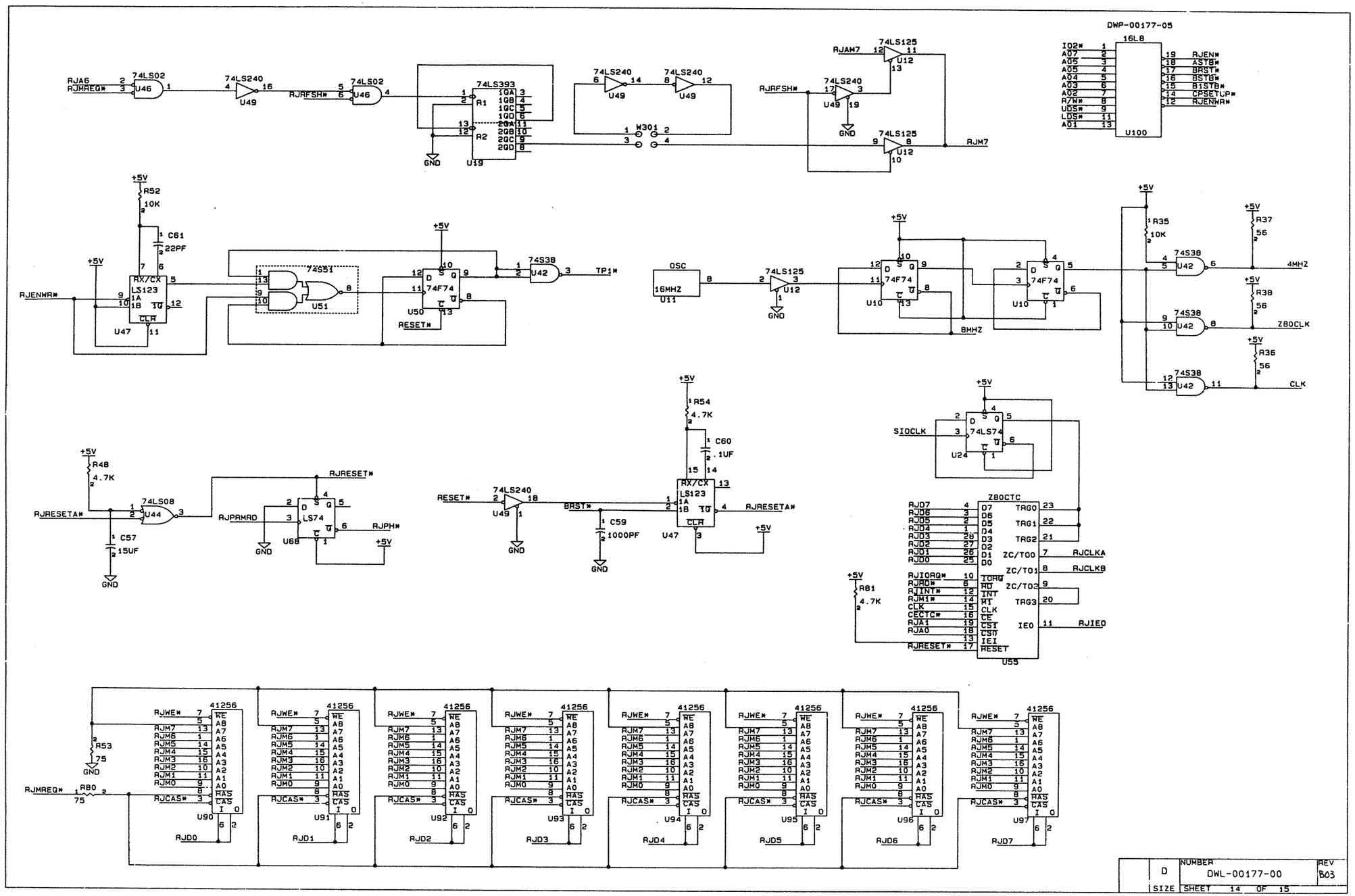

D	NUMBER DWL-00177-00		REV B03
SIZE	SHEET 14 OF 15		

DWL-00177-00
SHT 14 of 15

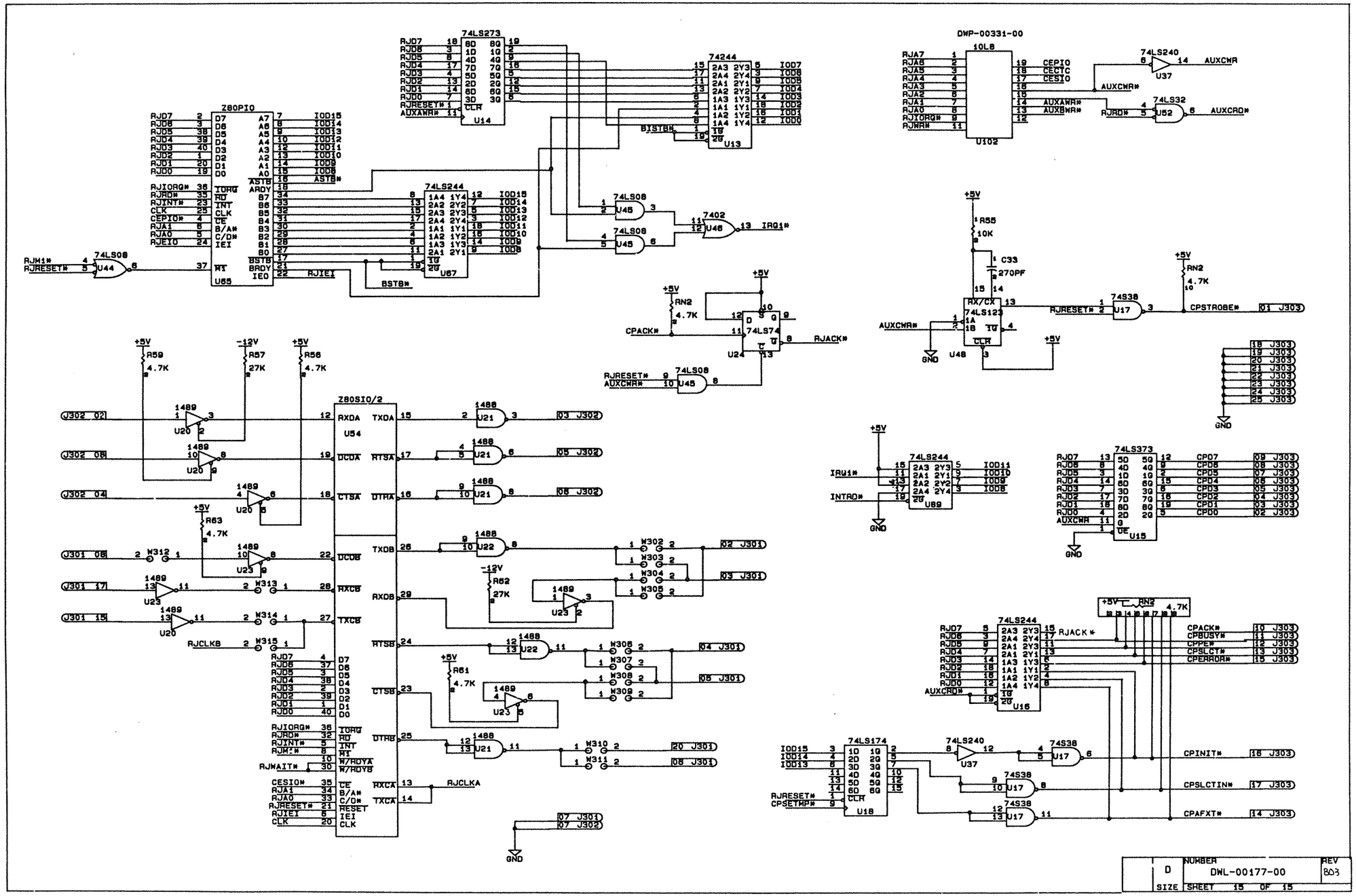

D	NUMBER DWL-00177-00		REV B03
SIZE	SHEET 15 OF 15		

DWL-00177-00
SHT 15 OF 15