Computers and Chemical Engineering 204 (2026) 109349

Contents lists available at ScienceDirect

Computers and Chemical Engineering

journal homepage: www.elsevier.com/locate/cace

A demand bidding model for multi-product industrial plants

Xin Tang [a], Michael Baldea [a,b,*], Elaine T. Hale [c], Ross Baldick [d], Richard P. O'Neill [e]

[a] Oden Institute for Computational Engineering and Sciences, The University of Texas at Austin, 201 E 24th St, Austin, 78712, TX, USA
[b] McKetta Department of Chemical Engineering, The University of Texas at Austin, 200 E Dean Keeton St, Austin, 78712, TX, USA
[c] National Renewable Energy Laboratory, 15013 Denver W Pkwy, Golden, 80401, CO, USA
[d] Department of Electrical and Computer Engineering, The University of Texas at Austin, EER, Speedway, Austin, 78712, TX, USA
[e] Advanced Research Projects Agency - Energy (ARPA-E), U.S. Department of Energy, 1000 Independence Ave SW, Washington, 20585, DC, USA

ARTICLE INFO

Keywords:
Demand bidding
Optimal power flow
Air separation unit
Demand response
Demand side management

ABSTRACT

The growing contribution of renewable energy sources has increased volatility and uncertainty in electricity markets, challenging traditional grid operation paradigms. Demand bidding (DB), a market participation model where (large) electricity users communicate their willingness to pay for electricity to the grid operator, was shown in previous work to enhance grid stability and lower generation cost. We present a DB model for multi-product industrial plants, based on an extended optimal power flow problem where the plant dynamics are represented using autoregressive with extra inputs (ARX) models. We compare DB to price-based demand-side management, showing that, under certain assumptions, the two approaches are equivalent, while DB provides more transparency and predictability to the grid operator. A case study based on an industrial air separation unit is discussed.

1. Introduction

The transformation of power systems — driven by the integration of variable renewable energy sources, the decentralization of generation, and the electrification of end-use sectors — has introduced new challenges for grid operators, including increased supply-side variability and greater uncertainty in demand patterns (Denholm et al., 2022; International Energy Agency, 2024). These developments expose the limitations of traditional grid operation models, which were designed around relatively stable and predictable electricity supply and demand. In response, there is growing interest in grid-level energy storage and coordinated demand-side management (DSM) as key strategies to enhance flexibility and maintain reliability in the face of increasing uncertainty.

Within DSM, price-based demand response (DR) is centered on incentivizing consumers to adjust their electricity usage in response to price signals or grid needs. Users reduce their load during peak periods and/or shift consumption to off-peak times, reducing stress on the grid and lowering operational costs (Vahid-Ghavidel et al., 2020). However, grid operators providing price-based DR programs face substantial demand uncertainty, since users are incentivized but not *always obligated* to reduce their electricity use, and their response to price signals might not align with real grid needs.

Demand bidding (DB) is a structured mechanism through which electricity consumers — particularly, large loads — can actively participate in electricity markets by submitting bids that reflect their willingness to adjust consumption in response to electricity prices (Li and Hong, 2016). These bids typically specify time-resolved consumption levels along with the corresponding prices users are willing to pay, allowing system operators to better anticipate and manage demand. While DB does not necessarily involve direct compensation, it offers participants potential economic benefits through price-responsive consumption and provides grid operators with a more predictable and flexible tool for balancing supply and demand.

Within the DB paradigm, users may contribute to electricity price formation (that is, the demand pattern of a large-enough consumer can influence the electricity price at their grid location and beyond). Nevertheless, initial efforts in defining DB frameworks assumed that electricity prices are specified exogenously (albeit not necessarily with certainty) ahead of time. For example, Mohsenian-Rad (2014) modeled an optimal demand bidding strategy for time-shiftable loads in day-ahead (DA) and real-time (RT) markets using stochastic optimization with price uncertainty. Similarly, Li and Hong (2017) presented an incentive-based model with an automated algorithm for RT markets in manufacturing, while Ruan et al. (2021) proposed a detailed bidding model using a decoupled full-cycle process. Zhang and Hug (2015) introduced an optimal bidding strategy for an aluminum smelter in DA and RT markets with stochastic prices.

The work of Kohansal and Mohsenian-Rad (2015) was the first, to our knowledge, to develop a scenario-based stochastic optimization

* Corresponding author at: McKetta Department of Chemical Engineering, The University of Texas at Austin, 200 E Dean Keeton St, Austin, 78712, TX, USA.
E-mail address: mbaldea@che.utexas.edu (M. Baldea).

https://doi.org/10.1016/j.compchemeng.2025.109349
Received 9 June 2025; Received in revised form 4 August 2025; Accepted 11 August 2025
Available online 20 August 2025
0098-1354/© 2025 Published by Elsevier Ltd.

framework that accounted for price formation when bidding in DA and RT markets, using price curves that reflect load changes. Other works, such as Otashu and Baldea (2018), Otashu et al. (2021), and Varelmann et al. (2022) approached demand bidding for industrial users by integrating the (grid-level) optimal power flow (OPF) problem with a (user-level) production scheduling problem. Specifically, Otashu et al. (2021) proposed a model where the grid operator has full knowledge of the operation of a manufacturing facility, and influences its electricity demand by controlling production rates and the storage of product. Varelmann et al. (2022) reduced the amount of information shared by the electricity user via a decomposition approach. These methods, however, either rely on extensive information sharing (e.g., dynamic load models and economic factors) or require significant computational effort to conceal such details.

In our previous work (Tang et al., 2024), we developed a demand bidding framework based on a modified optimal power flow (OPF) model, aimed at maximizing a welfare function that accounts for both generation costs and the revenue generated by the bidding load through the sale of its output product. The OPF problem included constraints on active power balance, transmission capacity, load shedding, and storage state of charge. Ramp rate limits were also included for both generating units and bidding entities. A integral constraint for the bidding entity was included to ensure that total production over the dispatch horizon is greater or equal to customer demand for its product. In that model, power generation profiles, power consumption (bidding facility production) schedules, and locational marginal prices (output of the dispatch process) were obtained by setting generation rates of generators and operating levels of the consuming entities. The model relied on parameters that can be largely obtained from public data. The only potentially confidential information in the model was the efficiency of the bidding entity, defined in terms of energy used per unit product.

The present work builds on the previous results and provides a key extension: the application of demand bidding to *multi-product* industrial plants, a scenario with significant practical relevance. On the modeling side, we develop specific plant models and scheduling constraints for representing multi-product industrial facilities in the DB problem. We show that the proposed DB approach is equivalent, under certain assumptions, with an iterative self-scheduling/price-based demand response considered in conjunction with the OPF problem. We then show that this iterative framework amounts to a tâtonnement process in the classical economic literature.

2. Demand bidding model structure

2.1. Optimal power flow (OPF) problem

The key task of grid operators is to balance power supply and demand while minimizing overall generation cost. Ignoring unit commitment, the resulting optimization problem – the optimal power flow problem (OPF) – is solved for every dispatch time interval. At the day-ahead timeframe the interval is typically hourly, but shorter intervals are used in real-time, and in both day-aheand and real-time are typically extended to a multi-period setting, where system operations are optimized over multiple dispatch intervals.

The OPF can be set up using an alternating current (AC) model or a direct current (DC) approximation, and the constraint system can be set up to reflect the complexities of the underlying physical system. Here, we use the problem formulation proposed by Soroudi (2017) and later modified by Tang et al. (2024). Specifically, it is assumed that the power grid comprises buses i, with each bus (i) having associated power demand ($Pd_{i,t}$) and load shedding capability (LS_i) with a unit value of lost load ($VOLL$). Wind power generation is available at certain buses, with wind power generation rates ($P^{w}_{i,t}$). Wind curtailment ($P^{wc}_{i,t}$) is considered, with a unit value loss of wind curtailment (VWC). Utility-scale batteries are also considered. The problem takes into account power for charging (P^{c}_{t}) and discharging (P^{d}_{t}), as well as state of charge (SOC).

The goal is to minimize the operating cost represented in the objective function, which includes the cost of power generation from generators g (with a unit generation cost of C_g), and the value of lost load. The objective function is formulated as a linear combination of the relevant variables for all the dispatch time intervals t:

$$OF1 = \sum_{g,t} C_g P_{g,t} + \sum_{i,t} VOLL \times LS_{i,t} + \sum_{i,t} VWC \times P^{wc}_{i,t} \tag{1}$$

Ensuring active power balance requires that total generation equals the total served demand at all times, as represented in Eq. (2). The electricity price $\lambda_{i,t}$ (the locational marginal price) at a bus i is determined as the shadow price (Lagrange multiplier) of the active power balance at that bus (2). Note that G_i and N_i are the set of generators at bus i, and set of buses connected to bus i, respectively.

$$\sum_{g\in G_i} P_{g,t} + LS_{i,t} + P^{w}_{i,t} - Pd_{i,t} - P^{c}_{i,t} + P^{d}_{i,t} = \sum_{j\in N_i} P_{ij,t} : \lambda_{i,t}, \quad \forall i,t \tag{2}$$

The active power flow P_{ij} on line ij, which connects bus i to bus j, is determined based on voltage angles (θ) and the circuit susceptance (S_{ij}) (4a). The power flow P_{ij} is constrained by an upper limit P^{max}_{ij}, the maximum transmission capacity of the line between buses i and j (4b), and there is also a restriction on the differences in voltage angles (Eq. (4c)).

Generators are subject to operational constraints, including power generation limits (P^{min}_{g} and P^{max}_{g}) and ramp rate restrictions (RU_g for ramping up and RD_g for ramping down), as specified in Eqs. (4d), (4e), and (4f). As represented in Eq. (4g), load shedding is constrained by the existing power demand (i.e., $Pd_{i,t}$) at bus i at time t. The amount of wind power generated is restricted by availability, as described in (4h). Wind curtailment is the difference between available power and wind power rate

$$P^{wc}_{i,t} = w_t P^{w,max}_{i} - P^{w}_{i,t} \tag{3}$$

The formulation explicitly incorporates the state of charge (SOC) of storage devices/batteries, assuming that there is at most one storage device per bus i. Each battery operates within charge (4i) and discharge(4j) constraints. The SOC at time t is determined by the SOC from the previous time step, the charge and discharge rates, their respective efficiencies (η_c and η_d), and the time interval (Δ_t), as defined in (4k). The SOC limits are specified in Eq. (4l). At the end of the time horizon, each battery's SOC is required to be a fraction (ϵ, close to zero) of its maximum capacity, as stated in Eq. (4n).

$$P_{ij,t} = S_{ij}(\theta_{i,t} - \theta_{j,t}) \tag{4a}$$

$$-P^{max}_{ij} \le P_{ij,t} \le P^{max}_{ij} \tag{4b}$$

$$-\pi/4 \le \theta_{i,t} - \theta_{j,t} \le \pi/4 \tag{4c}$$

$$P^{min}_{g} \le P_{g,t} \le P^{max}_{g} \tag{4d}$$

$$P_{g,t+1} - P_{g,t} \le RU_g \tag{4e}$$

$$P_{g,t} - P_{g,t+1} \le RD_g \tag{4f}$$

$$0 \le LS_{i,t} \le Pd_{i,t} \tag{4g}$$

$$0 \le P^{w}_{i,t} \le w_t P^{w,max}_{i} \tag{4h}$$

$$P^{c}_{i,min} \le P^{c}_{i,t} \le P^{c}_{i,max} \tag{4i}$$

$$P^{d}_{i,min} \le P^{d}_{i,t} \le P^{d}_{i,max} \tag{4j}$$

$$SOC_{i,t} = SOC_{i,t-1} + (P^{c}_{i,t}\eta_c - P^{d}_{i,t}/\eta_d)\Delta_t \tag{4k}$$

$$SOC_{i,min} \le SOC_{i,t} \le SOC_{i,max} \tag{4l}$$

$$SOC_{i,t_{start}} = \epsilon SOC_{i,max} \tag{4m}$$

$$SOC_{i,t_{final}} = SOC_{i,start} \tag{4n}$$

Thus, the optimal power flow problem can be formulated as:

$$\min_{P_{g,t}, LS_{i,t}, P^{wc}_{i,t}} \quad OF1(P_{g,t}, LS_{i,t}, P^{wc}_{i,t}) \tag{5a}$$

$$\text{Active power balance (Eq. (2))} \tag{5b}$$

$$\text{Constraints (3) and (4)} \tag{5c}$$

2.2. Self-scheduling (SS) problem

We analyze self-scheduling as a mechanism distinct from DR. While both involve users optimizing their consumption in response to electricity prices, the key distinction lies in how prices are treated. In DR, users typically respond to forecasted or exogenous price signals under the assumption that their actions do not affect market prices. In contrast, self-scheduling explicitly accounts for the feedback between users' schedules and the resulting locational marginal prices (LMPs). This captures scenarios where large, price-responsive entities — such as industrial loads — can influence system-level outcomes through their participation. In addition, the objective considered here incorporates revenue from the sale of products produced by bidding plants, in addition to electricity costs, thereby further distinguishing self-scheduling from conventional DR formulations.

As illustrated in Fig. 1, we study self-scheduling behavior through an iterative procedure. The process begins with the system operator solving an optimal power flow (OPF) using the plant demand as a parameter (initially, the nominal, steady-state value of this demand is used), and generating locational marginal price information $\lambda_{i,t}$. The industrial entity then computes an optimal schedule based on these prices, and the updated power demand information $P^p_{i,t}$ is an input used to solve the OPF again. Iteration continues until convergence within a predefined tolerance for the generation cost and production costs. While not implemented in real-time operations, this approach represents a means to assess the coherence between individual behavior and system-wide results, and an economic interpretation is discussed later in Section 2.4.

The scheduling model employed in this study is based on that proposed by Kelley et al. (2022), who represent the dynamics of the load using a linear autoregressive model with extra inputs (ARX). This data-driven approach captures scheduling-relevant process dynamics using historical closed-loop operational data. The ARX model effectively represents the relationship between energy consumption and production outputs by incorporating both past system states (autoregressive components) and external influencing factors (exogenous inputs). The models are in the general form

$$A(q^{-1})y(t) = B(q^{-1})u(t-d) + e(t) \tag{6}$$

where:

- $y(t)$ is the output variable (e.g., power consumption or production rate) at time t,
- $u(t-d)$ represents the exogenous input (e.g., control inputs like production setpoints) with a time delay d,
- $e(t)$ is a white noise disturbance term,
- $A(q^{-1})$ and $B(q^{-1})$ are polynomials in the backward shift operator q^{-1}, defined as:

$$A(q^{-1}) = 1 + a_1 q^{-1} + a_2 q^{-2} + \cdots + a_{n_a} q^{-n_a} \tag{7}$$

$$B(q^{-1}) = b_1 q^{-1} + b_2 q^{-2} + \cdots + b_{n_b} q^{-n_b} \tag{8}$$

where n_a and n_b are the orders of the autoregressive and input polynomials, respectively.

In the case of multi-product plants, multi-input, single-output (MISO) models are used, of the form

$$A_{\hat{j}}(q^{-1})y_{\hat{j}}(t) = \sum_{\hat{i}=1}^{n_{u_{\hat{j}}}} B_{\hat{i}}(q^{-1})\mathbf{u}_{\hat{i}}(t-d_{\hat{i}}) + \mathbf{e}(t) \tag{9}$$

where $n_{u_{\hat{j}}}$ represents the number of inputs relevant to predicting output $\hat{j}$.

Specifically, we use deterministic models (i.e., $e(t) = 0$), and note that these models must incorporate, either explicitly or implicitly, the following information:

1. A prediction of the total power consumption of the process at node i at dispatch time t, $P^p_{i,t}$, as a function of the production rates of each product π, $\Pi_{\pi,i,t}$.

$$P^p_{i,t} = f_1(\Pi_{\pi,i,t}) \; \forall \; \pi \in \{1, \ldots, N_\pi\} \tag{10}$$

We note that, following the ARX structure and to capture the process dynamics, this (linear) function may also involve values of the power consumption and production rate at previous dispatch times. For more detailed model equations used in this case, readers are referred to the supplementary information.

2. Material balance and proportionality constraints between products.

$$f_2(\Pi_{\pi,i,t}) = 0 \; \forall \; \pi \in \{1, \ldots, N_\pi\} \tag{11}$$

which recognizes that, (i) the total material balance on the plant must close and, (ii) the production rates $\Pi_{\pi,i,t}$ may not be independent.

3. The total production of a product π is computed as

$$PVT_{\pi,i} = \sum_t \Pi_{\pi,i,t} \tag{12}$$

With this representation of the process dynamics, the objective function for the SS model is formulated in terms of total electricity cost to the industrial load at node i minus revenue from product sales:

$$OF2 = \sum_t P^p_{i,t} C_{i,t} - \sum_\pi R_\pi \times PVT_{\pi,i} \tag{13}$$

where $C_{i,t}$ is the electricity price at node i at time t, which, in the iterative procedure described in Fig. 1 is set as $\lambda_{i,t}$, the locational marginal price determined as the shadow price of the power balance (2). R_π is the unit revenue for product π.

Power consumption is bounded within feasible operating limits:

$$P_{\min} \le P_t \le P_{\max} \tag{14}$$

To prevent excessive fluctuations in power usage, a rate-of-change constraint is enforced:

$$|P_{t+1} - P_t| \le \Delta P_{\max} \tag{15}$$

The inventory balance for each product π is maintained by:

$$S_{\pi,t+1} = S_{\pi,t} + F_{\pi,\text{in},t} - F_{\pi,\text{out},t} \tag{16}$$

where $S_{\pi,t}$ denotes the inventory level of product π at time t, and $F_{\pi,\text{in},t}$ and $F_{\pi,\text{out},t}$ are the inflow and outflow rates of stored product, respectively.

Additionally, a terminal inventory constraint ensures that product reserves are not depleted beyond acceptable levels:

$$S_{\pi,T} \ge S_{\pi,0} \tag{17}$$

Finally, the total production of each product over the time horizon must meet or exceed the corresponding demand:

$$\sum_t PVT_{\pi,i} \ge D_{\pi,i} \quad \forall \pi \tag{18}$$

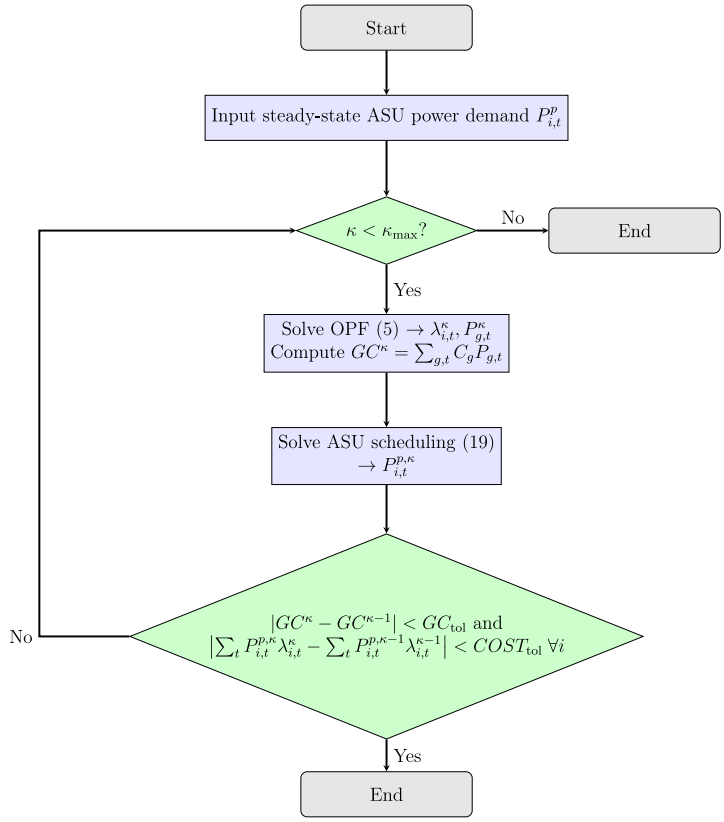

Fig. 1. Iterative self-scheduling procedure. GC_{tol} represents the convergence tolerance for the overall power generation cost, and $COST_{tol}$ is the tolerance for the production cost.

In summary, the SS optimization problem can be represented as:

$$\min_{P^p_{i,t}} \quad OF2 \tag{19a}$$

Subject to:

Process dynamics (Eq. (9)) (19b)

Inventory balance (Eq. (16)) (19c)

Power limits (Eq. (14)) (19d)

Rate of change constraint (Eq. (15)) (19e)

Terminal inventory constraint (Eq. (17)) (19f)

Demand satisfaction constraint (Eq. (18)) (19g)

2.3. OPF with demand bidding for multi-product plant

In our previous work (Tang et al., 2024), we introduced a demand bidding model for industrial loads focused on single-product plants, built upon an extended OPF framework as described in Section 2.1. The model assumes that the demand-side entity actively participates in price formation by submitting bids in the form of a time-resolved vector of power demand values along with a vector reflecting the electricity price the load is willing to pay at each time point. Bidding is reflected in the objective function, which is defined as a welfare function that comprises the difference between revenue derived from electricity-driven production and the cost of power generated. The system adheres to all OPF constraints outlined in Section 2.1. Additionally, an integral constraint ensures that the total production meets or exceeds customer demand over the specified period.

Here, we extend the demand bidding model to accommodate multi-product industrial plants, modifying the original formulation to capture the complexities of diversified production processes. In our previous work (Tang et al., 2024, equation 8), it was shown that the economics of a single product plant can be represented in the OPF with demand bidding and solved at the grid level using a set of linear constraints that tie the production rate to the power consumption of the facility. This is no longer the case for a multi product plant, for which the relationship between power consumption, the total production rate, the production rate of each product, and relationships between the production rates of the individual products (i.e., the total and component mass balances) must be accounted for. Thus, the model proposed in this work explicitly accounts for the energy consumption associated with each product, the interdependencies between products, and the individual demand requirements for each product. Specifically, the objective function is formulated as:

$$\begin{aligned} OF3 \quad &= \textstyle\sum_{g,t} C_g P_{g,t} + \sum_{i,t} VOLL \times LS_{i,t} \\ &+ \textstyle\sum_{i,t} VWC \times P^{wc}_{i,t} - \sum_{\pi,i} R_{\pi} \times PVT_{\pi,i} \end{aligned} \tag{20}$$

The active power balance at each node i is also modified to account for the time-varying load of the bidding entity:

$$\sum_{g \in G_i} P_{g,t} + LS_{i,t} + P^{w}_{i,t} - Pd_{i,t} - P^{c}_{i,t} + P^{d}_{i,t} - P^{p}_{i,t} = \sum_{j,j \neq i} P_{ij,t} \tag{21}$$

where G_i are the generators g connected to node i.

With these elements, the OPF with demand bidding can be formulated as:

$$\min_{P_{i,t}, LS_{i,t}, P^{wc}_{i,t},} \quad OF3(P_{g,t}, LS_{i,t}, P^{wc}_{i,t}, P^{p}_{i,t}) \tag{22a}$$

Active power balance (Eq. (21)) (22b)

Grid constraints (4)	(22c)
Process dynamics (9)	(22d)
Inventory constraints (16)-(17)	(22e)
Power limits and ramp rate constraints (14)-(15)	(22f)
Integral constraints on production (12)	(22g)
Production demand constraints (18)	(22h)

It should be clear that, for confidentiality reasons, the models representing the process dynamics (22d) in problems (22) and (19) may *not* be the same in practice. We will assume in what follows that the process dynamics (22d) are represented using an ARX model of the type in Eq. (9), and for the interpretation provided in the next section, that the same models are used. As a consequence, the results obtained by solving problem (22) represent an upper bound of the benefits that can be derived in practice from demand bidding.

2.4. A Tâtonnement interpretation

The iterative algorithm described Section 2.2 corresponds to a *tâtonnement* process in classic economic theory (Walras, 1874; Arrow and Debreu, 1954; Radner, 1968). In this setting:

- The OPF (Eq. (5)) acts as the market-clearing mechanism, determining prices ($\lambda_{i,t}$) based on current demand bids.
- The self-scheduling industrial loads act as price-taking agents who respond optimally to the prices by solving their local scheduling problems (Eq. (19)).
- The updated demand schedules (specifically, the power demand profiles $P^p_{i,t}$) are returned to the OPF, which adjusts prices accordingly.

This exchange continues until neither entity benefits from adjusting their decision given the current prices, and the OPF finds a feasible system-wide allocation. We make the following claim:

Assume that problems (5) and (19) are convex, and that the industrial loads do not exhibit any strategic behavior (i.e., that the industrial loads are price takers rather than participants in a Stackelberg-type game). Then, this iterative scheme converges to a competitive equilibrium — making it equivalent to solving the OPF with demand bidding. To support this claim, start with the OPF with demand bidding (22), and dualize the active power balance constraint (21). The Lagrangian is defined as:

$$\mathcal{L}(x, P^p_{i,t}, \lambda) = F(x) + \sum_{i,t} \lambda_{i,t} h_i(x, P^p_{i,t}) - \sum_{\pi,i} R_\pi PVT_{\pi,i} \tag{23}$$

With:

$$F(x) = \sum_{g,t} C_g P_{g,t} + \sum_{i,t} \text{VOLL} \cdot LS_{i,t} + \sum_{i,t} \text{VWC} \cdot P^{wc}_{i,t}$$

$$h_i(x, P^p_{i,t}) = \sum_{g \in G_i} P_{g,t} + LS_{i,t} + P^w_{i,t} - Pd_{i,t} - P^c_{i,t} + P^d_{i,t} - P^p_{i,t} - \sum_{j \in N_i} P_{ij,t}$$

where x represents the variables shared between the problems.

The problem can be decomposed as:

$$\begin{aligned} \max_\lambda \quad & \left\{ \min_x F(x) + \textstyle\sum_{i,t} \lambda_{i,t} h_i^{(x)} \right\} \\ & + \left\{ \min_{P^p_{i,t}} \textstyle\sum_{i,t} (-\lambda_{i,t} P^p_{i,t}) - R_\pi PVT_{\pi,i} \right\} \end{aligned} \tag{24}$$

which lends itself to an iterative solution of the type outlined in Section 2.2:

1. Fix $\lambda^k_{i,t}$, solve each bidder's scheduling problem to obtain $P^{p,(k)}_{i,t}$

$$\min_{P^p_{i,t}} \sum_t \lambda^k_{i,t} P^p_{i,t} - \sum_{\pi,i} R_\pi PVT_{\pi,i} \quad \text{subject to the constraints of problem (19)}$$

2. Solve the optimal power flow problem with fixed $P^{p,(k)}_{i,t}$, obtain new duals/locational marginal prices $\lambda i, t^{(k+1)}$
3. Repeat until convergence

Under the additional assumption of strong duality, this scheme converges to the solution of the OPF problem with demand bidding. It is worth noting that it is not possible to guarantee the number of iterations k required for convergence, and in practice it is likely that at most one such exchange can be performed.

Remark 1. Convexity of (5) can be achieved when a DC approximation is used, while the convexity of (19) is achieved when the models (10) and (11) are linear (which is the case with autoregressive models of the type used here).

Remark 2. The convergence of the scheme cannot be guaranteed in a practical situation since, as pointed out earlier, the models representing the process dynamics (22d) in problems (22) and (19) may not be the same.

3. Case study: Air separation unit

3.1. Test system setup

A modified IEEE 24-bus Reliability Test System (RTS) (Fig. 2), as outlined in Soroudi (2017), is utilized. The system comprises 12 thermal generators, 3 wind turbines, and 2 battery storage units with different capacities. The generation unit data are derived from Conejo et al. (2010) and Bouffard et al. (2005). For a comprehensive description of the system configuration and parameters, readers are referred to Soroudi (2017).

An air separation unit (ASU) is utilized as an example multi-product plant. ASUs separate atmospheric air into its primary components –nitrogen, oxygen, and argon– using cryogenic distillation. As shown in Fig. 3, the process begins with air compression through the main air compressor (MAC), followed by pre-purification (PP) (via pressure- or temperature-swing adsorption) to remove moisture, CO_2, and hydrocarbons. The purified air is then cooled and liquefied in a multistream heat exchanger (MHX) before entering high- and low-pressure distillation columns, where separation occurs. The ASU produces gaseous and liquid oxygen (GO_2, LO_2), nitrogen (GN_2, LO_2), and high-purity argon (Ar) through additional distillation stages. A detailed process description is available in Kelley et al. (2022).

In this case study, the ASU is connected at Bus 7 of the RTS. The plant power consumption varies based on production schedules, which sets targets for the production rates. Both self-scheduling and demand bidding mechanisms, as described in Sections 2.2 and 2.3, with the OPF problem as described in Section 2.1, are considered.

A 72-hour time horizon with a one-hour time interval is used, resulting in 72 time steps for analysis. The load schedule for all system loads, including both industrial and non-industrial demands, is presented in Fig. 4, showing the variation in load levels across the specified period. It is assumed that the other loads do not change in response to changes in the production schedule (and power demand) of the ASU.

The ASU power demand is approximately 6.2% of the nominal load at bus 7. In order to capture the effect of plant size on price formation, we analyzed scenarios where the plant size is increased tenfold, representing around 62% of the load at bus 7, or 2.7% of the total grid load. In practice, this would correspond to multiple ASUs running in parallel to serve a large demand for industrial gases, which is possible either when these plants serve a large industrial complex or when they are connected to a regional pipeline system. The revenue per unit mass of argon is six times that of oxygen, while the unit revenue for nitrogen is approximately one-fifth of that of oxygen, with nitrogen priced at about $20 per ton (Thunder Said Energy, 2025; IMARC Group, 2024).

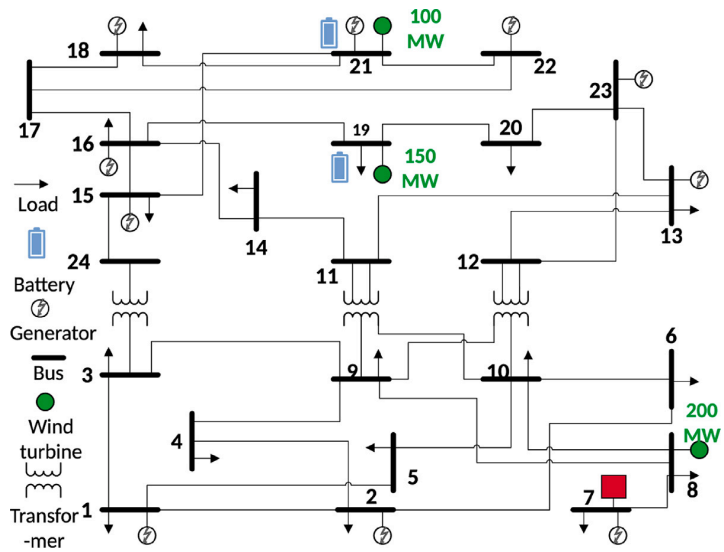

Fig. 2. The IEEE 24-bus reliability test system with wind turbines and battery energy storage. Air separation unit located on Bus 7 is denoted by the red square. *Source:* Adapted from Soroudi (2017).

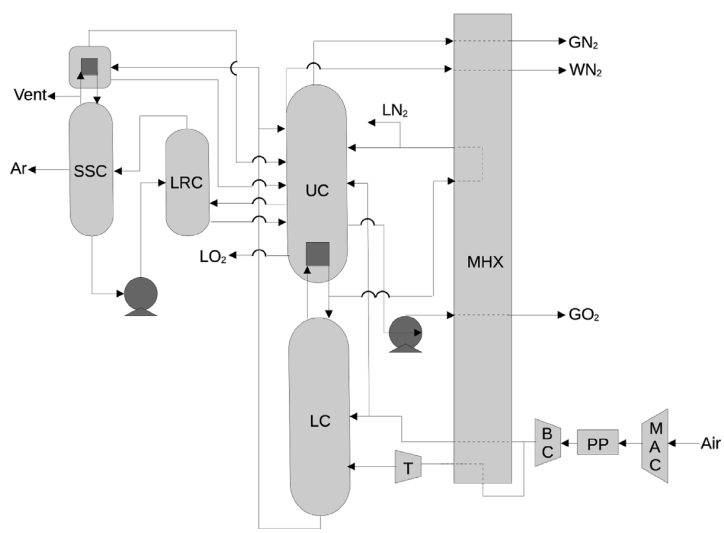

Fig. 3. Air separation unit process diagram (adapted from Kelley et al. (2022)). Air is compressed in the main air compressor (MAC), followed by pre-purification (PP). The purified air is then cooled and liquefied in a multistream heat exchanger (MHX) before entering high- and low-pressure distillation columns (LC and UC, respectively), where separation occurs. The ASU produces gaseous and liquid oxygen (GO_2, LO_2) and nitrogen (GN_2, LO_2). High-purity argon (Ar) is produced by further separating a side stream of the UC in a low ratio column (LRC) and a superstaged column (SSC).

4. Results and discussion

The base case OPF, self-scheduling, and demand bidding models were implemented in GAMS (Distribution 35.1.0) and solved using CPLEX (version 20.1). To maintain confidentiality, the results related to ASU plant operations are presented in a normalized format relative to the nominal operating values of the plant.

The results for all three cases at the ASU plant's original scale are shown in Table 1 and Fig. 5. The power demand across all cases remains closely aligned with the nominal operating level, with only small fluctuations. The optimal solution balances energy costs with revenue from product sales, resulting in stable power consumption patterns rather than aggressive shifts in response to electricity price fluctuations. As expected from the discussion in Section 2.4, the demand bidding (DB) and self scheduling (SS) cases produce very similar results, even only one iteration of the process outlined in Section 2.4 performed.

At the actual scale of the bidding plant, the impact of demand bidding is limited. Despite the demand bidding model's ability to optimize consumption patterns, it does not reduce the overall generation cost of the grid nor the energy cost for the plant. This minimal impact can be attributed to the relatively small contribution of the plant's demand adjustments in the broader grid context, where larger-scale changes in consumption or more substantial shifts in pricing would be necessary to drive noticeable reductions in generation costs.

Next, we analyze the results for the plant operating at a tenfold scale. As expected and as shown in Fig. 6, the power level and marginal price profiles for demand bidding closely resemble those of self-scheduling. The profiles are, however, not identical, with the small

Table 1
Comparison of results from three models. For energy and its costs, the base case is OPF; for total production, the base case is self-scheduling. To maintain confidentiality, absolute values for plant-level data are masked and represented as $*$. Absolute differences are reported for generation, while percentage differences are reported for plant energy use and production results. KCF denotes thousands of cubic feet.

	OPF	Demand bidding	Self-scheduling
Total energy generated (MWh)	147,156	+0.06	+0.06
Generation cost ($)	1334,917	+3.27	+3.27
Average generation cost ($/MWh)	9.07	9.07	9.07
ASU process energy use (% MWh)	*	+0.01%	+0.01%
Total energy cost to the process (% $)	*	+0.06%	+0.50%
Average energy cost ($/MWh)	10.23	10.23	10.28
Total N_2 production (% KCF)	–	0%	*
Total O_2 production (% KCF)	–	0%	*
Total Ar production (% KCF)	–	0%	*
Total Air inflow (% KCF)	–	0%	*

Table 2
Comparison of results from three models at tenfold ASU plant scale. For energy and its costs, the base case is OPF; for total production, the base case is self-scheduling. To maintain confidentiality, absolute values for plant-level data are masked and represented as $*$. Absolute differences are reported for generation, while percentage differences are reported for plant energy and production results.

	OPF	Demand bidding	Self-scheduling
Total energy generated (MWh)	148,070	−53	−53
Generation cost ($)	1341,931	−720	−720
Average generation cost ($/MWh)	9.06	9.06	9.06
ASU process energy use (% MWh)	*	−0.95%	−0.95%
Total energy cost to the process (% $)	*	−1.20%	−1.24%
Average energy cost ($/MWh)	10.39	10.37	10.36
Total N_2 production (% KCF)	–	0%	*
Total O_2 production (% KCF)	–	0%	*
Total Ar production (% KCF)	–	0%	*
Total Air inflow (% KCF)	–	0%	*

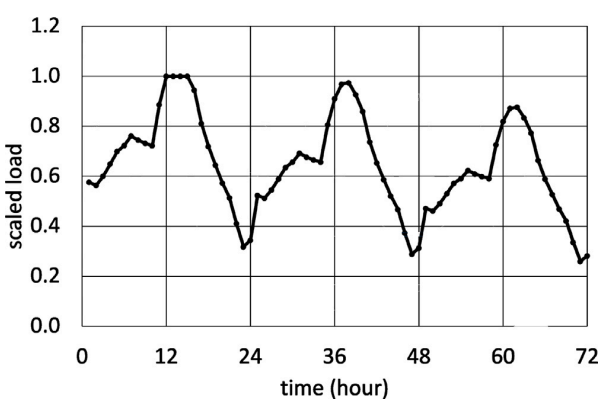

Fig. 4. Scaled grid load profile, including the demand bidding ASU load. The reference load is 2,850 MW.

discrepancies reflected in the data aggregated in Table 2. Both models dynamically adjust power levels in response to price signals, reflecting the underlying economic incentives that guide operational decisions at this larger scale.

As presented in Table 2, the total energy consumption, associated costs, and overall production output are comparable between demand bidding and self-scheduling. Notably, both models achieve a slight reduction in total electricity use and costs, while still meeting product demand.

Fig. 7 illustrates the optimal inventory levels resulting from the demand bidding model. It is important to note that the final inventory levels are constrained to match the initial levels, ensuring inventory balance over the entire optimization horizon. This constraint reflects practical operational requirements, such as maintaining consistent stock levels to support continuous production and meet future demand. The inventory trajectories demonstrate how the model strategically manages inventory fluctuations to optimize production schedules and energy usage while adhering to these boundary conditions.

Figs. 8 and 9 present example results for the battery state of charge (SOC) and generator power levels under different models. The SOC trajectories show that while the actual battery levels vary slightly between the results obtained with the different, the overall charge patterns follow a similar trend. This consistency in battery usage suggests that the underlying demand and price dynamics drive battery behavior similarly, even though the specific operating patterns differ. We posit two potential causes for these slight differences; first, that only one iteration of the SS model was solved, and, second, that the optimal solutions of the linear problems are not unique.

For the generator power levels, some slight differences are observed as well, particularly for generators connected to buses other than bus 7. This variation highlights the grid-level effects of the demand bidding model, as changes in industrial load scheduling not only affect plant operations but also influence generation dispatch across the network. These results underscore the broader system-wide implications of demand-side strategies, demonstrating how industrial demand response can shape grid operations and economics.

5. Conclusions

In this paper, we developed a linear demand bidding model for a multi-product industrial plant, extending our previous work on demand bidding for single-product plants. The proposed framework, which is demonstrated using an ARX model for a multi-product air separation unit, addresses key challenges associated with traditional price-based DR programs, particularly the uncertainty in consumer response to price signals, which can hinder grid operators' ability to maintain an economically efficient supply–demand balance.

Our results demonstrate that the demand bidding approach provides comparable performance to self-scheduling strategies in terms of operational efficiency. However, unlike self-scheduling, demand bidding

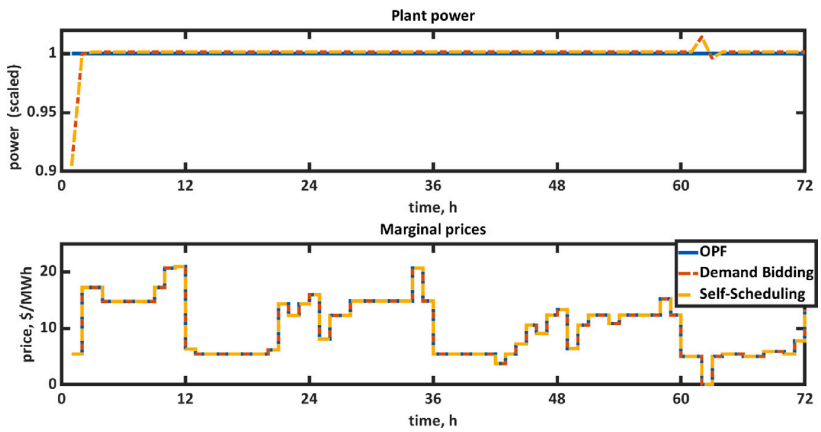

Fig. 5. ASU plant power level and marginal price profiles for all cases. Power data are scaled relative to nominal load for confidentiality.

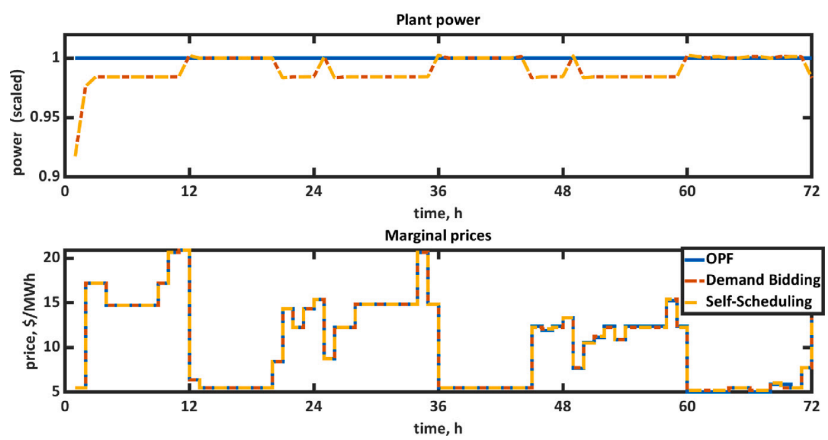

Fig. 6. ASU plant (tenfold) power level and marginal price profiles for all cases. Power data are scaled relative to nominal load for confidentiality.

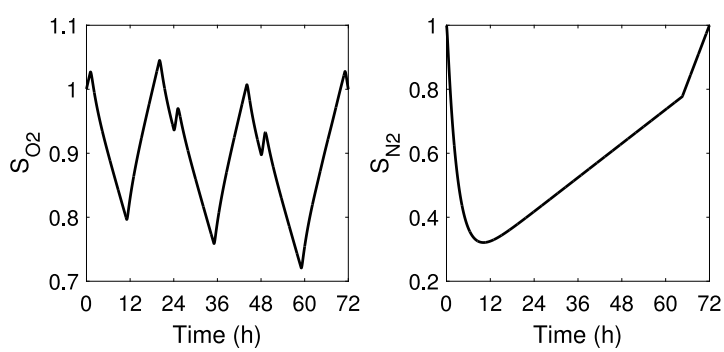

Fig. 7. Example optimal inventory levels for the demand bidding case, with the ASU capacity scaled at 10x the nominal value. Data are scaled relative to the initial storage levels for confidentiality.

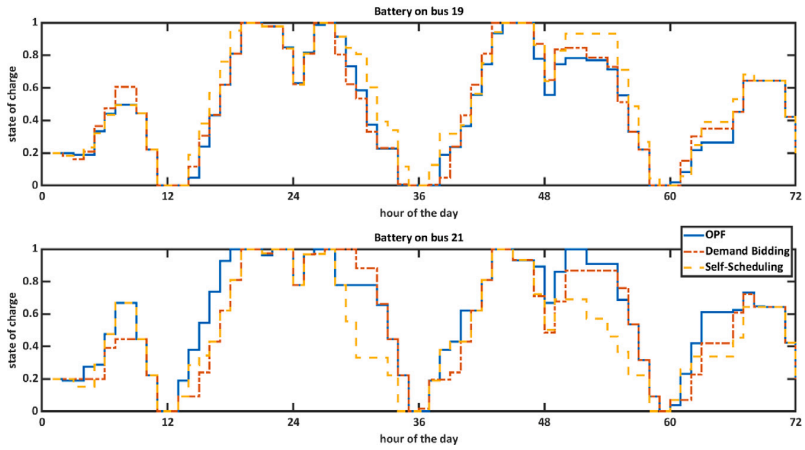

Fig. 8. State of charge profiles for batteries on buses 19 and 21, with the ASU capacity scaled at 10x the nominal value.

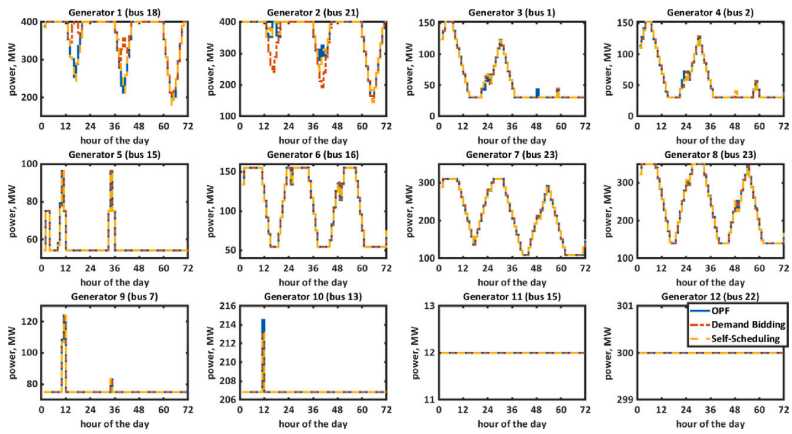

Fig. 9. Generator power profiles for all generators for all three cases, with the ASU capacity scaled at 10x the nominal value.

incorporates the broader economic benefits of the grid, offering a more coordinated and system-friendly solution for integrating large industrial loads into electricity markets. This approach enhances grid reliability while optimizing both plant-level operations and system-wide economic outcomes.

Despite its advantages, implementing demand bidding models in real-world industrial settings may face challenges related to data confidentiality, as sharing detailed operational and production information with grid operators could raise concerns for competitive industries. Future work will focus on addressing these confidentiality issues, exploring privacy-preserving optimization techniques, and extending the model to incorporate more complex market structures and dynamic grid environments.

CRediT authorship contribution statement

Xin Tang: Writing – original draft, Visualization, Software, Methodology, Investigation, Formal analysis, Conceptualization. **Michael Baldea:** Writing – review & editing, Supervision, Project administration, Methodology, Funding acquisition, Conceptualization. **Elaine T. Hale:** Writing – review & editing, Project administration, Formal analysis, Conceptualization. **Ross Baldick:** Writing – review & editing, Supervision, Formal analysis, Conceptualization. **Richard P. O'Neill:** Writing – review & editing, Formal analysis, Conceptualization.

Declaration of competing interest

The authors declare that they have no conflicts of interest.

Acknowledgments

This work was developed with funding from the U.S. Department of Energy (DOE) Advanced Research Projects Agency - Energy (ARPA-E), USA and was authored in part by the National Renewable Energy Laboratory, USA for the DOE under Contract No. DE-AC36-08GO28308. This material is based upon work supported by the U.S. Department of Energy's Office of Energy Efficiency and Renewable Energy (EERE) under the Industrial Technologies Office (ITO), USA, Award Number DE-EE0010725. The views expressed in the article do not necessarily represent the views of the DOE or the U.S. Government. The U.S. Government retains and the publisher, by accepting the article for publication, acknowledges that the U.S. Government retains a nonexclusive, paid-up, irrevocable, worldwide license to publish or reproduce the published form of this work, or allow others to do so, for U.S. Government purposes.

Disclaimer

This paper was prepared as an account of work sponsored by an agency of the United States Government. Neither the United States Government nor any agency thereof, nor any of their employees, makes

any warranty, express or implied, or assumes any legal liability or responsibility for the accuracy, completeness, or usefulness of any information, apparatus, product, or process disclosed, or represents that its use would not infringe privately owned rights. Reference herein to any specific commercial product, process, or service by trade name, trademark, manufacturer, or otherwise does not necessarily constitute or imply its endorsement, recommendation, or favoring by the United States Government or any agency thereof. The views and opinions of authors expressed herein do not necessarily state or reflect those of the United States Government or any agency thereof.

Appendix A. Supplementary data

Supplementary material related to this article can be found online at https://doi.org/10.1016/j.compchemeng.2025.109349.

Data availability

The data that has been used is confidential.

References

Arrow, K., Debreu, G., 1954. Existence of an equilibrium for a competitive economy. Econometrica 22, 265–290.

Bouffard, F., Galiana, F.D., Conejo, A.J., 2005. Market-clearing with stochastic security-part ii: case studies. IEEE Trans. Power Syst. 20, 1827–1835.

Conejo, A.J., Carrión, M., Morales, J.M., et al., 2010. Decision Making under Uncertainty in Electricity Markets, vol. 1, Springer.

Denholm, P., Brown, P., Cole, W., Mai, T., Sergi, B., Brown, M., Jadun, P., Ho, J., Mayernik, J., McMillan, C., et al., 2022. Examining supply-side options to achieve 100% clean electricity by 2035. Technical Report, National Renewable Energy Lab.(NREL), Golden, CO (United States).

IMARC Group, 2024. Argon pricing report 2024: price trend, chart, market analysis, news, demand, historical and forecast data. URL: https://www.imarcgroup.com/argon-pricing-report.

International Energy Agency, 2024. World energy outlook 2024. https://www.iea.org/reports/world-energy-outlook-2024. Licence: CC BY 4.0 (report); CC BY NC SA 4.0 (Annex A).

Kelley, M.T., Tsay, C., Cao, Y., Wang, Y., Flores-Cerrillo, J., Baldea, M., 2022. A data-driven linear formulation of the optimal demand response scheduling problem for an industrial air separation unit. Chem. Eng. Sci. 252, 117468.

Kohansal, M., Mohsenian-Rad, H., 2015. Price-maker economic bidding in two-settlement pool-based markets: The case of time-shiftable loads. IEEE Trans. Power Syst. 31, 695–705.

Li, Y.C., Hong, S.H., 2016. Real-time demand bidding for energy management in discrete manufacturing facilities. IEEE Trans. Ind. Electron. 64, 739–749.

Li, Y.C., Hong, S.H., 2017. Real-time demand bidding for energy management in discrete manufacturing facilities. IEEE Trans. Ind. Electron. 64, 739–749. http://dx.doi.org/10.1109/TIE.2016.2599479.

Mohsenian-Rad, H., 2014. Optimal demand bidding for time-shiftable loads. IEEE Trans. Power Syst. 30, 939–951.

Otashu, J.I., Baldea, M., 2018. Grid-level battery operation of chemical processes and demand-side participation in short-term electricity markets. Appl. Energy 220, 562–575.

Otashu, J.I., Seo, K., Baldea, M., 2021. Cooperative optimal power flow with flexible chemical process loads. AIChE J. 67, e17159.

Radner, R., 1968. Competitive equilibrium under uncertainty. Econometrica 36, 31–58.

Ruan, G., Zhong, H., Shan, B., Tan, X., 2021. Constructing demand-side bidding curves based on a decoupled full-cycle process. IEEE Trans. Smart Grid 12, 502–511. http://dx.doi.org/10.1109/TSG.2020.3012562.

Soroudi, A., 2017. Power System Optimization Modeling in GAMS. Volume 78. Springer.

Tang, X., O'Neill, R., Hale, E., Baldick, R., Baldea, M., 2024. Demand bidding vs. demand response for industrial electrical loads. Comput. Chem. Eng. 108768.

Thunder Said Energy, 2025. Cryogenic air separation: costs and energy economics?. URL: https://thundersaidenergy.com/downloads/cryogenic-air-separation-the-economics/.

Vahid-Ghavidel, M., Javadi, M.S., Gough, M., Santos, S.F., Shafie-Khah, M., Catalao, J.P., 2020. Demand response programs in multi-energy systems: A review. Energies 13 (4332).

Varelmann, T., Otashu, J.I., Seo, K., Lipow, A.W., Mitsos, A., Baldea, M., 2022. A decoupling strategy for protecting sensitive process information in cooperative optimization of power flow. AIChE J. 68, e17429.

Walras, L., 1874. Elements of Pure Economics. Routledge.

Zhang, X., Hug, G., 2015. Bidding strategy in energy and spinning reserve markets for aluminum smelters' demand response. In: 2015 IEEE Power & Energy Society Innovative Smart Grid Technologies Conference. ISGT, IEEE, pp. 1–5.