QUANTUM CONTRACTION PROVIDER

RESEARCH NOTES IN THE ENEXA AND QROM PROJECTS

February 23, 2026

ABSTRACT

We investigate schemes to compute contractions of tensor networks by quantum computing.

Contents

1 Introduction **1**

1.1 Quantum and Tensor Parallelism 2

1.2 Circuit Preparation schemes 2

1.3 Related Works 2

2 Notation **3**

2.1 Comparing tensor networks and quantum circuits 3

2.2 Controlled Single Qubit Gates 3

2.3 Measurements and Contractions 4

2.3.1 Direct measurement 4

2.3.2 Phase sensitive measurement 4

2.3.3 POVM measurements 5

3 Function Encoding **5**

3.1 Basis encoding 5

3.2 Sign encoding 6

4 Contractions based on Transforms **7**

4.1 Walsh-Hadamard transform 8

4.2 Examples 8

5 Extension: Sampling from proposal distributions **9**

1 Introduction

Quantum circuits are contractions of gate tensors and therefore tensor networks, and measurement probabilities are given by contractions.

Tensor Network contractions can be performed by quantum computing as follows:

- **Rejection Sampling based:** Can augment any tensor network by an Bayesian network, which is efficiently inferred by forward sampling. We prepare quantum states, which measurement statistics can be utilized to prepare samples from interesting distributions such as Computation-Activation Networks. The square root quantum advantage is obtained by amplitude amplification.
- **Phase Estimation based:** Measure the eigenvalues of a Grover operator to a formula and a q-sample.
- **Transform based:** Here we investigate how we can exploit these as contraction provider for $\mathrm{tnreason}$. We are inspired by Deutsch-Jozsa algorithm, which we generalize here.

Generic tensor network contraction is NP-hard, reflecting the hardness of logical and probabilistic inference. Quantum Computers can prepare states, which measurement distribution are specific network contractions, which can be hard to contract classically. We study schemes to retrieve information about these states, for example by sampling schemes, and use the retrieved information in inference.

1.1 Quantum and Tensor Parallelism

By its central axioms, quantum mechanics of multiple qubits is formulated by tensors capturing states and discrete time evolutions. Motivated by the structural similarity, we investigate how quantum circuits can be utilized for the tensor-network based approach towards efficient and explainable AI in the $\mathrm{tnreason}$ framework.

Potential Advantage: *Quantum Parallelism* (see (Schuld and Petruccione, 2021, Section 3.2.5)).

- Evaluation of multiple function values by single circuit evaluation, we will relate it with the contraction of β^f here.
- Contraction perspective: Loop-tolerant efficient contractions.
- However: Need a generic encoding scheme to exploit this advantage, which is not known yet.
- We here only provide a scheme based on post-selection, which provides a quantum advantage only through amplitude amplification. Without amplitude amplification and post-selection of samples, the encoded distribution is always uniform.
- Further challenge: Application in NISQ devises Preskill (2018), instead of fault-tolerant quantum computers.

Comparison with classical side, which we can call *Tensor Network Parallelism*: Message-passing schemes for efficient contractions, but exact in limited cases.

1.2 Circuit Preparation schemes

Circuit preparing schemes based on approximation:

- Q-Alchemy Araujo et al. (2023), Q-Tucker CITE
- Tensor-Network Optimization based (alternating schemes) Rudolph et al. (2023b,a)

Exact circuit preparing schemes for distributions:

- Grover-Rudolph Grover and Rudolph (2002), but no quantum advantage Herbert (2021)
- Uniform controlled rotations Möttönen et al. (2005)
- Quantum Shannon decomposition Shende et al. (2006)

Circuit simulation: Since $\mathrm{qcreason}$ can prepare quantum circuits to arbitrary tensor networks, it can also be used to simulate quantum circuits (with an overhead!).

- Sander et al. (2025b,a)

1.3 Related Works

Quantum algorithms for linear algebra:

- Contraction by SWAP and Hadamard test (see Appendix)
- Deutsch-Jozsa Algorithm
- HHL algorithm to solve linear equations Harrow et al. (2009)

2 Notation

We present the basic notation of quantum circuits using the tensor network notation used in the tnreason formalism.

2.1 Comparing tensor networks and quantum circuits

First of all, we need to extend to complex tensors, which are maps

$$\tau : \bigtimes_{k\in[d]} [2] \to \mathbb{C}$$

with image in $\mathbb{C}$ instead of $\mathbb{R}$ as in the report.

A coarse comparison of the nomenclature used for quantum circuits and tensor networks:

Quantum Circuit	**Tensor Network**
Qubit	Boolean Variable
Quantum Gate	Unitary Tensor
Quantum Circuit	Tensor Network of unitaries on a directed graph

Some constraints appear for a tensor network to be a quantum circuit

- **Incoming-Outgoing structure:** Variable appear at most once as incoming and at most once as outgoing variables. Those not appearing as outgoing (respectively as incoming) are the input and the output variables of the whole circuit.
- **Unitarity of each gate:** That is the variables of each tensor are bipartite into sets A^{in} and A^{out} of same cardinality and the basis encoding with respect to this bipartition, that is

$$T_{\text{in}\to\text{out}}[X^{\text{in}}, X^{\text{out}}] : \bigotimes_{k\in A^{\text{in}}} \mathbb{C}^2 \to \bigotimes_{k\in A^{\text{out}}} \mathbb{C}^2 ,$$

  is a unitary map, that is

$$(T_{\text{in}\to\text{out}})^H \circ (T_{\text{in}\to\text{out}}) = \left\langle T_{\text{in}\to\text{out}}[X^{\text{in}}, Y], \overline{T}_{\text{in}\to\text{out}}[Y, X^{\text{out}}]\right\rangle_{[X^{\text{out}}, X^{\text{in}}]} = \delta\left[X^{\text{out}}, X^{\text{in}}\right] .$$

- **Acyclicity:** Incoming and outgoing variables of each tensor core provide a direction of each edge tensor. With respect to this directionality the graph underlying the tensor network has to be acyclic.

The unitary tensors can be aligned layerwise, if and only if the last two assumption hold, i.e. the directed graph is acyclic and each variable appears at most once as an incoming and at most once as an outgoing variable.

2.2 Controlled Single Qubit Gates

We define the rotation gate around the Y-axis by an angle α as

$$R_Y(\alpha)\left[A^{\text{in}}, A^{\text{out}}\right] := \begin{bmatrix} \cos\left(\frac{\alpha}{2}\right) & -\sin\left(\frac{\alpha}{2}\right) \\ \sin\left(\frac{\alpha}{2}\right) & \cos\left(\frac{\alpha}{2}\right) \end{bmatrix}$$

Further we define the Pauli-X:

$$\sigma_1\left[A^{\text{in}}, A^{\text{out}}\right] := \begin{bmatrix} 0 & 1 \\ 1 & 0 \end{bmatrix}$$

Controlled single qubit gates are defined using control qubits, where the gate is applied to the target qubit if the control qubits are in a specific state and the identity is applied otherwise. In the tensor network diagrams, we do not distinguish between incoming and outgoing control qubit variables, since the control acts as a Dirac tensor. Thus, controlled unitary with target qubit X_t and control qubits X_c are represented by tensors

$$\mathcal{U}\left[X_{t,\text{in}}, X_{t,\text{out}}, X_c\right]$$

where for each state x_c to the control variables we have that

$$\mathcal{U}\left[X_{t,\text{in}}, X_{t,\text{out}}, X_c = x_c\right]$$

is a unitary matrix acting on the leg space of the target variable.

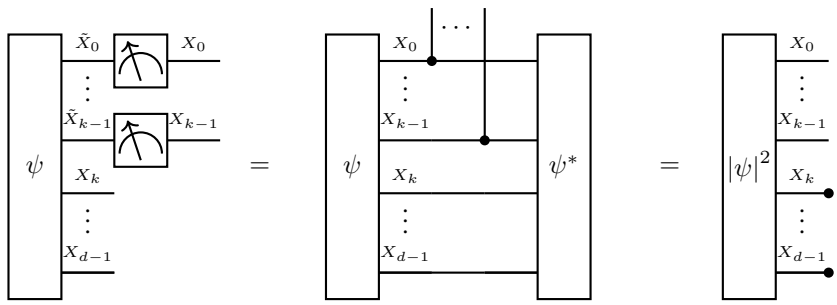

Figure 1: Computational Basis Measurement of a quantum state ψ. The measurement symbols on the left side indicate the measured qubits and the first equation is understood as a definition. In the second equation we sketch, that the measurement distribution is equal to the contraction of the square absolute transform of ψ to the measured variables.

2.3 Measurements and Contractions

2.3.1 Direct measurement

The computational basis measurement of the qubits X_A of a Quantum State $\psi\left[X_{[d]}\right]$ is equal to drawing samples from a distribution

$$\mathbb{P}\left[X_A\right] = \left\langle \psi\left[X_{[d]}\right], \psi^*\left[X_{[d]}\right]\right\rangle_{[X_A]} .$$

Here $\psi^*\left[X_{[d]}\right]$ is the complex conjugate of $\psi\left[X_{[d]}\right]$. When ψ is prepared by a quantum circuit acting on a initial state, the complex conjugate is the hermitean conjugate of the circuit acting on the complex conjgate of the initial state.

We abbreviate these contractions by extending the contraction diagrams with measurement symbols (see Figure 1).

Each complex-valued tensor $\psi\left[X_{[d]}\right]$ has a decomposition into a phase tensor $\phi\left[X_{[d]}\right]$ and an absolute tensor $|\psi|\left[X_{[d]}\right]$ defined by

$$\psi\left[X_{[d]}\right] = \left\langle \exp\left[i \cdot \phi\left[X_{[d]}\right]\right], \left|\psi\left[X_{[d]}\right]\right|\right\rangle_{\left[X_{[d]}\right]} .$$

The measurement distribution is depends only on $|\phi|$, that is

$$\mathbb{P}\left[X_{[d]}\right] = \left|\psi\left[X_{[d]}\right]\right|^2 .$$

Note, that this measurement distribution is not sensitive to the phases of the amplitudes.

When only a subset of variables is measured, the distribution is the contraction of the absolute square transform (these operations do not commute)

$$\mathbb{P}\left[X_{\mathcal{U}}\right] = \left\langle \left|\psi\left[X_{[d]}\right]\right|^2 \right\rangle_{[X_{\mathcal{U}}]} .$$

When we are interested in the preparation of quantum states with a specific computational basis measurement distribution, we can restrict to states with vanishing phase cores, that is

$$\psi\left[X_{[d]}\right] = \left\langle \exp\left[i \cdot 0\left[X_{[d]}\right]\right], |\psi|\left[X_{[d]}\right]\right\rangle_{\left[X_{[d]}\right]} = |\psi|\left[X_{[d]}\right].$$

2.3.2 Phase sensitive measurement

When applying a Walsh-Hadamard transform on the qubits $\mathcal{V}\backslash\mathcal{U}$ to be closed (see Figure 2), the probability of measuring the closed qubits in the ground state is

$$\mathbb{P}\left[X_{\mathcal{V}\backslash\mathcal{U}} = 0_{\mathcal{V}\backslash\mathcal{U}}, X_{\mathcal{U}}\right] = \frac{1}{2^{|\mathcal{U}|}} \cdot \left|\left\langle \psi\left[X_{[d]}\right]\right\rangle_{[X_{\mathcal{U}}]}\right|^2 .$$

We thus sample from the contracted quantum state. Note that in this way, the relative phases of the amplitudes are contracted before the absolutes are taken. In this way, the measurement distribution is sensitive to the relative phases. This property is exploited in the Deutsch-Jozsa algorithm, which utilizes signs of the amplitudes.

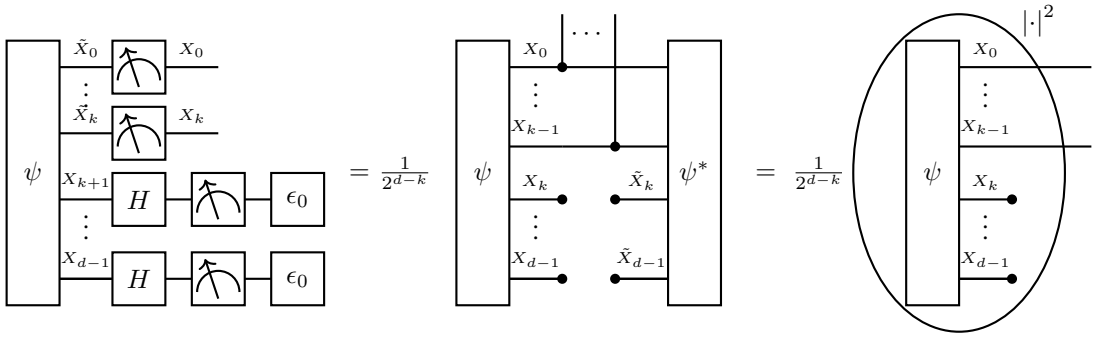

Figure 2: Computational Basis Measurement of a quantum state ψ, after the Walsh-Hadamard Transform on the closed qubits. By the ellipse we indicate a coordinatewise transform to the square of the absolute, after the contraction.

2.3.3 POVM measurements

The main difficulty of using quantum circuits as contraction providers is that we can only extract information through measurements. Therefore measurement is the only way to execute contractions of the circuit, which come with restrictions when interested in contraction with open variables.

The most general measurement formalism is through a POVM, a set $\{E_y \,:\, y \in [r]\}$ of positive operators with

$$\sum_{y\in[r]} E_y = I$$

Measuring a pure state $|\psi\rangle$ We then get outcome m with probability

$$\langle\psi|E_y|\psi\rangle$$

We define a measurement variable Y taking indices $y \in [r]$ and a measurement tensor

$$E[Y, X^{\text{in}}, X^{\text{out}}]$$

with slices

$$E[Y = y, X^{\text{in}}, X^{\text{out}}] = E_y\,.$$

Repeating the measurement asymptotically on a state $|\psi\rangle$ prepared by a quantum circuit $\tau^{\mathcal{G}}$ acting on the trivial start state $\mathbb{I}$, we denote the measurement outcome by y^j. In the limit $m \to \infty$ we get almost surely

$$\frac{1}{m}\sum_{j\in[m]} \epsilon_{y^j}\,[Y] \to \left\langle \tau^{\mathcal{G}}[X^{\text{in}}], E[Y, X^{\text{in}}, X^{\text{out}}], \tau^{\tilde{\mathcal{G}}}[X^{\text{out}}]\right\rangle_{[Y]}\,.$$

POVMs to computational basis measurements of subsets of qubits are constructed as products with delta tensors on the non-measured qubits.

3 Function Encoding

We investigate how Boolean functions can be encoded in quantum states using computation circuits.

Using the computation circuit we can prepare two function encoding schemes, depending on the start state.

3.1 Basis encoding

Definition 1. *The basis encoding of a boolean function f is the state*

$$\psi_f^{\text{bas}}\left[X_{[d]}, Y\right] = \sqrt{\frac{1}{2^d}} \sum_{x_{[d]}\in\times_{k\in[d]}[2]} \epsilon_{x_{[d]}}\left[X_{[d]}\right] \otimes \epsilon_{f(x_{[d]})}\left[Y\right]\,.$$

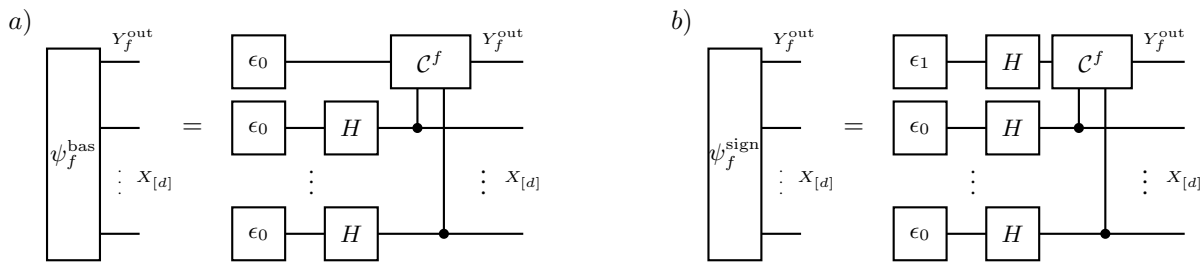

Figure 3: Construction of the basis encoding state (a) and the sign encoding state (b) using the computation circuit of a function.

Lemma 1. *When applying the computation circuit on the initial state*

$$\sqrt{\frac{1}{2^d}}\mathbb{I}\left[X_{[d]}\right] \otimes \epsilon_0\left[Y\right]$$

we get the basis encoding state (see Figure 3a).

Proof. Since the Pauli-X turns ϵ_0 into ϵ_1, and is applied exactly when $f(x_{[d]}) = 1$. □

Corollary 1. *Using Lem.* **??** *we have*

$$\psi_f^{\text{bas}}\left[X_{[d]}, Y\right] = \sqrt{\frac{1}{2^d}}\beta^f\left[X_{[d]}, Y\right]$$

The initial state can be prepared by applying Hadamard gates on all distributed variable qubits and preparing the head variable qubit in the ground state. The overlap of two basis encoding states (which share the same head variable) is proportional to the contraction of the corresponding formulas.

Lemma 2. *Let $f, \tilde{f}$ be two Boolean formulas on the states of $X_{[d]}$. Then we have*

$$\left\langle \psi_f^{\text{bas}}\left[X_{[d]}, Y\right], \psi_h^{\text{bas}}\left[X_{[d]}, Y\right]\right\rangle_{[\varnothing]} = \frac{1}{2^d}\left\langle f\left[X_{[d]}\right], \tilde{f}\left[X_{[d]}\right]\right\rangle_{[\varnothing]} .$$

Proof. We have

$$\begin{aligned}\left\langle \psi_f^{\text{bas}}\left[X_{[d]}, Y\right], \psi_h^{\text{bas}}\left[X_{[d]}, Y\right]\right\rangle_{[\varnothing]} &= \frac{1}{2^d}\sum_{x_{[d]}\in[2]^d}\left\langle \epsilon_{f\left[X_{[d]}=x_{[d]}\right]}\left[Y\right], \epsilon_{\tilde{f}\left[X_{[d]}=x_{[d]}\right]}\left[Y\right]\right\rangle_{[\varnothing]} \\ &= \frac{1}{2^d}\left\langle f\left[X_{[d]}\right], \tilde{f}\left[X_{[d]}\right]\right\rangle_{[\varnothing]} .\end{aligned}$$

□

3.2 Sign encoding

Definition 2. *The sign encoding of a boolean function f is the state*

$$\psi_f^{\text{sign}}\left[X_{[d]}, Y\right] = \left(\sqrt{\frac{1}{2^d}}\sum_{x_{[d]}\in\times_{k\in[d]}[2]}(-1)^{f(x_{[d]})}\cdot\epsilon_{x_{[d]}}\left[X_{[d]}\right]\right)\otimes\sqrt{\frac{1}{2}}\left(\epsilon_0\left[Y\right] - \epsilon_1\left[Y\right]\right) .$$

Sign encodings can be prepared by the phase kickback trick, as we show next.

Lemma 3 (Phase kickback trick)**.** *Applying the computation circuit $\mathcal{C}^f\left[Y^{\text{in}}, Y^{\text{out}}, X_{[d]}\right]$ on a state*

$$\psi\left[X_{[d]}\right]\otimes\epsilon^-\left[A^{\text{in}}\right]$$

we get

$$\sum_{x_{[d]}\in\times_{k\in[d]}[m_k]}(-1)^{f(x_{[d]})}\psi\left[X_{[d]} = x_{[d]}\right]\cdot\epsilon_{x_{[d]}}\left[X_{[d]}\right]\otimes\epsilon^-\left[A^{\text{out}}\right] .$$

Proof. We get a disentangled ancilla qubit, because $\epsilon^{-}\left[A^{\text{in}}\right]$ is an eigenvector of the identity and the Pauli-X. For the identity, which is applied when $f(x_{[d]}) = 0$, the eigenvalue is 1. For the Pauli-X, which is applied when $f(x_{[d]}) = 0$, the eigenvalue is (-1). □

We get the sign encoding with the phase kickback trick, when we initialize with the q-sample of the uniform distribution.

Corollary 2. *When applying the computation circuit on the initial state*

$$\sqrt{\frac{1}{2^d}}\mathbb{I}\left[X_{[d]}\right] \otimes \sqrt{\frac{1}{2}}\left(\epsilon_0\left[Y\right] - \epsilon_1\left[Y\right]\right)$$

we get the sign encoding state (see Figure 3b). Note that the initial state is a Hadamard gate acting on the state $\epsilon_1\left[Y\right]$.

The sign encoding is also called the phase encoding. One can ask, whether we can use other ancilla states and get different phase kickbacks while keeping the ancilla disentangled. However, since we construct here computation circuit we are restricted to the eigenvectors of the Pauli-X gate, which is the Hadamard basis

$$\epsilon^{-}\left[Y\right] = \sqrt{\frac{1}{2}}\left(\epsilon_0\left[Y\right] - \epsilon_1\left[Y\right]\right) \quad , \quad \epsilon^{+}\left[Y\right] = \sqrt{\frac{1}{2}}\left(\epsilon_0\left[Y\right] + \epsilon_1\left[Y\right]\right)$$

with eigenvalues (-1) and 0.

The initial state can be prepared by applying Hadamard gates on all distributed variable qubits and preparing the head variable qubit by applying a Hadamard gate on the first basis state, i.e.

$$\frac{1}{\sqrt{2}}\left(\epsilon_1\left[Y_{\text{out}}\right] - \epsilon_0\left[Y_{\text{out}}\right]\right) = H\left[Y_{\text{out}}, Y_{\text{in}}\right]\epsilon_0\left[Y_{\text{in}}\right] \ ,$$

Lemma 4. *Let $f, \tilde{f}$ be two Boolean formulas on the states of $X_{[d]}$. Then we have*

$$\left\langle \psi_f^{\text{sign}}\left[X_{[d]}, Y\right], \psi_h^{\text{sign}}\left[X_{[d]}, Y\right]\right\rangle_{[\varnothing]} = \frac{1}{2^d}\left(\left\langle f\left[X_{[d]}\right], \tilde{f}\left[X_{[d]}\right]\right\rangle_{[\varnothing]} - \left\langle f\left[X_{[d]}\right], \neg\tilde{f}\left[X_{[d]}\right]\right\rangle_{[\varnothing]}\right) .$$

Proof. We have

$$\begin{aligned}
\left\langle \psi_f^{\text{sign}}\left[X_{[d]}, Y\right], \psi_h^{\text{sign}}\left[X_{[d]}, Y\right]\right\rangle_{[\varnothing]} &= \frac{1}{2^d}\sum_{x_{[d]}\in[2]^d}(-1)^{f\left[X_{[d]}=x_{[d]}\right]+\tilde{f}\left[X_{[d]}=x_{[d]}\right]} \\
&= \frac{1}{2^d}\sum_{x_{[d]}\in[2]^d\,:\,f\left[X_{[d]}=x_{[d]}\right]=\tilde{f}\left[X_{[d]}=x_{[d]}\right]} 1 + \sum_{x_{[d]}\in[2]^d\,:\,f\left[X_{[d]}=x_{[d]}\right]\neq\tilde{f}\left[X_{[d]}=x_{[d]}\right]} (-1) \\
&= \frac{1}{2^d}\left(\left\langle f\left[X_{[d]}\right], \tilde{f}\left[X_{[d]}\right]\right\rangle_{[\varnothing]} - \left\langle f\left[X_{[d]}\right], \neg\tilde{f}\left[X_{[d]}\right]\right\rangle_{[\varnothing]}\right) .
\end{aligned}$$

□

Limitations:

- The prepared state ψ_f^{sign} is distinguished from the state $\psi_{\neg f}^{\text{sign}}$ only by a non-observable phase factor
$$\psi_f^{\text{sign}} = (-1)\cdot\psi_{\neg f}^{\text{sign}}$$
- With this construction the statistic qubit is disentangled with the distributed qubits. Further manipulation of the statistic qubits alone (as we do with activation circuits) will not retrieve any information about the encoded function.
- When doing the sign encoding procedure for multiple formulas, we get a disentangled state of the head variables with the distributed variables encoded in the sign encoding state of $\bigoplus_{f\in\mathcal{F}} f$ (where by $\bigoplus$ we denote the mod2 sum of boolean functions).

4 Contractions based on Transforms

Walsh-Hadamard transform and further transforms can be efficiently implemented by quantum circuits. We here investigate how these transforms can be utilized to compute contractions of tensor networks.

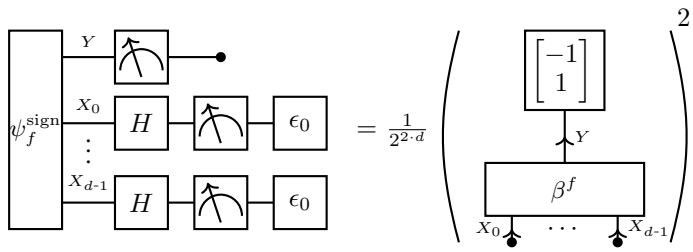

Figure 4: Measurement setup for the Deutsch-Jozsa algorithm on the formula f.

4.1 Walsh-Hadamard transform

The application of Hadamard gates on the distributed variables afterwards results in a Walsh-Hadamard transform of the prepared state.

The transform is performed by applying Hadamard gates on each variable. This is equivalent with contraction of the tensor

$$H^d \left[X_{[d],\text{in}}, X_{[d],\text{out}}\right] = \bigotimes_{k\in[d]} H \left[X_k^{\text{in}}, X_k^{\text{out}}\right] ,$$

which coordinates are

$$H^d \left[X_{[d],\text{in}} = x_{[d],\text{in}}, X_{[d],\text{out}} = x_{[d],\text{out}}\right] = \sqrt{\frac{1}{2^d}} \left(-1\right)^{\sum_{k\in[d]} x_{k,\text{in}} \cdot x_{k,\text{out}}} .$$

We have

$$\left\langle \epsilon_0 \left[X^{\text{in}}\right], H \left[X^{\text{in}}, X^{\text{out}}\right]\right\rangle_{[X^{\text{out}}]} = \sqrt{\frac{1}{2}} \mathbb{I} \left[X^{\text{out}}\right]$$
$$\left\langle \epsilon_1 \left[X^{\text{in}}\right], H \left[X^{\text{in}}, X^{\text{out}}\right]\right\rangle_{[X^{\text{out}}]} = \sqrt{\frac{1}{2}} \begin{bmatrix} 1 \\ -1 \end{bmatrix} \left[X^{\text{out}}\right]$$

and conversely

$$\left\langle \sqrt{\frac{1}{2}} \mathbb{I} \left[X^{\text{in}}\right], H \left[X^{\text{in}}, X^{\text{out}}\right]\right\rangle_{[X^{\text{out}}]} = \epsilon_0 \left[X^{\text{out}}\right]$$
$$\left\langle \sqrt{\frac{1}{2}} \begin{bmatrix} 1 \\ -1 \end{bmatrix} \left[X^{\text{in}}\right], H \left[X^{\text{in}}, X^{\text{out}}\right]\right\rangle_{[X^{\text{out}}]} = \epsilon_1 \left[X^{\text{out}}\right] .$$

If and only if the function is constant, then the transformed state is the ground state.

4.2 Examples

Let us present two known algorithms as the measurement of states prepared by computation circuits.

Example 1 (Deutsch-Jozsa Test)**.** *We measure the probability of the ground state of the sign encoding after a Walsh-Hadamard transform. The probability of measuring the ground state after a Walsh-Hadamard transform of the distributed qubits is then*

$$\frac{1}{2^d} \cdot \left\langle \left| \left\langle \psi_f^{\text{sign}} \left[X_{[d]}, Y\right]\right\rangle_{[Y]} \right|^2 \right\rangle_{[\varnothing]} = \frac{1}{2^{2\cdot d}} \left(\langle f\rangle_{[\varnothing]} - \langle \neg f\rangle_{[\varnothing]}\right)^2 .$$

Thus, if and only if the probability of the ground state is 1*, we have that the formula is constant, that is* $f \in \{\top, \bot\}$*. This is the Deutsch-Josza algorithm Deutsch and Jozsa (1992).*

Example 2 (Inversion Test)**.** *Concatenating the computation circuits to two formulas* f *and* h *prepares the state*

$$\psi_{f\oplus h}^{\text{bas}} \left[X_{[d]}, Y\right]$$

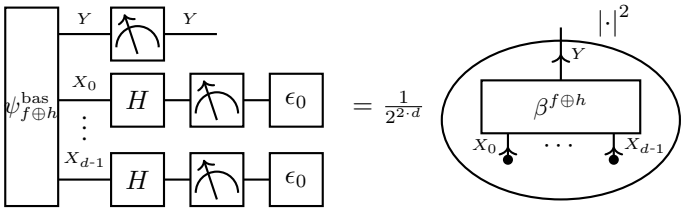

Figure 5: Measurement setup for the inversion test on the formulas f and h. We measure the probability of the statistic qubit Y, when the distributed qubits $X_{[d]}$ are in the ground state after a Walsh-Hadamard transform. This is equal to a scaled and squared contraction of the basis encoding to the formula $f \oplus h$.

The probability of measuring the ground state after a Walsh-Hadamard transform of the distributed qubits (see Figure 5) is then

$$\begin{aligned}\frac{1}{2^d}\left|\left\langle \psi^{\text{bas}}_{f\oplus h}\left[X_{[d]}, Y\right]\right\rangle_{[Y]}\right|^2 &= \frac{1}{2^{2\cdot d}}\left[\left\langle f\oplus h\right\rangle_{[\varnothing]}\left\langle \neg(f\oplus h)\right\rangle_{[\varnothing]}\right] \\ &= \frac{1}{2^{2\cdot d}}\begin{bmatrix}\#\left\{x_{[d]}\in \bigtimes_{k\in[d]}[2] \,:\, f\left[X_{[d]}=x_{[d]}\right]=h\left[X_{[d]}=x_{[d]}\right]\right\} \\ \#\left\{x_{[d]}\in \bigtimes_{k\in[d]}[2] \,:\, f\left[X_{[d]}=x_{[d]}\right]\neq h\left[X_{[d]}=x_{[d]}\right]\right\}\end{bmatrix}.\end{aligned}$$

The second equation holds since $\neg(f \oplus h)$ is equivalent with the biconditional $f \Leftrightarrow h$.

This is in more generality the inversion test of measuring the overlap of ψ^{bas}_f with ψ^{bas}_h (see Schuld and Petruccione (2021)). Here we used that the computation circuit is self-adjoint and understand the concatenation as the unitaries preparing ψ^{bas}_f and the adjoint (together with the Walsh-Hadamard transform) of ψ^{bas}_h.

Quantum Circuits such as the SWAP test and the Hadamard test ((Schuld and Petruccione, 2021, Section 3.6.1)) can be used to measure overlaps of quantum states, which are the squared absolutes of contractions of two state tensors.

- When we have preparation schemes for two tensors, we can control them with a common ancilla qubit and measure their contraction by a Hadamard test (alternatively, using the SWAP test and state preparation in two registers).
- Can we extend these schemes to contractions of more general tensor networks?

While the preparation of contracted basis encodings is done efficiently, accessing the prepared state by measurements is a bottleneck. This is a typical *quantum state tomography* problem Roth et al. (2023). Sparsity of the contracted state can be exploited to probabilistically guarantee precise estimates Gross et al. (2010). However, when deciding whether f is satisfiable, based on the prepared contraction $\sqrt{\left\langle \beta^f\left[Y, X_{[d]}\right]\right\rangle_{[Y|\varnothing]}}$, we have an exponentially small error tolerance. Moreover, the applied sample mean is the UMVUE (Uniformly Minimum Variance Unbiased Estimator, see Casella and Berger (2001)), and can thus not be improved by other unbiased estimators.

5 Extension: Sampling from proposal distributions

We can prepare basis circuit encodings to selection augmented formulas, in this way introducing formula selecting networks.

Idea for an inductive reasoning scheme: Prepare a q-sample from the empirical distribution and the current distribution. Then prepare the basis circuit encodings, where the selection variables are shared and the distributed variables assigned to the prepared samples. Now, the ancilla qubits can be designed to ϵ_1 and ϵ_0 accordingly. The rejection sampling scheme on both ancillas being 1 and the measurement of L prepares then the distribution

$$\left\langle \left\langle \mathbb{P}^D\left[X_{[d]}\right], \sigma^t\left[X_{[d]}, L\right]\right\rangle_{[L]}, \left\langle \tilde{\mathbb{P}}\left[X_{[d]}\right]\right\rangle_{[L]}\right\rangle_{[L|\varnothing]}$$

That is, the probability of selecting ℓ is proportional to

$$\mu_D\left[L=\ell\right]\cdot\left(1-\tilde{\mu}\left[L=\ell\right]\right)$$

and thus prefers formulas, which have a large empirical mean, but a small current mean.

Open Question: Since the distribution is "similar" to $\exp\left[\mu_D\left[L=\ell\right]-\tilde{\mu}\left[L=\ell\right]\right)]$ (terms appear in Taylor of first order), can we tune the distribution with an inverse temperature parameter β?

References

Israel F. Araujo, Carsten Blank, Ismael CS Araújo, and Adenilton J. da Silva. Low-rank quantum state preparation. *IEEE Transactions on Computer-Aided Design of Integrated Circuits and Systems*, 43(1):161–170, 2023. URL https://ieeexplore.ieee.org/abstract/document/10190145/.

George Casella and Roger Berger. *Statistical Inference*. Cengage Learning, Pacific Grove, Calif, June 2001. ISBN 978-0-534-24312-8.

David Deutsch and Richard Jozsa. Rapid solution of problems by quantum computation. *Proceedings of the Royal Society of London. Series A: Mathematical and Physical Sciences*, 439(1907):553–558, December 1992. ISSN 0962-8444. doi: 10.1098/rspa.1992.0167. URL https://doi.org/10.1098/rspa.1992.0167.

David Gross, Yi-Kai Liu, Steven T. Flammia, Stephen Becker, and Jens Eisert. Quantum State Tomography via Compressed Sensing. *Physical Review Letters*, 105(15):150401, October 2010. doi: 10.1103/PhysRevLett.105.150401. URL https://link.aps.org/doi/10.1103/PhysRevLett.105.150401.

Lov Grover and Terry Rudolph. Creating superpositions that correspond to efficiently integrable probability distributions, August 2002. URL http://arxiv.org/abs/quant-ph/0208112. arXiv:quant-ph/0208112.

Aram W. Harrow, Avinatan Hassidim, and Seth Lloyd. Quantum Algorithm for Linear Systems of Equations. *Physical Review Letters*, 103(15):150502, October 2009. doi: 10.1103/PhysRevLett.103.150502. URL https://link.aps.org/doi/10.1103/PhysRevLett.103.150502.

Steven Herbert. No quantum speedup with Grover-Rudolph state preparation for quantum Monte Carlo integration. *Physical Review E*, 103(6):063302, June 2021. doi: 10.1103/PhysRevE.103.063302. URL https://link.aps.org/doi/10.1103/PhysRevE.103.063302.

Mikko Möttönen, Juha J. Vartiainen, Ville Bergholm, and Martti M. Salomaa. Transformation of quantum states using uniformly controlled rotations. *Quantum Info. Comput.*, 5(6):467–473, September 2005. ISSN 1533-7146.

John Preskill. Quantum Computing in the NISQ era and beyond. *Quantum*, 2:79, August 2018. doi: 10.22331/q-2018-08-06-79. URL https://quantum-journal.org/papers/q-2018-08-06-79/.

Ingo Roth, Jadwiga Wilkens, Dominik Hangleiter, and Jens Eisert. Semi-device-dependent blind quantum tomography. *Quantum*, 7:1053, July 2023. doi: 10.22331/q-2023-07-11-1053. URL https://quantum-journal.org/papers/q-2023-07-11-1053/.

Manuel S. Rudolph, Jing Chen, Jacob Miller, Atithi Acharya, and Alejandro Perdomo-Ortiz. Decomposition of matrix product states into shallow quantum circuits. *Quantum Science and Technology*, 9(1):015012, 2023a. URL https://iopscience.iop.org/article/10.1088/2058-9565/ad04e6/meta.

Manuel S. Rudolph, Jacob Miller, Danial Motlagh, Jing Chen, Atithi Acharya, and Alejandro Perdomo-Ortiz. Synergistic pretraining of parametrized quantum circuits via tensor networks. *Nature Communications*, 14(1):8367, 2023b. URL https://www.nature.com/articles/s41467-023-43908-6.

Aaron Sander, Maximilian Fröhlich, Mazen Ali, Martin Eigel, Jens Eisert, Michael Hintermüller, Christian B. Mendl, Richard M. Milbradt, and Robert Wille. Quantum circuit simulation with a local time-dependent variational principle, August 2025a. URL http://arxiv.org/abs/2508.10096. arXiv:2508.10096 [quant-ph].

Aaron Sander, Maximilian Fröhlich, Martin Eigel, Jens Eisert, Patrick Gelß, Michael Hintermüller, Richard M. Milbradt, Robert Wille, and Christian B. Mendl. Large-scale stochastic simulation of open quantum systems. *Nature Communications*, 16(1):11074, December 2025b. ISSN 2041-1723. doi: 10.1038/s41467-025-66846-x. URL http://arxiv.org/abs/2501.17913. arXiv:2501.17913 [quant-ph].

Maria Schuld and Francesco Petruccione. *Machine Learning with Quantum Computers*. Springer, Cham, October 2021. ISBN 978-3-030-83097-7.

Vivek V. Shende, Stephen S. Bullock, and Igor L. Markov. Synthesis of Quantum Logic Circuits. *IEEE Transactions on Computer-Aided Design of Integrated Circuits and Systems*, 25(6):1000–1010, June 2006. ISSN 0278-0070, 1937-4151. doi: 10.1109/TCAD.2005.855930. URL http://arxiv.org/abs/quant-ph/0406176. arXiv:quant-ph/0406176.