Tensor networks and quantum inference for neuro-symbolic AI

Alex Goessmann
joint work with Janina Schütte, Maximilian Fröhlich and Martin Eigel
arXiv : 2601.15442

Weierstraß Institute for Applied Analysis and Stochastics (WIAS)

SIAM PP26 Conference - MS79
March 6, 2026

Outline

- Tensor networks in neuro-symbolic AI
- Quantum inference for neuro-symbolic AI

Outline

- Tensor networks in neuro-symbolic AI
- Quantum inference for neuro-symbolic AI

Motivation: Accounting Rule Systems

Example (Toy Accounting Rule System)

Assume you want to book one of two accounts $\mathrm{A1}$ and $\mathrm{A2}$ depending on a feature F of an invoice, based on two rules:

- Exactly one account must be booked.
- If feature F is present on the invoice, the account $\mathrm{A1}$ is typically booked.

- Accounting rules are formalised in propositional logics, triggered by receipts properties.
- These rules can either be hard restrictions, or prone to exceptions.

Tensor Networks are a suited framework to study neuro-symbolic use cases like this!

Tensors: A natural description of factored systems

Factored representations are collection of variables $X_{[d]}$, each with a finite set of states $[m_k] = \{0, \ldots, m_k - 1\}$ [RN21]. The set of states is then the cartesian product

$$\bigtimes_{k \in [d]} [m_k]$$

Knowledge about the systems statate, for example the probability of each state, is a tensor

$$\tau\left[X_{[d]}\right] \; : \; \bigtimes_{k \in [d]} [m_k] \to \mathbb{R}$$

We represent them by diagrams with legs decorated by the variables:

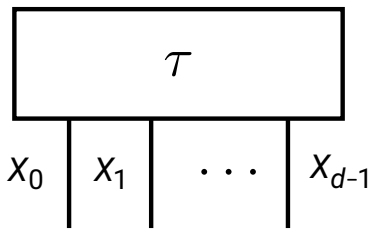

Model Sparsity by Tensor Network Decompositions

We encode functions between factored state sets by their basis encodings

$$\beta^q\left[Y_{[p]}, X_{[d]}\right] = \sum_{x_{[d]} \in \bigtimes_{k\in[d]}[m_k]} \epsilon_{q(x_{[d]})}\left[Y_{[p]}\right] \otimes \epsilon_{x_{[d]}}\left[X_{[d]}\right]$$

Main Sparsity Principle

Any decomposition of the function is reflected in a tensor network decomposition of the basis encoding.

Example: The basis encoding of $f\left[X_{[3]}\right] = (X_0 \vee X_1) \wedge \neg X_2$ is decomposed as:

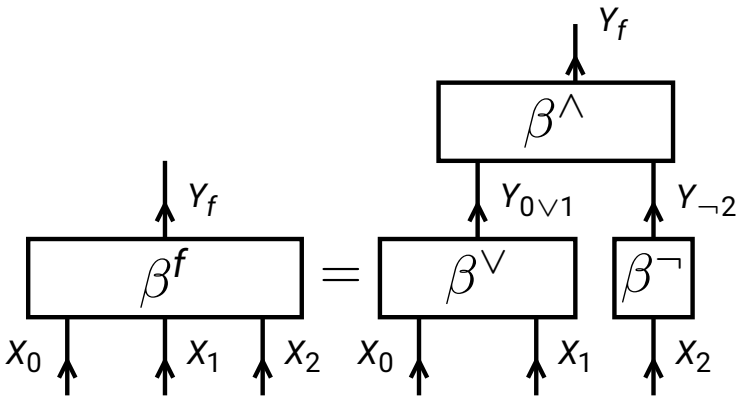

Computation-Activation Networks (CompActNets)

A novel tensor network architecture captures logical and probabilistic models (see [GSFE26]):

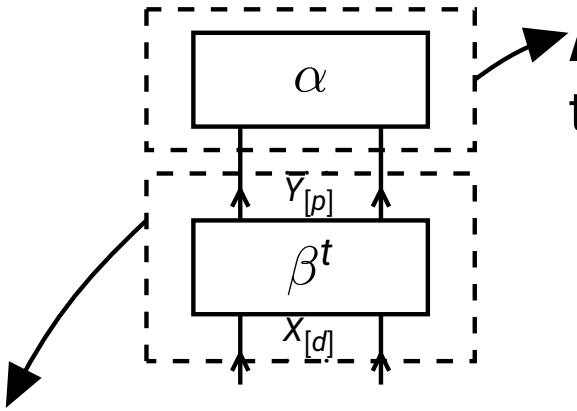

Activation of a statistic by an activation core, for knowledge bases

$$\alpha\left[Y_{[p]}\right] = \bigotimes_{\ell \in [p]} \begin{pmatrix} 0 \\ 1 \end{pmatrix} [Y_\ell]$$

and for exponential families

$$\alpha\left[Y_{[p]}\right] = \bigotimes_{\ell \in [p]} \begin{pmatrix} 1 \\ \exp\left[\theta\left[L = \ell\right]\right] \end{pmatrix} [Y_\ell]$$

Computation of a statistic

$$t : \bigtimes_{k \in [d]} [m_k] \to \bigtimes_{\ell \in [p]} [p_\ell]$$

by basis encoding

Toy Accounting Problem as a CompActNet

We represent the toy accounting model as a Computation-Activation Network with a trainable parameter $\theta \in \mathbb{R}$ enforcing the probabilistic second rule:

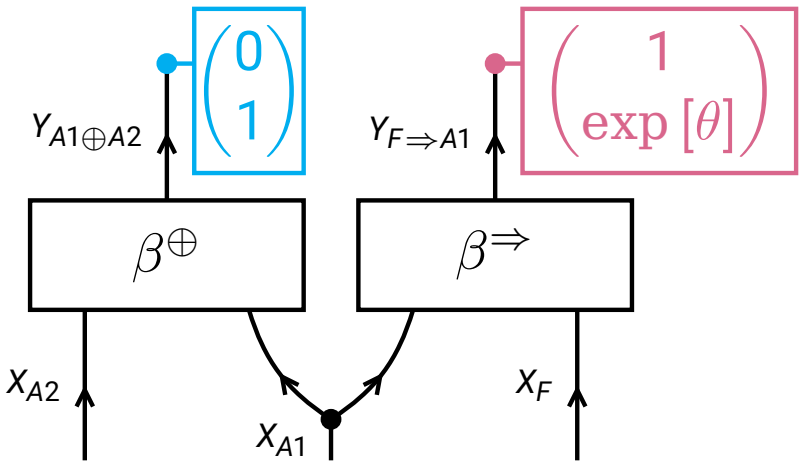

The contracted Computation-Activation Network is a tensor of order 3 in $\mathbb{R}^{2x2x2}$, with legs decorated by the variables X_{A1}, X_{A2}, X_F.

Inference by Contractions

Main Inference Principle

Model counts and marginal probabilities are contractions of tensor networks representing a model.

- Probabilistic Inference: Contract graphical models for marginals
- Logical Inference: Deciding entailment based on model counts

Example: Distribution of X_{A1} and X_{A2} conditioned on $X_F = 0$ is parallel to

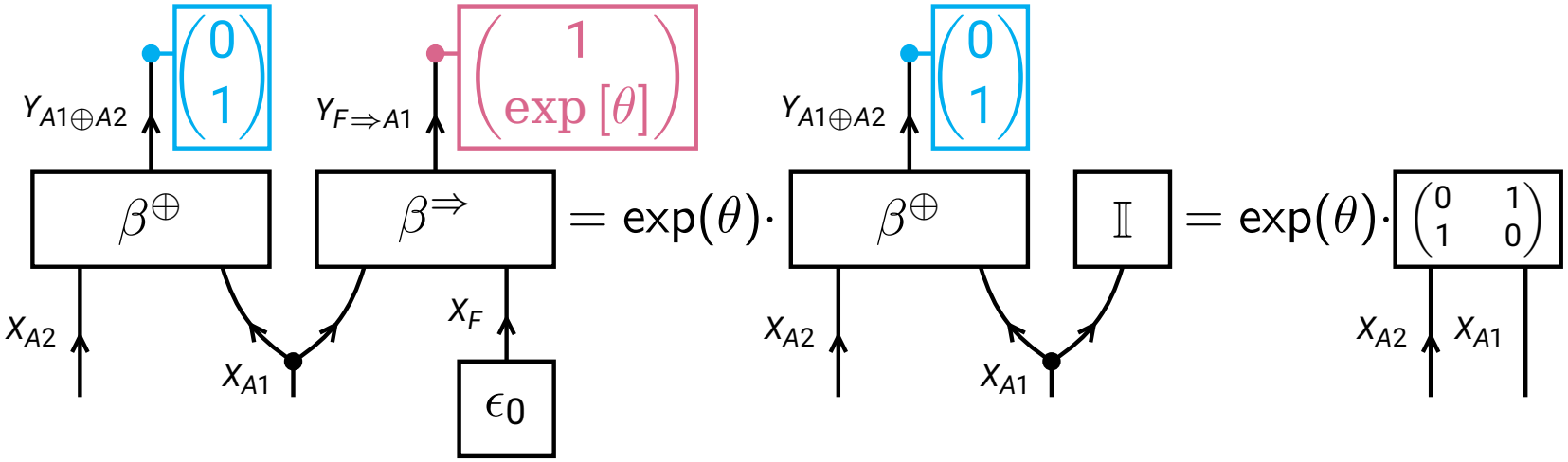

Tensor Networks for Neuro-Symbolic AI

Tensor Networks provide a unifying language to capture the different paradigms of AI [GSFE26]:

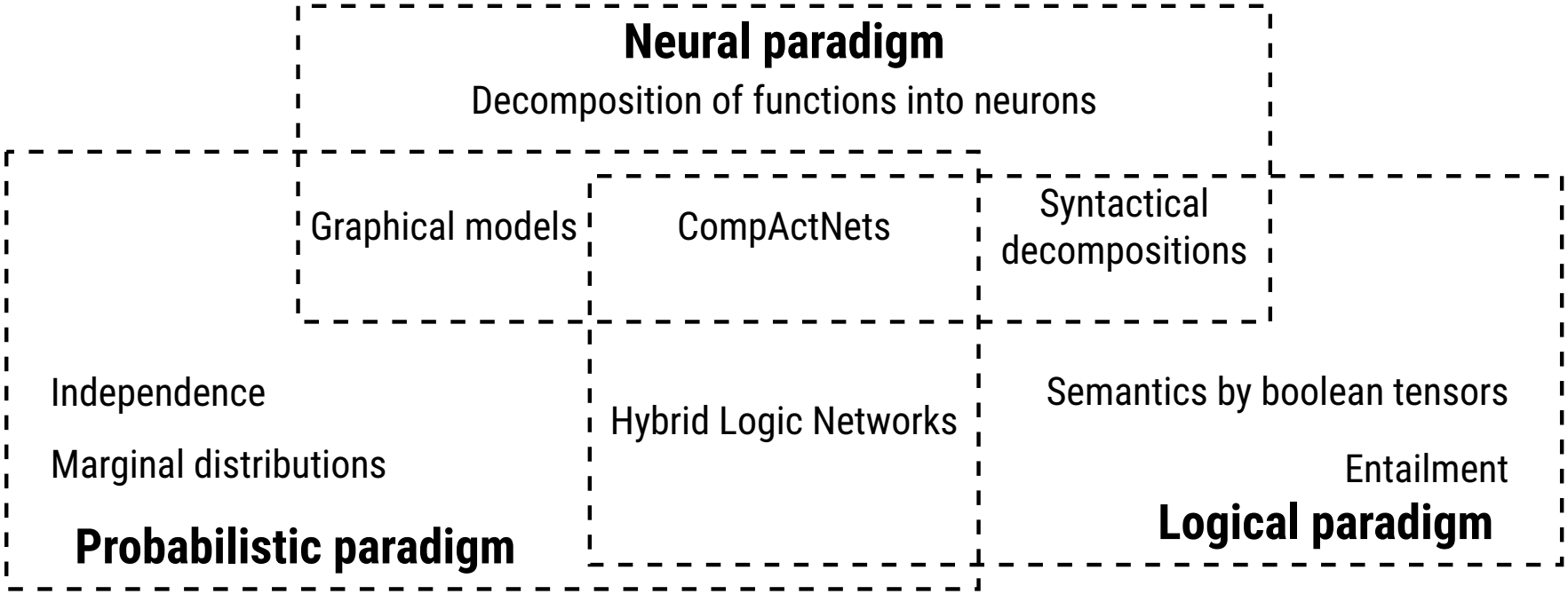

Outline

- Tensor networks in neuro-symbolic AI
- Quantum inference for neuro-symbolic AI

Motivation

Efficiency problem

Tensor network contractions are the workhorse of inference, but they are often computationally demanding.

Mitigate computational cost of contractions:

Get square root speedups through quantum inference.

The similarity of quantum circuits and tensor networks allows to apply quantum algorithms for inference tasks.

Quantum Rejection Sampling [LYC14]

Square root advantage over classical rejection sampling schemes.

Tensor Networks to Quantum Circuits

Oracles, namely by $X_{[d]}$ controlled unitaries acting as

$$\left\langle \mathcal{C}^f \left[Y_f^{\text{in}}, Y_f^{\text{out}}, X_{[d]} = x_{[d]}\right], \epsilon_0 \left[Y_f^{\text{in}}\right] \right\rangle_{\left[Y_f^{\text{out}}\right]} = \epsilon_{f(x_{[d]})} \left[Y_f^{\text{out}}\right]$$

relate with basis encodings of functions as:

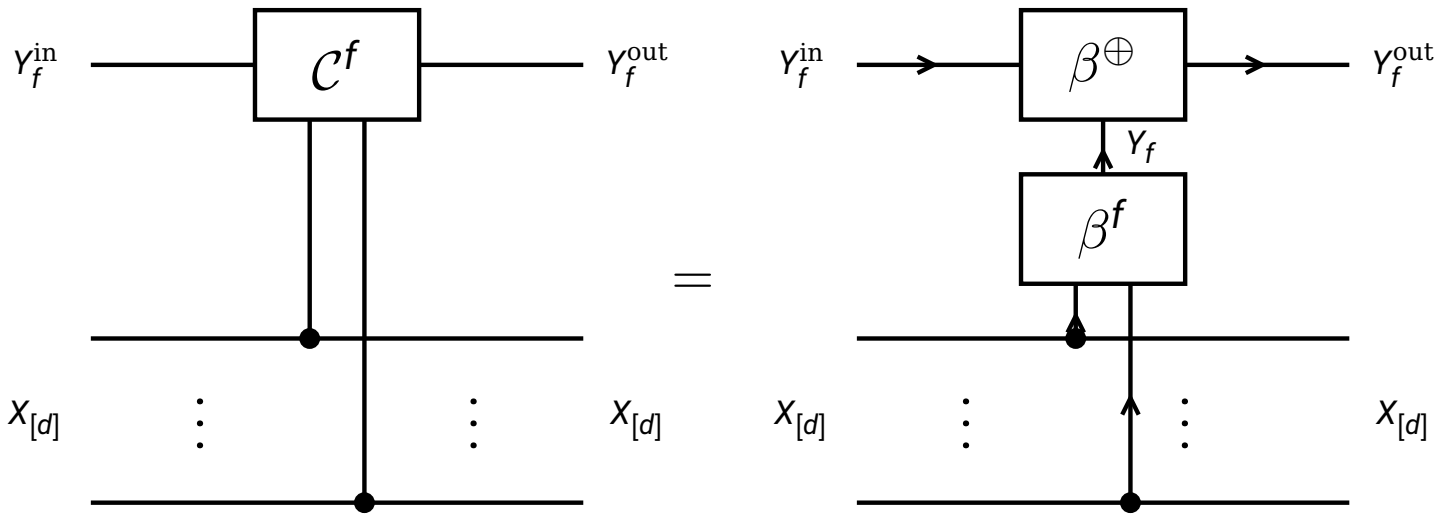

Same sparsity principles can be applied to get efficient quantum circuits for the oracles, and thus for the Grover operator.

Amplitude Amplification

Approach:

- Turn Computation-Activation Networks into (conditioned) Bayesian Network $\tilde{\mathbb{P}}[X_{[d]}, A_{[p]}]$, introducing ancilla variables $A_{[p]}$

$$\lambda \cdot \mathbb{P}\left[X_{[d]}\right] = \tilde{\mathbb{P}}[X_{[d]}, A_{[p]} = 1_{[p]}]\,.$$

- Prepare q-samples [LYC14], exploiting sparsity principles.
- Amplify the sample acceptance event $A_{[p]} = 1_{[p]}$ to improve the classical acceptance rate $\lambda \in (0, 1]$, by application of the Grover operator.

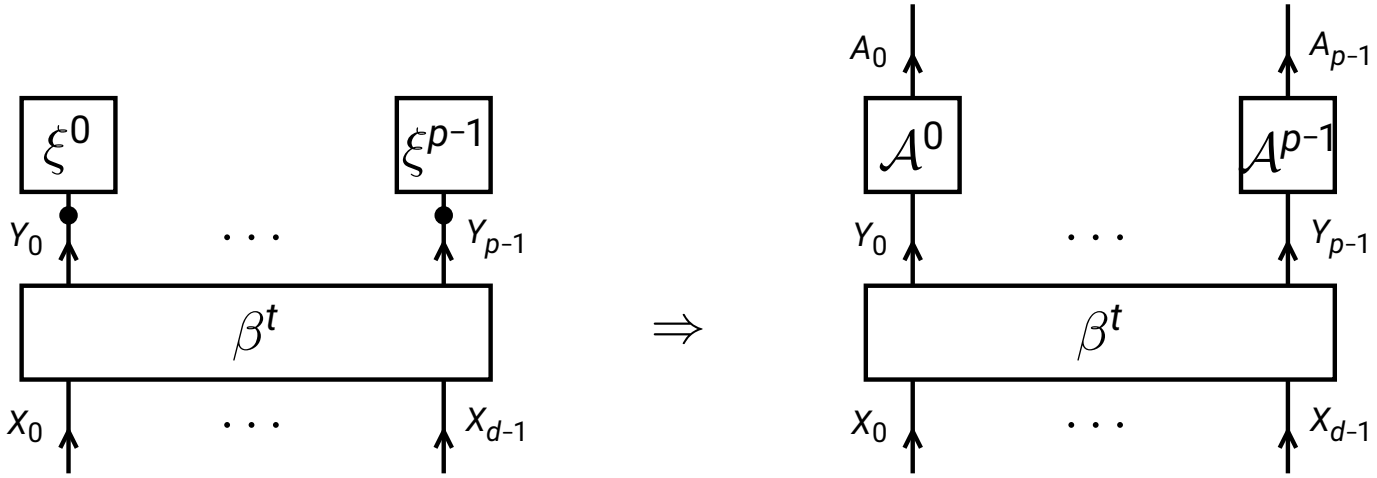

Q-sample the Toy Accounting Problem

For the toy accounting problem, we prepare a q-sample by the circuit:

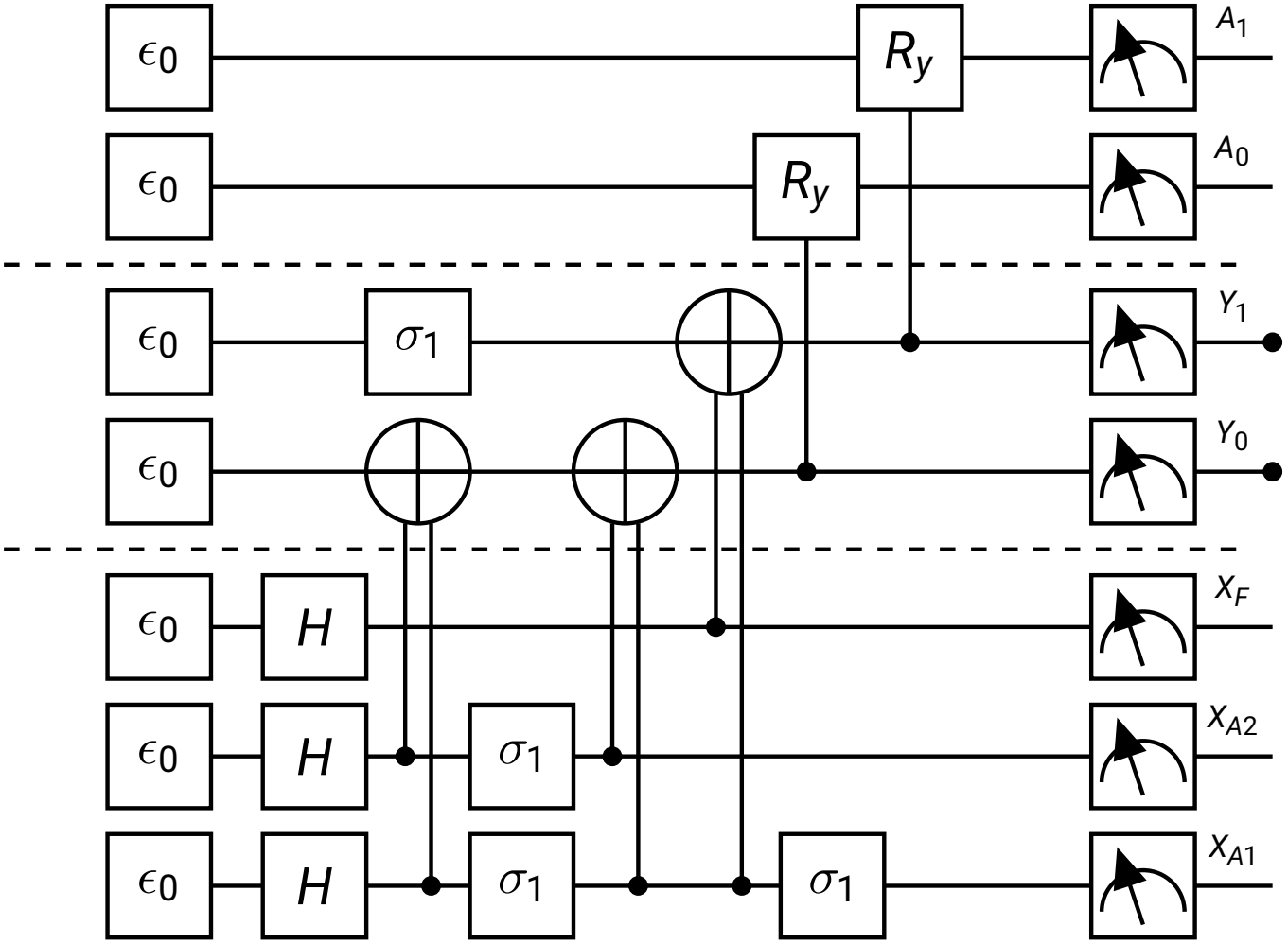

Summary and Outlook

Tensor Networks

- Tensors appear naturally as factored system representations
- Sparsity principle: Decomposition into tensor networks
- Inference principle: Tensor network contractions

Quantum Circuits

- Follow the same formalism and decomposition principles
- Allow for square root speedups for inference tasks

Implementations in python packages available:

- tnreason[1]: Tensor network based reasoning
- qcreason[2]: Quantum inference for contractions

[1] https://pypi.org/project/tnreason/
[2] https://pypi.org/project/qcreason/

References

[GSFE26] Alex Goessmann, Janina Schütte, Maximilian Fröhlich, and Martin Eigel.
A tensor network formalism for neuro-symbolic AI, January 2026.
arXiv:2601.15442 [cs].

[LYC14] Guang Hao Low, Theodore J. Yoder, and Isaac L. Chuang.
Quantum inference on Bayesian networks.
Physical Review A, 89(6):062315, June 2014.

[RN21] Stuart Russell and Peter Norvig.
Artificial Intelligence: A Modern Approach, Global Edition: A Modern Approach, Global Edition.
Pearson, Boston, 4 edition, May 2021.