# Tensor networks and quantum inference for neuro-symbolic AI

Alex Goessmann
joint work with Janina Schütte, Maximilian Fröhlich and Martin Eigel
arXiv : 2601.15442

Weierstraß Institute for Applied Analysis and Stochastics (WIAS)

SIAM PP26 Conference - MS79
March 6, 2026

# Motivation: Toy accounting rule system

## Toy accounting rule system

Assume you want to book one of two accounts $\mathrm{A1}$ and $\mathrm{A2}$ depending on a feature $\mathrm{F}$ of an invoice, based on two rules:

- Exactly one account must be booked.
- If feature $\mathrm{F}$ is present on the invoice, the account $\mathrm{A1}$ is typically booked.

- Accounting rules are formalised in propositional logics, triggered by receipts properties.
- These rules can either be hard restrictions, or prone to exceptions.

**We apply tensor networks for neuro-symbolic use cases like this!**

# Productive accounting rule systems

The variables and main relations of the DATEV accounting ontology[1]:

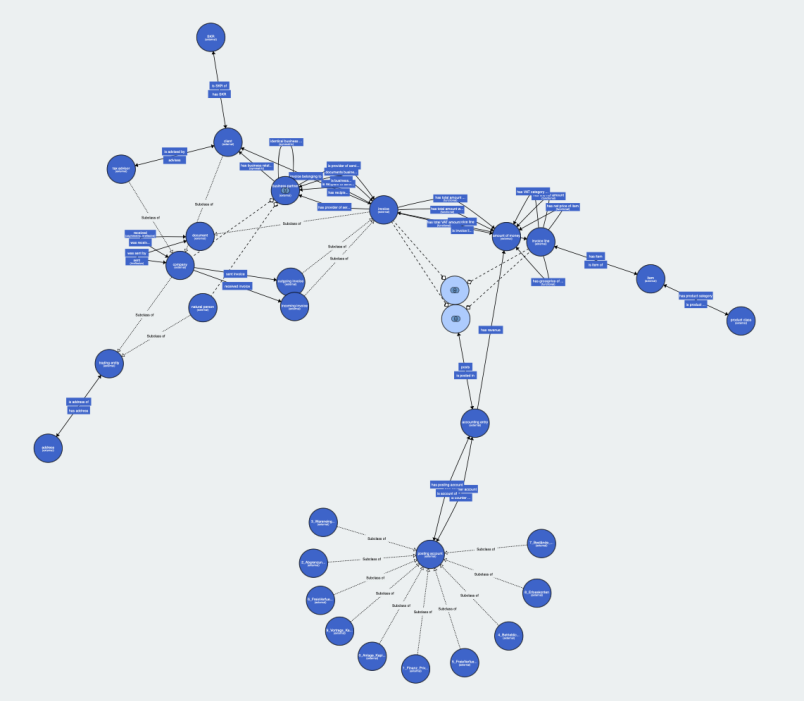

**Coarse Visualization**

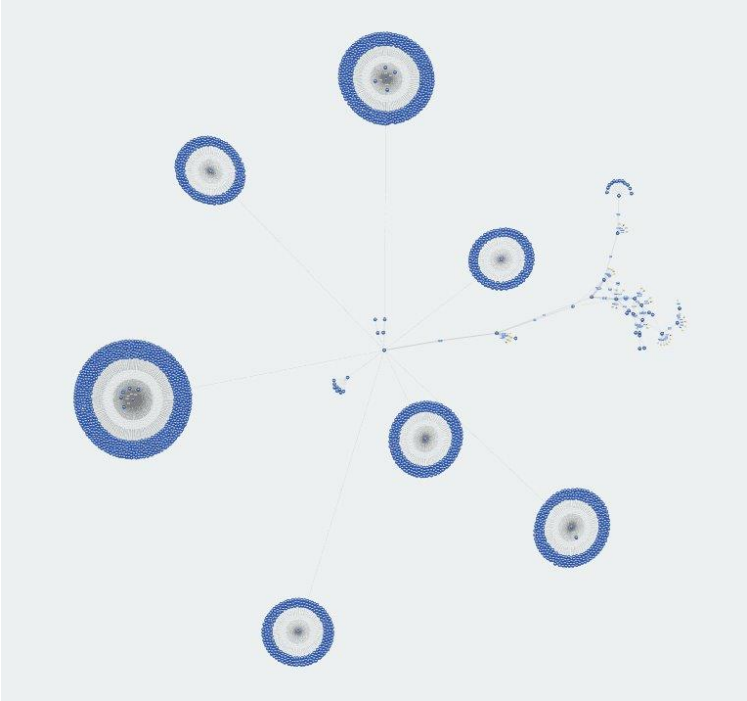

**Detailed Visualization**

[1] https://github.com/EnexaProject/enexa-use-case-1-business-software-solutions

# Tensors: Natural description of factored representations

**Factored representations** are collection of variables $X_{[d]}$, each with a finite set of states $[m_k] = \{0, \ldots, m_k - 1\}$ [RN21]. The set of states is then the cartesian product

$$\bigtimes_{k \in [d]} [m_k]$$

**Knowledge about the system**, for example the probability of each state, is a tensor

$$\tau\left[X_{[d]}\right] \; : \; \bigtimes_{k \in [d]} [m_k] \to \mathbb{R}$$

We represent them by diagrams with legs decorated by the variables:

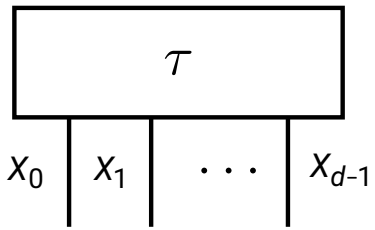

# Sparsity by tensor network decompositions

We represent functions between factored state sets by their basis encodings

$$\beta^f\left[Y_{[p]}, X_{[d]}\right] = \sum_{x_{[d]} \in \bigtimes_{k\in[d]}[m_k]} \epsilon_{f(x_{[d]})}\left[Y_{[p]}\right] \otimes \epsilon_{x_{[d]}}\left[X_{[d]}\right]$$

## Main sparsity principle

Any decomposition of a function is reflected in a tensor network decomposition of the basis encoding.

**Example:** The basis encoding of $f\left[X_{[3]}\right] = (X_0 \vee X_1) \wedge \neg X_2$ is decomposed as:

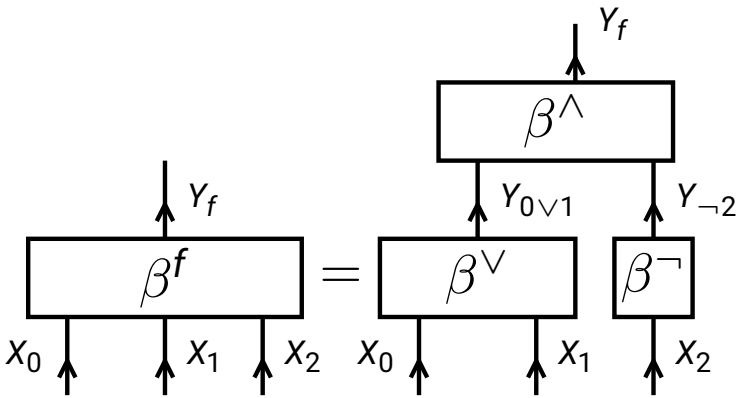

# Computation-Activation Networks (CompActNets)

A novel tensor network architecture captures logical and probabilistic models (see [GSFE26]):

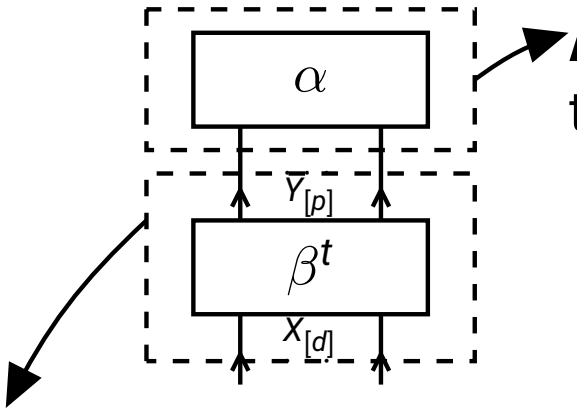


**Activation** of a statistic by an activation core, for knowledge bases

$$\alpha\left[Y_{[p]}\right] = \bigotimes_{\ell \in [p]} \begin{pmatrix} 0 \\ 1 \end{pmatrix} [Y_\ell]$$

and for exponential families

$$\alpha\left[Y_{[p]}\right] = \bigotimes_{\ell \in [p]} \begin{pmatrix} 1 \\ \exp\left[\theta\left[L = \ell\right]\right] \end{pmatrix} [Y_\ell]$$

**Computation** of a statistic

$$t : \bigtimes_{k \in [d]} [m_k] \to \bigtimes_{\ell \in [p]} [p_\ell]$$

by basis encoding

# Toy accounting system as a CompActNet

We represent the toy accounting system as a Computation-Activation Network:

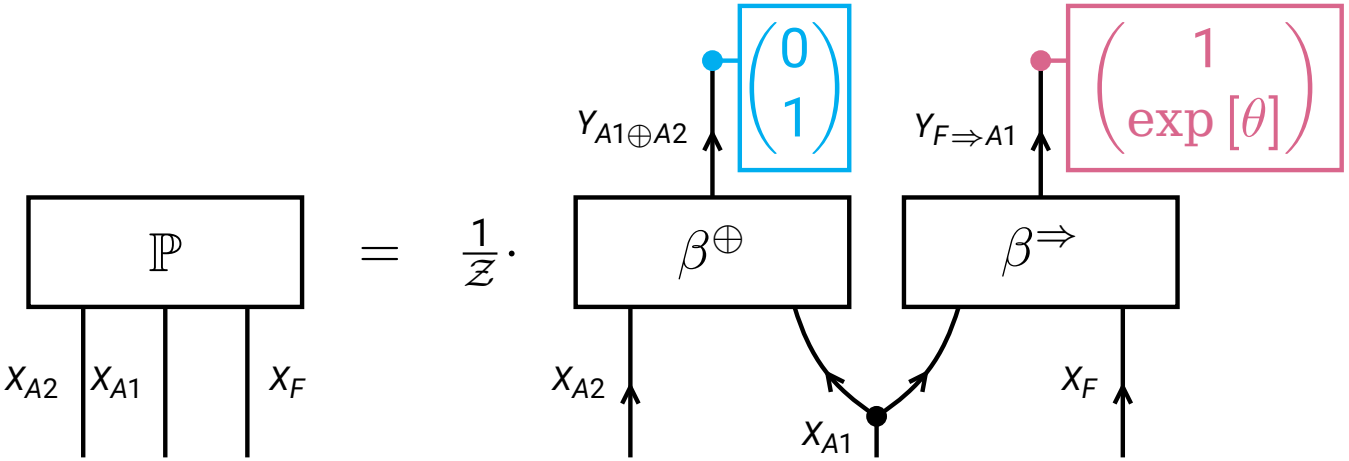


- The hard activation vector $\begin{pmatrix}0\\1\end{pmatrix}$ $[Y_{A1\oplus A2}]$ ensures that the first rule is always true.
- The soft activation vector $\begin{pmatrix}1\\ \exp[\theta]\end{pmatrix}$ $[Y_{F\oplus A1}]$ introduces the trainable parameter $\theta \in \mathbb{R}$ controlling the satisfaction probability of the second rule.

# Inference by Contractions

## Main inference principle

Model inference amounts to tensor network contractions.

- Probabilistic inference: Contractions are marginal probabilities.
- Logical inference: Contractions are model counts, which decide entailment.

**Example:** Distribution of $X_{A1}$ and $X_{A2}$ conditioned on $X_F = 0$ is parallel to

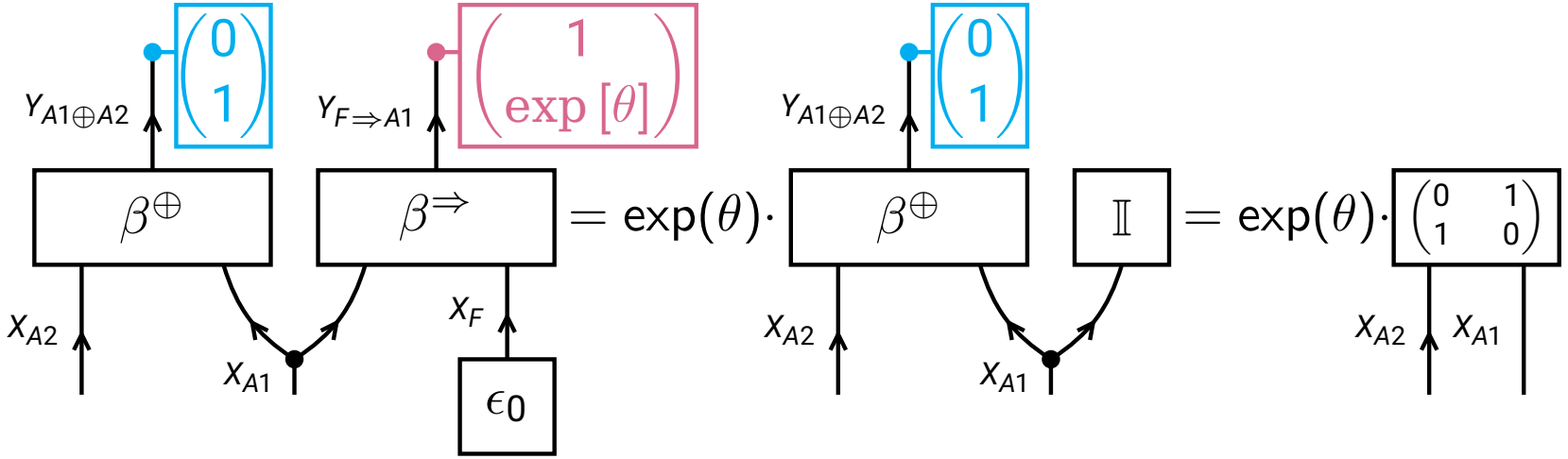

# Tensor networks for neuro-symbolic AI

Tensor networks provide a unifying language to capture the different paradigms of AI [GSFE26]:

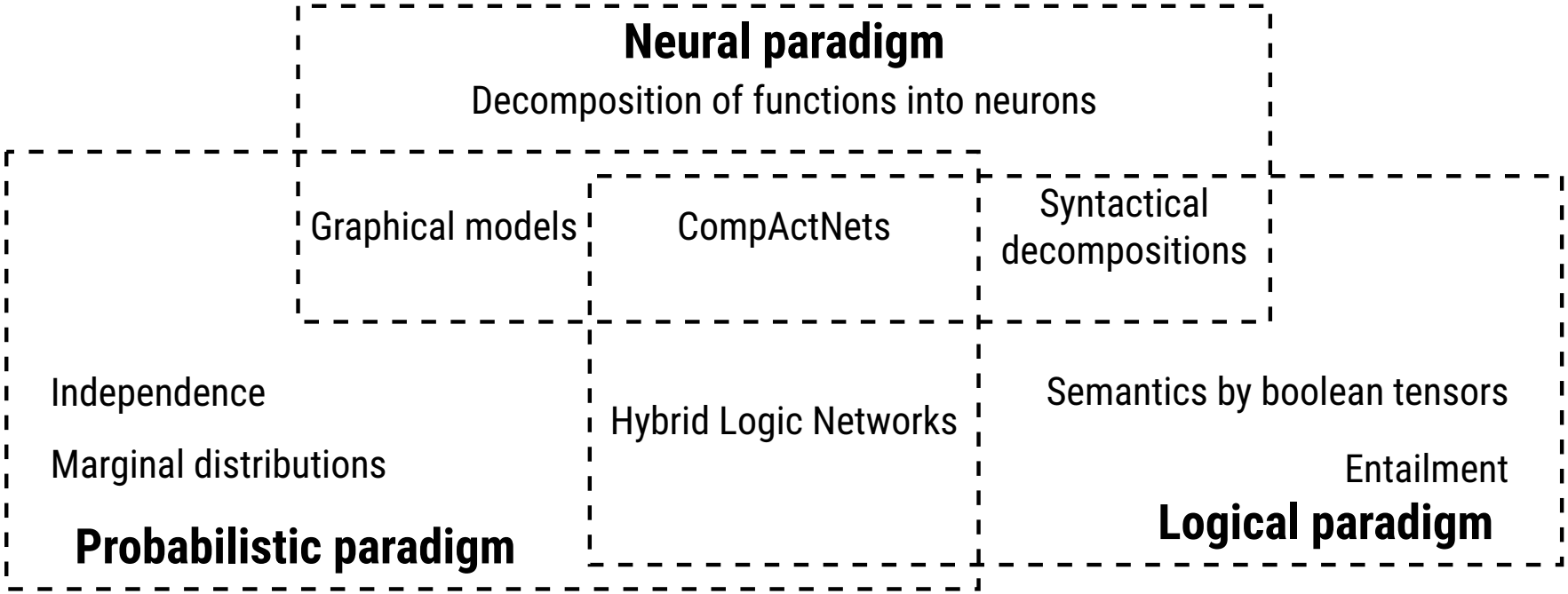

# Motivation for quantum inference

## Efficiency problem

Tensor network contractions are the workhorse of inference, but they are often computationally demanding.

The similarity of quantum circuits and tensor networks allows to apply quantum algorithms for inference.

**Advantage:** Square root speedups through quantum inference (provided that sparsity principles apply).

## Quantum Rejection Sampling [LYC14]

Amplify conditioned event by the Grover algorithm to improve the sample acceptance probability.

# From tensor networks to quantum circuits

The oracle to a boolean functions $f$ is the controlled unitary with slices to $x_{[d]} \in [2]^d$

$$\mathcal{C}^f \left[ Y_f^{\text{in}} = 0, Y_f^{\text{out}}, X_{[d]} = x_{[d]} \right] = \epsilon_{f(x_{[d]})} \left[ Y_f^{\text{out}} \right] .$$

**Connection:** Oracles relate with basis encodings of functions as:

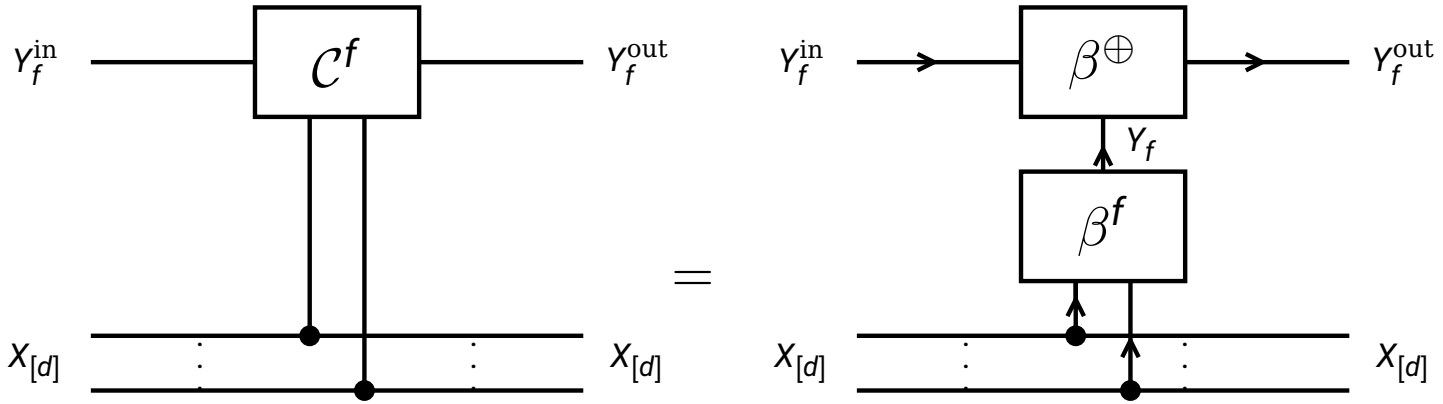


The same sparsity principles can thus be applied to get efficient quantum circuits for the oracles.

# Amplitude amplification

**Approach:**

- Turn CompActNets into (conditioned) Bayesian Network $\tilde{\mathbb{P}}[X_{[d]}, A_{[p]}]$ satisfying $\lambda \cdot \mathbb{P}\left[X_{[d]}\right] = \tilde{\mathbb{P}}[X_{[d]}, A_{[p]} = 1_{[p]}]$ for a sample acceptance rate $\lambda \in (0, 1]$. For an CompActNet with elementary activation, this is

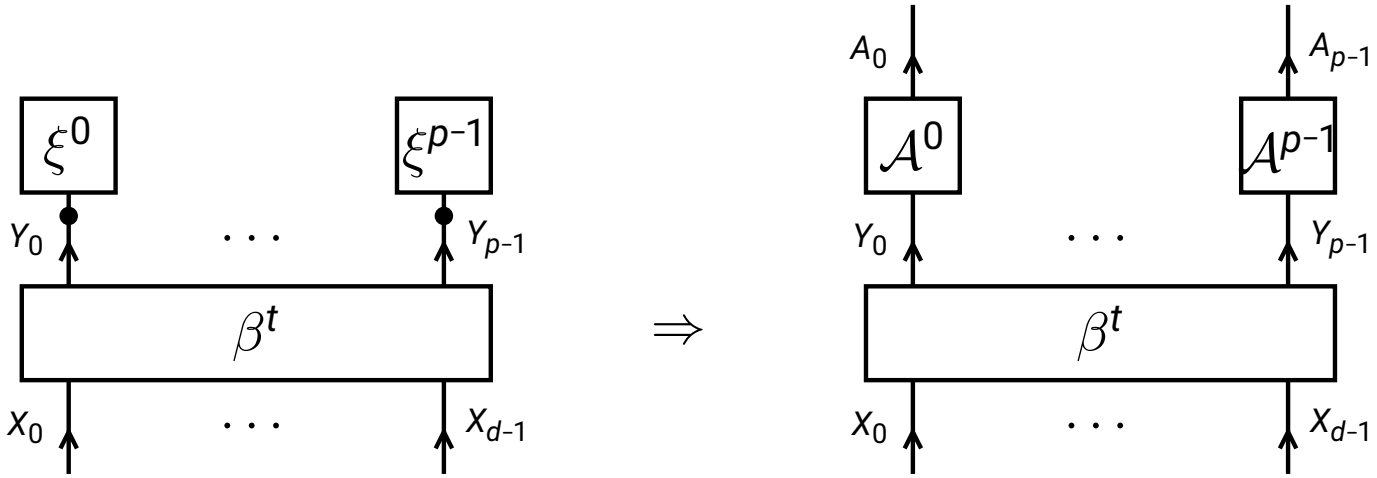


- Prepare q-samples to Bayesian Networks [LYC14], exploiting sparsity principles.
- Apply the Grover operator to amplify the acceptance event $A_{[p]} = 1_{[p]}$.

# Q-sample to the toy accounting system

For the toy accounting system, we prepare a q-sample by the circuit:

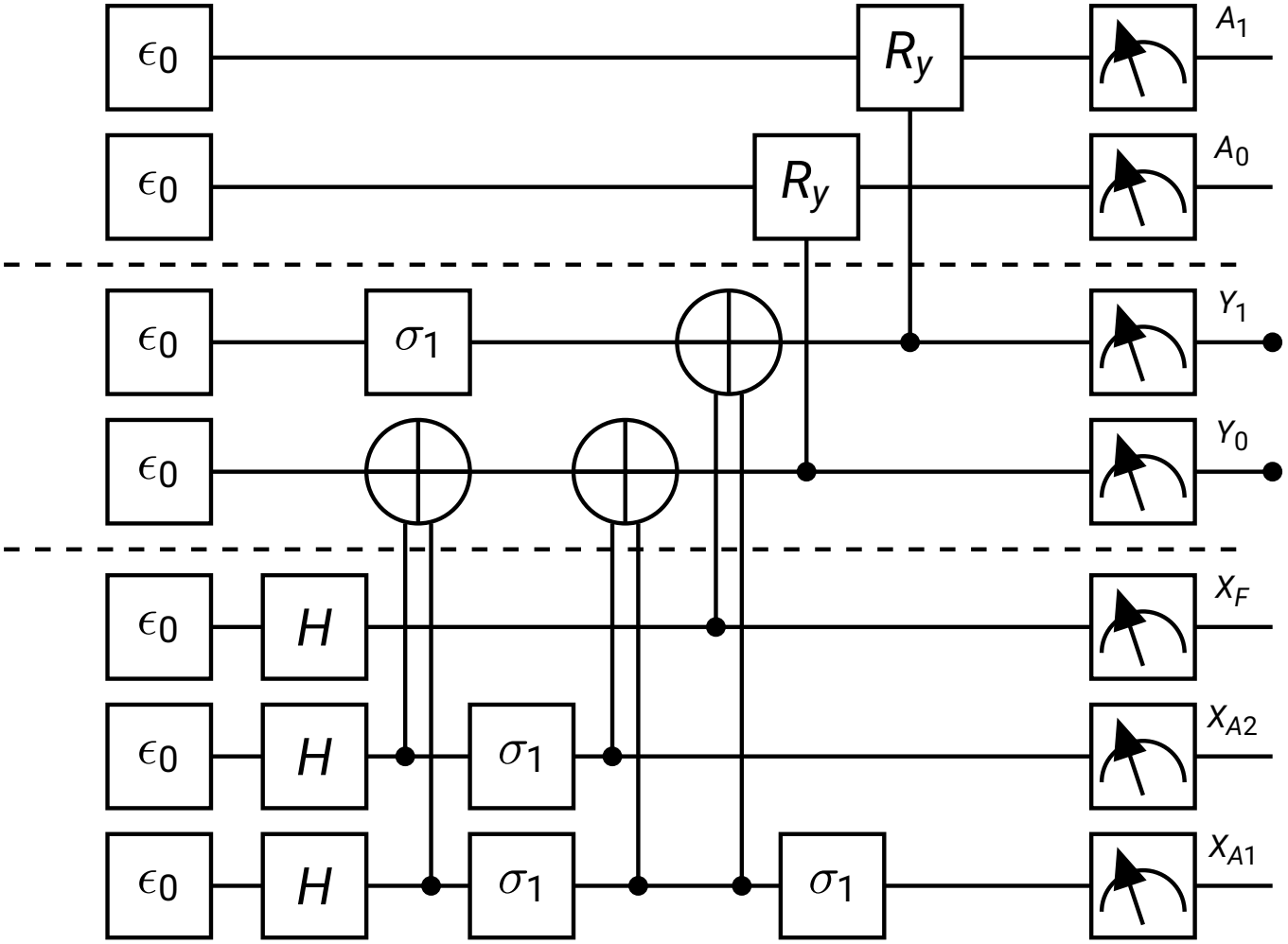

# Summary and Outlook

**Tensor networks**

- Tensors appear naturally as factored system representations
- Sparsity principle: Decomposition into tensor networks
- Inference principle: Tensor network contractions

**Quantum circuits**

- Follow the same formalism and decomposition principles
- Allow for square root speedups for inference tasks

**Implementations** in python packages:

- tnreason[2]: Tensor network based reasoning
- qcreason[3]: Quantum inference for contractions

[2] https://pypi.org/project/tnreason/
[3] https://pypi.org/project/qcreason/

# References

**Thank you very much for your attention!**


[GSFE26] Alex Goessmann, Janina Schütte, Maximilian Fröhlich, and Martin Eigel.
A tensor network formalism for neuro-symbolic AI, January 2026.
arXiv:2601.15442 [cs].

[LYC14] Guang Hao Low, Theodore J. Yoder, and Isaac L. Chuang.
Quantum inference on Bayesian networks.
*Physical Review A*, 89(6):062315, June 2014.

[RN21] Stuart Russell and Peter Norvig.
*Artificial Intelligence: A Modern Approach, Global Edition: A Modern Approach, Global Edition*.
Pearson, Boston, 4 edition, May 2021.