Tensor networks and quantum inference for neuro-symbolic AI

Alex Goessmann
joint work with Janina Schütte, Maximilian Fröhlich and Martin Eigel
arXiv : 2601.15442

Weierstraß Institute for Applied Analysis and Stochastics (WIAS)

TII Seminar
March 12, 2026

Motivation: Toy accounting rule system

Toy accounting rule system

Assume you want to book one of two accounts $\mathrm{A1}$ and $\mathrm{A2}$ depending on a feature F of an invoice, based on two rules:

- Exactly one account must be booked.
- If feature F is present on the invoice, the account $\mathrm{A1}$ is typically booked.

- Accounting rules are formalised in propositional logics, triggered by receipts properties.
- These rules can either be hard restrictions, or prone to exceptions.

We apply tensor networks for neuro-symbolic use cases like this!

Productive accounting rule systems

The variables and main relations of the DATEV accounting ontology[1]:

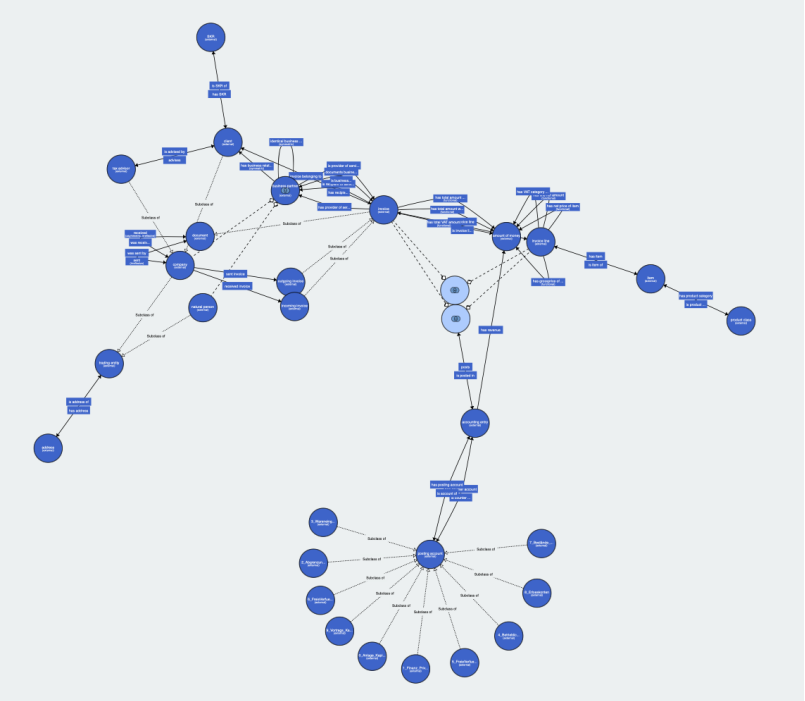

Coarse Visualization

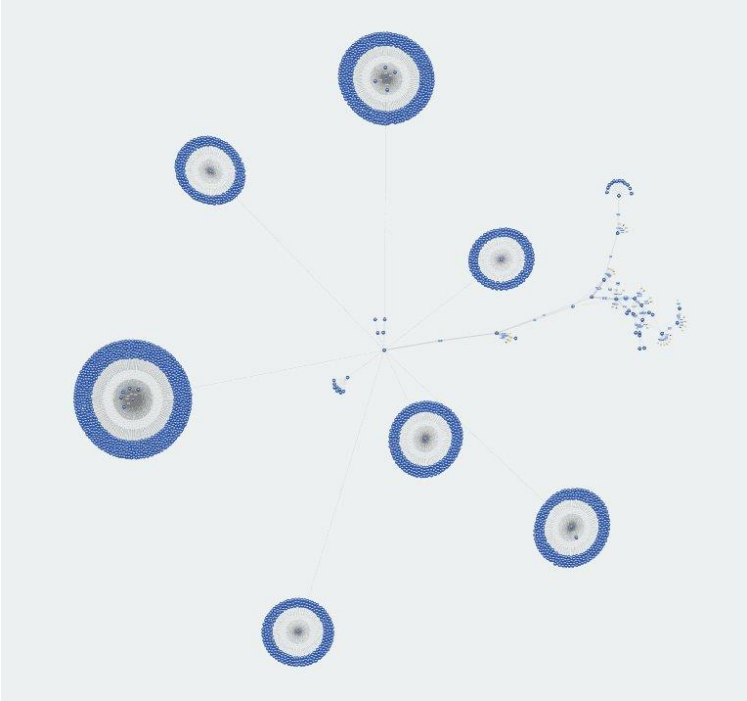

Detailed Visualization

[1] https://github.com/EnexaProject/enexa-use-case-1-business-software-solutions

Tensors: Natural description of factored representations

Factored representations are collection of variables $X_{[d]}$, each with a finite set of states $[m_k] = \{0, \ldots, m_k - 1\}$ [RN21]. The set of states is then the cartesian product

$$\bigtimes_{k \in [d]} [m_k]$$

Knowledge about the system, for example the probability of each state, is a tensor

$$\tau\left[X_{[d]}\right] \; : \; \bigtimes_{k \in [d]} [m_k] \to \mathbb{R}$$

We represent them by diagrams with legs decorated by the variables:

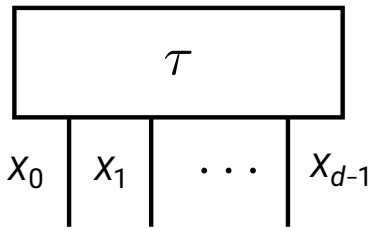

Sparsity by tensor network decompositions

We represent functions between factored state sets by their basis encodings

$$\beta^f\left[Y_{[p]}, X_{[d]}\right] = \sum_{x_{[d]} \in \bigtimes_{k\in[d]}[m_k]} \epsilon_{f(x_{[d]})}\left[Y_{[p]}\right] \otimes \epsilon_{x_{[d]}}\left[X_{[d]}\right]$$

Main sparsity principle

Any decomposition of a function is reflected in a tensor network decomposition of the basis encoding.

Example: The basis encoding of $f\left[X_{[3]}\right] = (X_0 \vee X_1) \wedge \neg X_2$ is decomposed as:

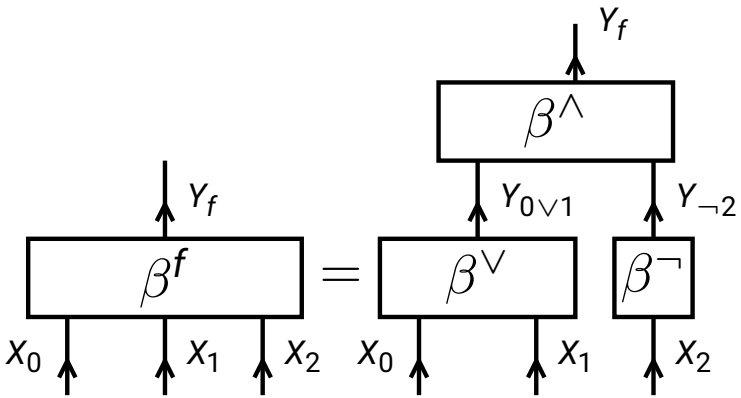

Computation-Activation Networks (CompActNets)

A novel tensor network architecture captures logical and probabilistic models (see [GSFE26]):

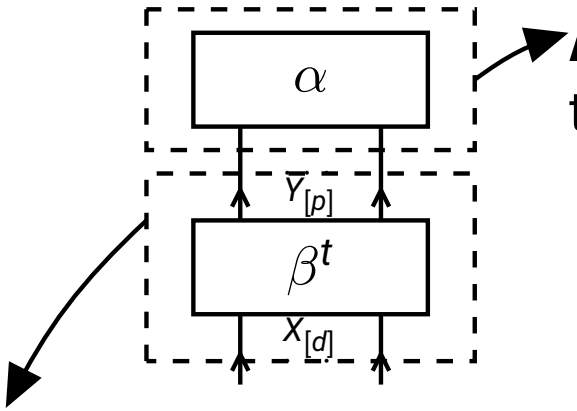

Activation of a statistic by an activation core, for knowledge bases

$$\alpha\left[Y_{[p]}\right] = \bigotimes_{\ell \in [p]} \begin{pmatrix} 0 \\ 1 \end{pmatrix} [Y_\ell]$$

and for exponential families

$$\alpha\left[Y_{[p]}\right] = \bigotimes_{\ell \in [p]} \begin{pmatrix} 1 \\ \exp\left[\theta\left[L = \ell\right]\right] \end{pmatrix} [Y_\ell]$$

Computation of a statistic

$$t : \bigtimes_{k \in [d]} [m_k] \to \bigtimes_{\ell \in [p]} [p_\ell]$$

by basis encoding

Toy accounting system as a CompActNet

We represent the toy accounting system as a Computation-Activation Network:

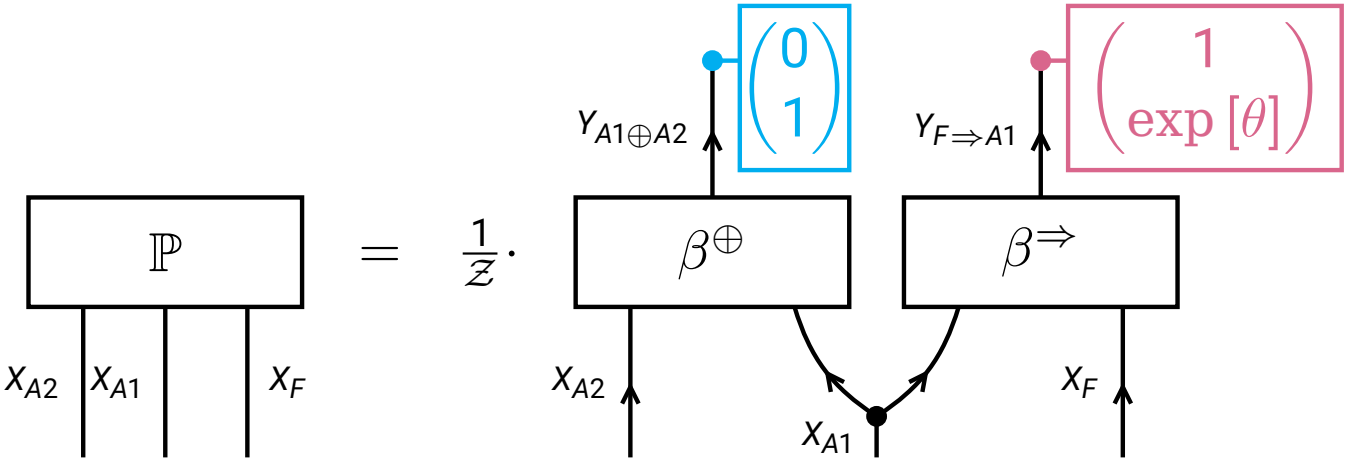

- The hard activation vector $\begin{pmatrix}0\\1\end{pmatrix}$ $[Y_{A1\oplus A2}]$ ensures that the first rule is always true.
- The soft activation vector $\begin{pmatrix}1\\ \exp[\theta]\end{pmatrix}$ $[Y_{F\oplus A1}]$ introduces the trainable parameter $\theta \in \mathbb{R}$ controlling the satisfaction probability of the second rule.

Inference by Contractions

Main inference principle

Model inference amounts to tensor network contractions.

- Probabilistic inference: Contractions are marginal probabilities.
- Logical inference: Contractions are model counts, which decide entailment.

Example: Distribution of X_{A1} and X_{A2} conditioned on $X_F = 0$ is parallel to

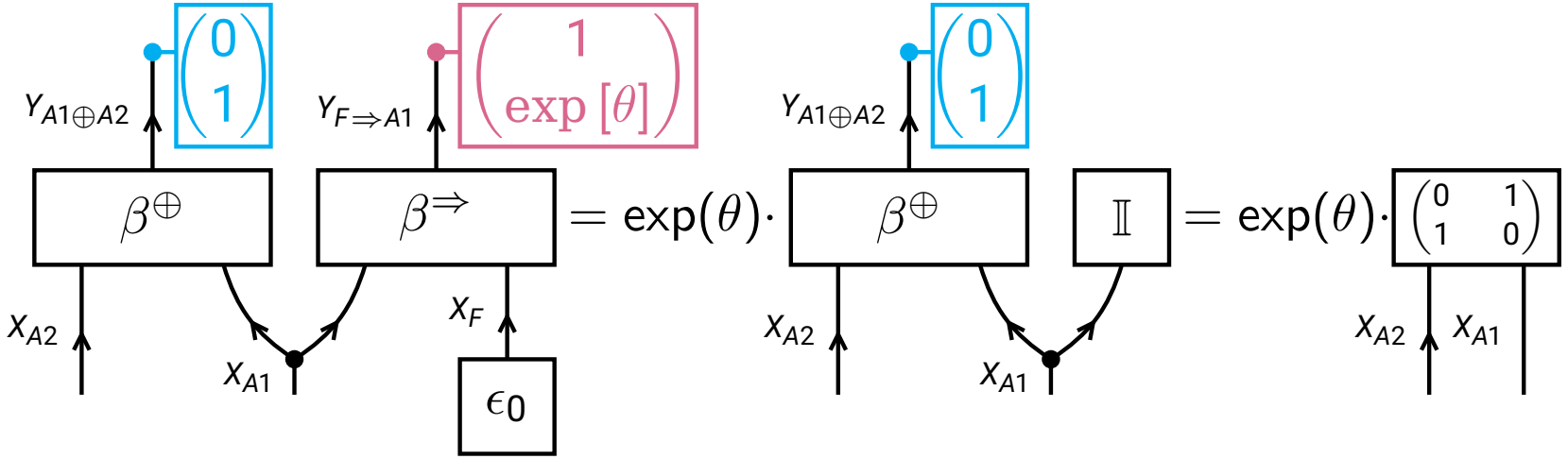

Tensor networks for neuro-symbolic AI

Tensor networks provide a unifying language to capture the different paradigms of AI [GSFE26]:

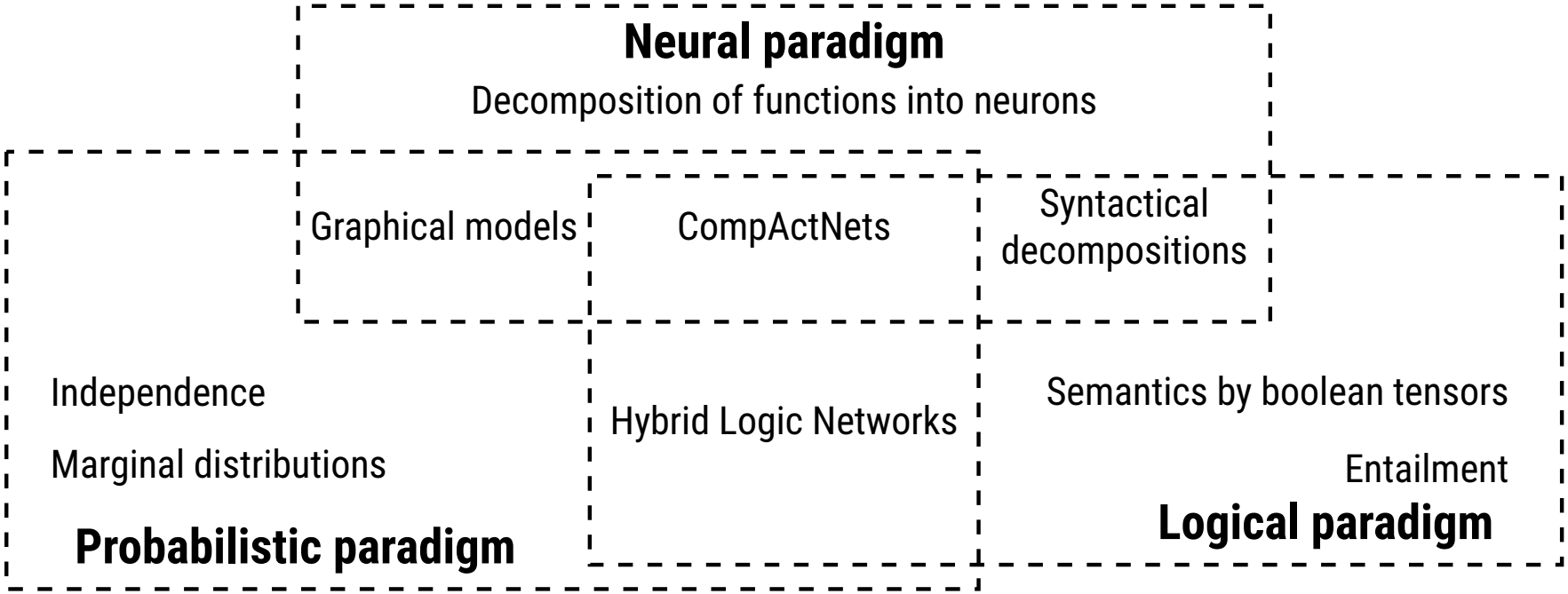

Motivation for quantum inference

Efficiency problem

Tensor network contractions are the workhorse of inference, but they are often computationally demanding.

The similarity of quantum circuits and tensor networks allows to apply quantum algorithms for inference.

Advantage: Square root speedups through quantum inference (provided that sparsity principles apply).

Quantum rejection sampling [LYC14]

Amplify conditioned event by the Grover algorithm to improve the sample acceptance probability.

Q-samples of Bayesian networks

Q-samples of Bayesian Networks can be prepared by controlled unitaries[LYC14]:

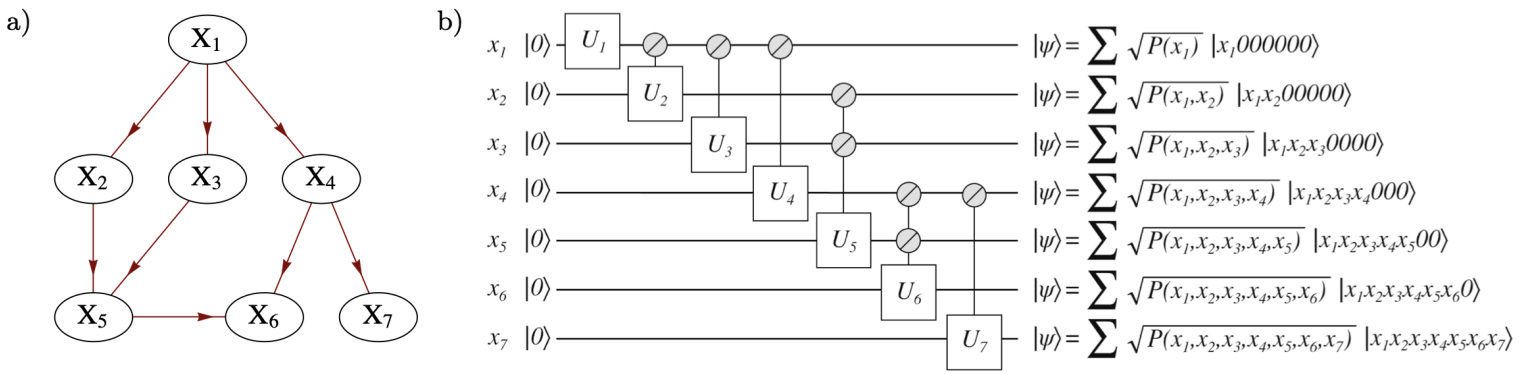

Extension:

- **Sparse representation:** How to find sparse decompositions of the controlled unitaries?
- **Ancilla augmentation:** How to represent generic tensor networks as Bayesian networks?

Q-samples of Computation-Activation Networks

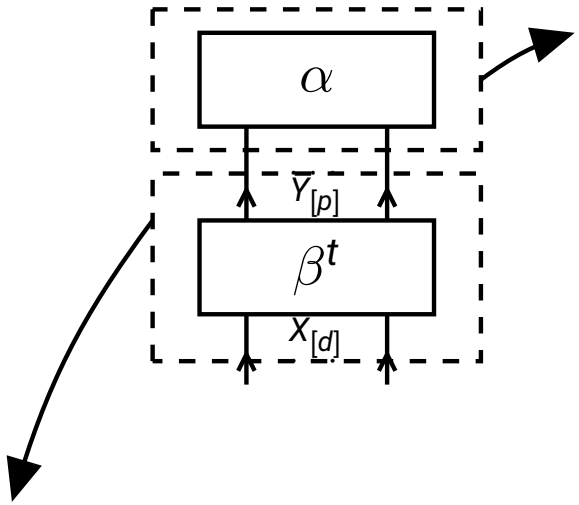

Undirected Activation Network:
No representation by uniformly controlled unitaries

Challenge: Representation

- Ancilla augmentation (here)
- Amplitude amplification

Directed Computation Network:
Representation by uniformly controlled unitaries [LYC14]

Challenge: Sparsity

From tensor networks to quantum circuits

The oracle to a boolean functions f is the controlled unitary with slices to $x_{[d]} \in [2]^d$

$$\mathcal{C}^f \left[Y_f^{\text{in}} = 0, Y_f^{\text{out}}, X_{[d]} = x_{[d]} \right] = \epsilon_{f(x_{[d]})} \left[Y_f^{\text{out}} \right] .$$

Connection: Oracles relate with basis encodings of functions as:

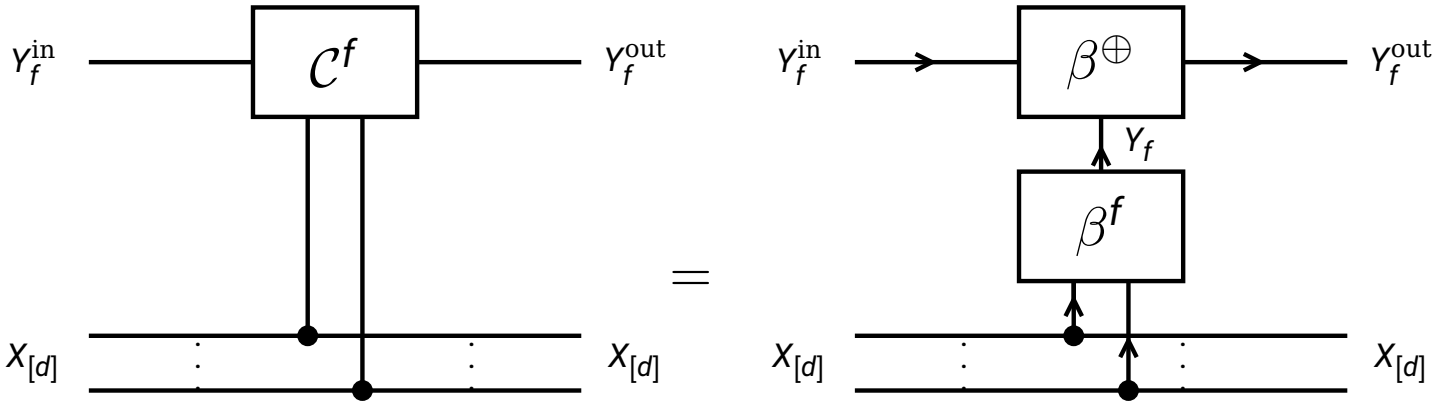

The same sparsity principles can thus be applied to get efficient quantum circuits for the oracles.

Decomposition Sparsity

The oracle to a composition of formulas is decomposed into oracles to the sub-formulas:

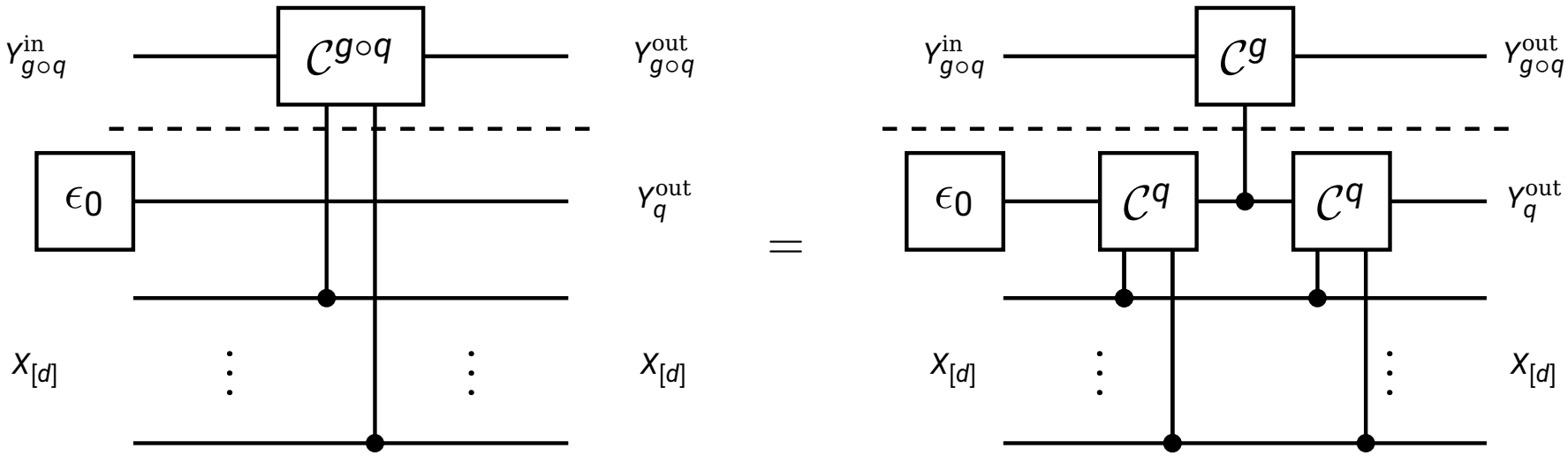

This is analogous to the classical basis encoding decomposition!

Ancilla augmentation

Strategy

Represent generic tensor networks as conditioned Bayesian networks, to exploit the q-sample preparation method of [LYC14].

Given $\mathbb{P}\left[X_{[d]}\right]$, find Bayesian Network $\tilde{\mathbb{P}}[X_{[d]}, A_{[p]}]$ satisfying

$$\lambda \cdot \mathbb{P}\left[X_{[d]}\right] = \tilde{\mathbb{P}}[X_{[d]}, A_{[p]} = 1_{[p]}]$$

for some acceptance probability $\lambda \in (0, 1]$.

Rejection sampling approach

Draw samples $(x_{[d]}, a_{[p]})$ from $\tilde{\mathbb{P}}[X_{[d]}, A_{[p]}]$ and accept the sample if $a_{[p]} = 1_{[p]}$.

Ancilla augmentation of CompActNets

For an CompActNet with elementary activation, the ancilla augmentation is:

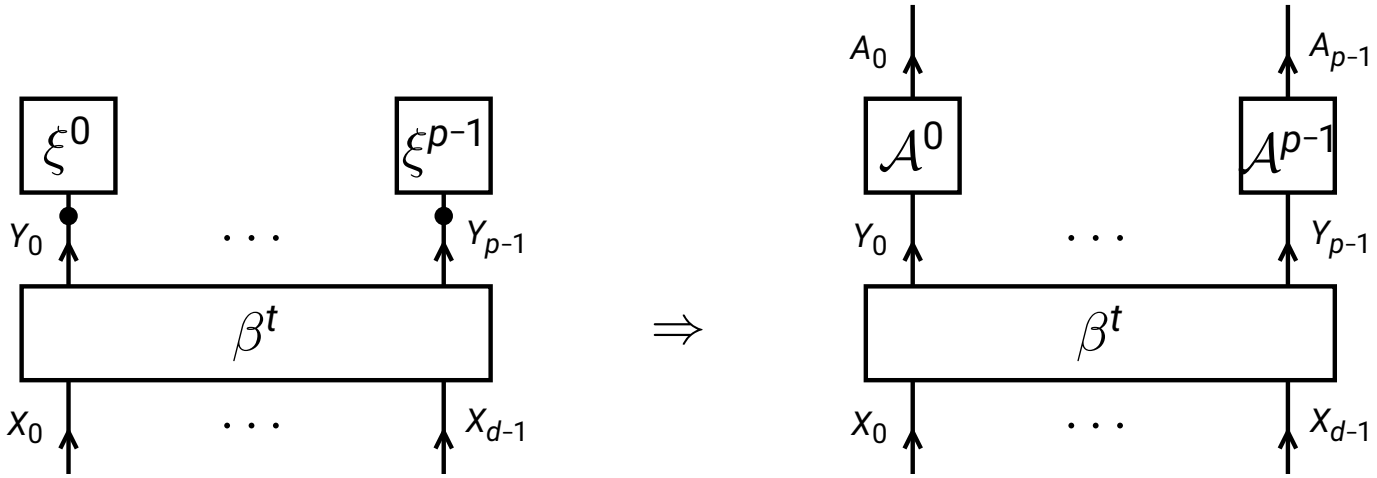

Q-sample to the toy accounting system

For the toy accounting system, we prepare a q-sample by the circuit:

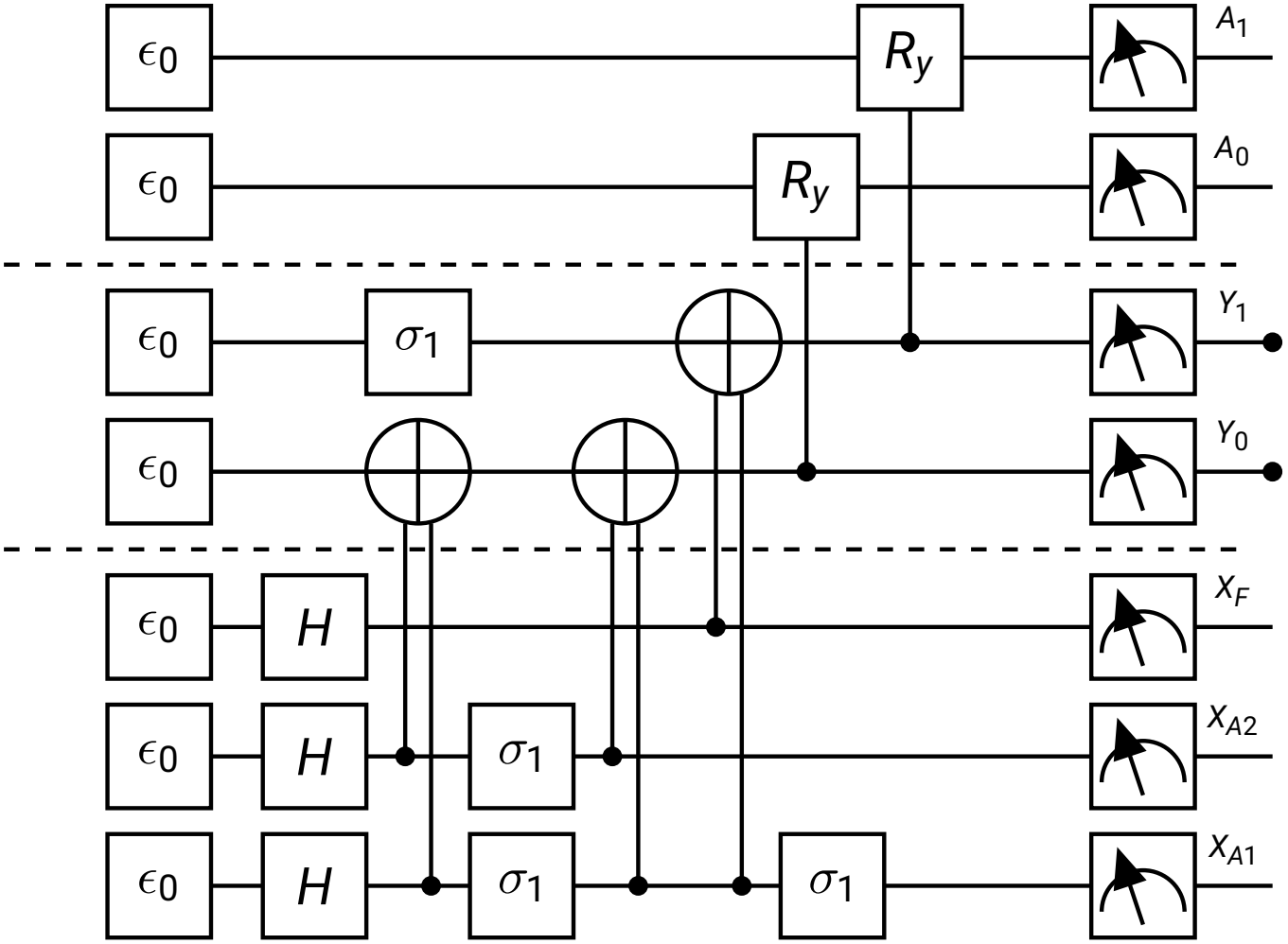

Amplitude amplification

Problem of low acceptance probabilities

The acceptance probability λ is often small, rendering rejection sampling approaches inefficient.

Improvement by Quantum inference: **Amplitude Amplification** on the acceptance event $A_{[p]} = 1_{[p]}$.

Approach for CompActNets:

- Turn CompActNets into (conditioned) Bayesian Network $\tilde{\mathbb{P}}[X_{[d]}, A_{[p]}]$ satisfying $\lambda \cdot \mathbb{P}\left[X_{[d]}\right] = \tilde{\mathbb{P}}[X_{[d]}, A_{[p]} = 1_{[p]}]$ for a sample acceptance rate $\lambda \in (0, 1]$.
- Prepare q-samples to Bayesian Networks [LYC14], exploiting sparsity principles.
- Apply the Grover operator to amplify the acceptance event $A_{[p]} = 1_{[p]}$.

Summary and Outlook

Tensor networks

- Tensors appear naturally as factored system representations
- Sparsity principle: Decomposition into tensor networks
- Inference principle: Tensor network contractions

Quantum circuits

- Follow the same formalism and decomposition principles
- Allow for square root speedups for inference tasks

Implementations in python packages:

- tnreason[2]: Tensor network based reasoning
- qcreason[3]: Quantum inference for contractions

[2] https://pypi.org/project/tnreason/
[3] https://pypi.org/project/qcreason/

References

Thank you very much for your attention!

[GSFE26] Alex Goessmann, Janina Schütte, Maximilian Fröhlich, and Martin Eigel.
A tensor network formalism for neuro-symbolic AI, January 2026.
arXiv:2601.15442 [cs].

[LYC14] Guang Hao Low, Theodore J. Yoder, and Isaac L. Chuang.
Quantum inference on Bayesian networks.
Physical Review A, 89(6):062315, June 2014.

[RN21] Stuart Russell and Peter Norvig.
Artificial Intelligence: A Modern Approach, Global Edition: A Modern Approach, Global Edition.
Pearson, Boston, 4 edition, May 2021.