Tensor networks and quantum inference for neuro-symbolic AI

Alex Goessmann
joint work with Janina Schütte, Maximilian Fröhlich and Martin Eigel
arXiv : 2601.15442

Weierstraß Institute for Applied Analysis and Stochastics (WIAS)

SIAM PP26 Conference - MS79
March 6, 2026

Outline

- Tensor networks for neuro-symbolic AI
- Quantum inference for neuro-symbolic AI

Outline

- Tensor networks for neuro-symbolic AI
- Quantum inference for neuro-symbolic AI

Motivation: Toy accounting rule system

Example (Toy accounting rule system)

Assume you want to book one of two accounts $\mathrm{A1}$ and $\mathrm{A2}$ depending on a feature F of an invoice, based on two rules:

- Exactly one account must be booked.
- If feature F is present on the invoice, the account $\mathrm{A1}$ is typically booked.

- Accounting rules are formalised in propositional logics, triggered by receipts properties.
- These rules can either be hard restrictions, or prone to exceptions.

We apply tensor networks for neuro-symbolic use cases like this!

Productive accounting rule systems

The variables and main relations of the DATEV accounting ontology[1]:

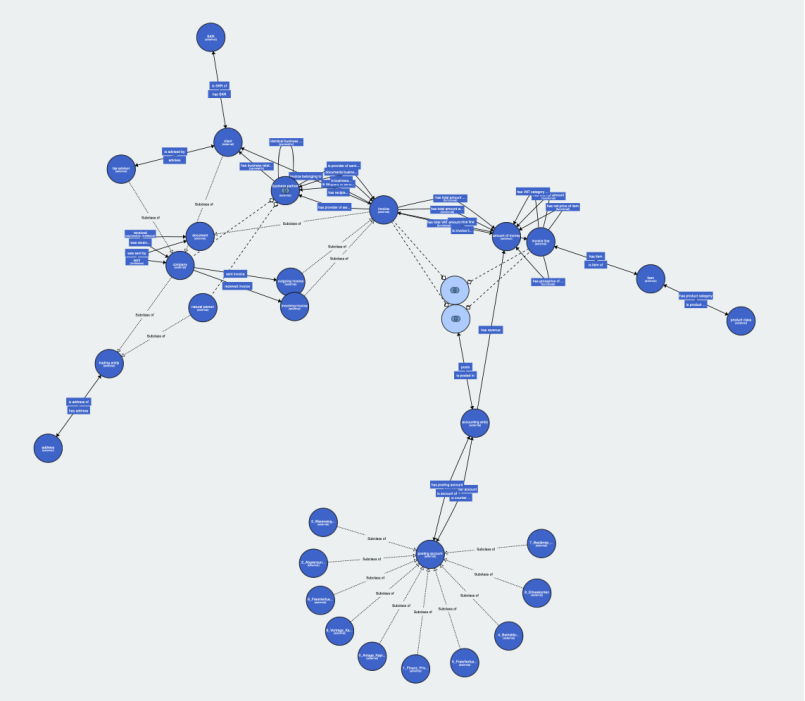

Coarse Visualization

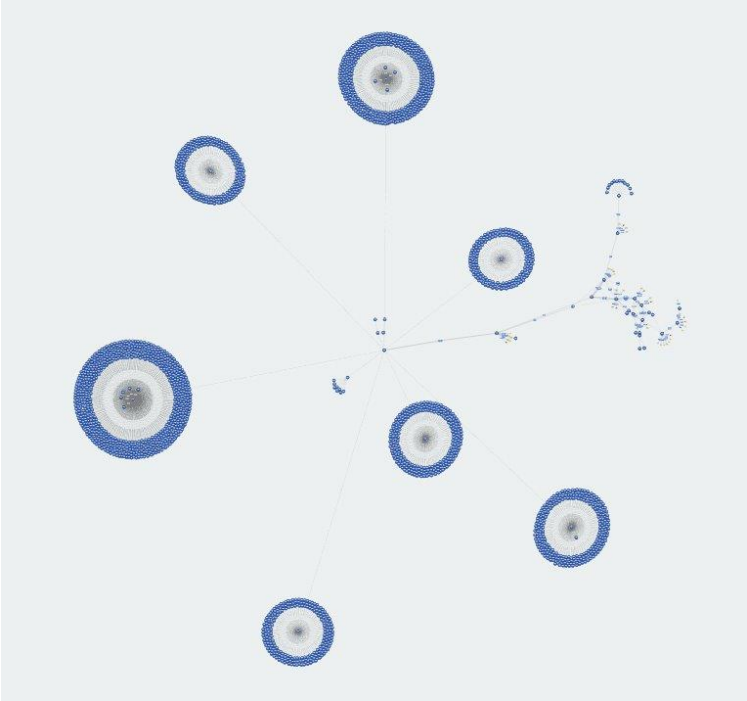

Detailed Visualization

[1] https://github.com/EnexaProject/enexa-use-case-1-business-software-solutions

Tensors: Natural description of factored representations

Factored representations are collection of variables $X_{[d]}$, each with a finite set of states $[m_k] = \{0, \ldots, m_k - 1\}$ [RN21]. The set of states is then the cartesian product

$$\bigtimes_{k \in [d]} [m_k]$$

Knowledge about the system, for example the probability of each state, is a tensor

$$\tau\left[X_{[d]}\right] \; : \; \bigtimes_{k \in [d]} [m_k] \to \mathbb{R}$$

We represent them by diagrams with legs decorated by the variables:

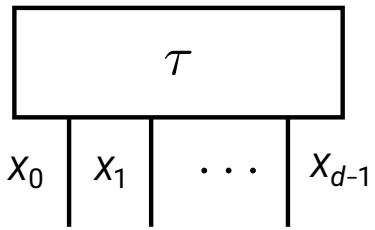

Sparsity by tensor network decompositions

We represent functions between factored state sets by their basis encodings

$$\beta^f\left[Y_{[p]}, X_{[d]}\right] = \sum_{x_{[d]} \in \bigtimes_{k\in[d]}[m_k]} \epsilon_{f(x_{[d]})}\left[Y_{[p]}\right] \otimes \epsilon_{x_{[d]}}\left[X_{[d]}\right]$$

Main sparsity principle

Any decomposition of a function is reflected in a tensor network decomposition of the basis encoding.

Example: The basis encoding of $f\left[X_{[3]}\right] = (X_0 \vee X_1) \wedge \neg X_2$ is decomposed as:

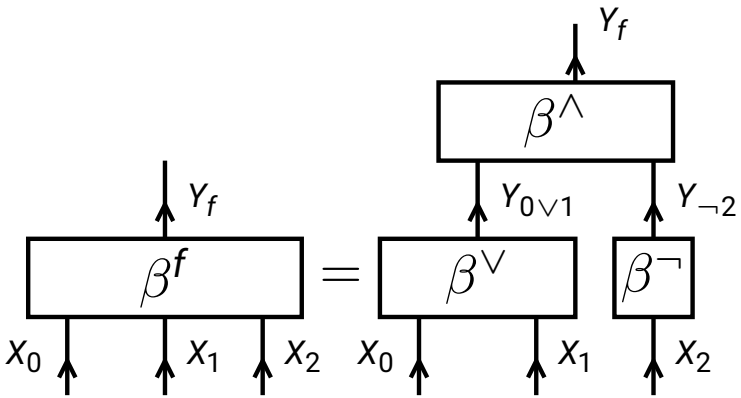

Computation-Activation Networks (CompActNets)

A novel tensor network architecture captures logical and probabilistic models (see [GSFE26]):

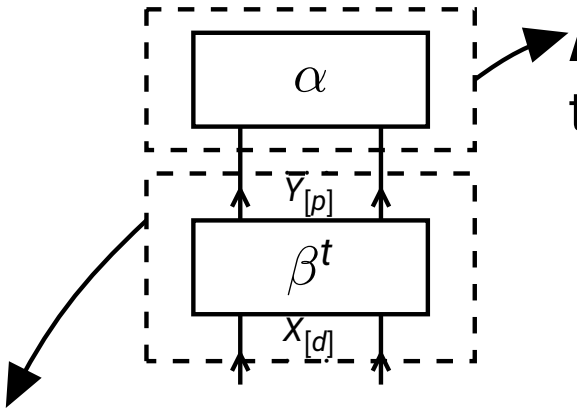

Activation of a statistic by an activation core, for knowledge bases

$$\alpha\left[Y_{[p]}\right] = \bigotimes_{\ell \in [p]} \begin{pmatrix} 0 \\ 1 \end{pmatrix} [Y_\ell]$$

and for exponential families

$$\alpha\left[Y_{[p]}\right] = \bigotimes_{\ell \in [p]} \begin{pmatrix} 1 \\ \exp\left[\theta\left[L = \ell\right]\right] \end{pmatrix} [Y_\ell]$$

Computation of a statistic

$$t : \bigtimes_{k \in [d]} [m_k] \to \bigtimes_{\ell \in [p]} [p_\ell]$$

by basis encoding

Toy accounting system as a CompActNet

We represent the toy accounting system as a Computation-Activation Network:

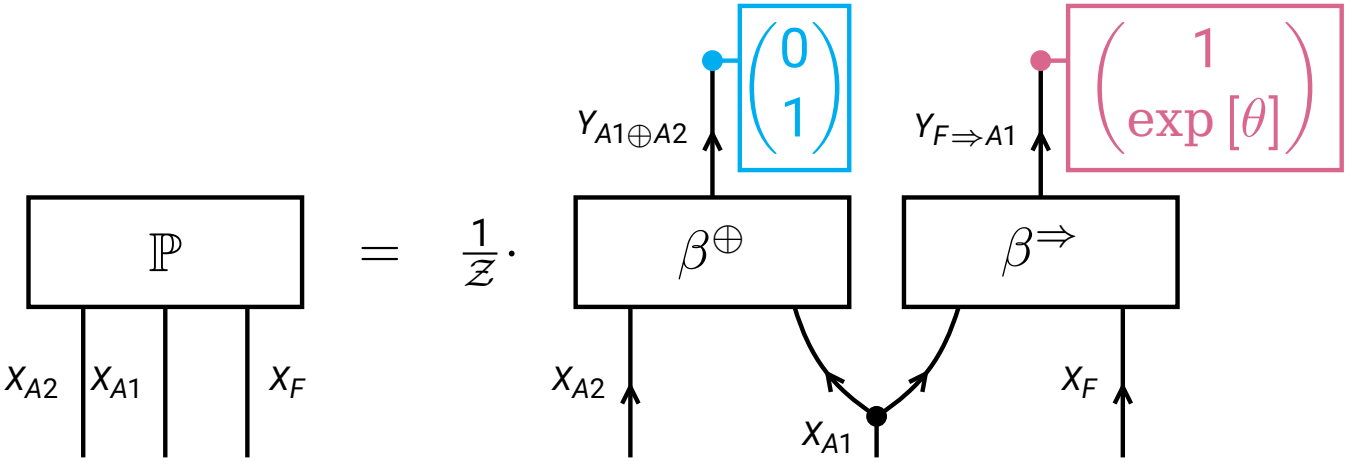

- The hard activation vector $\begin{pmatrix} 0 \\ 1 \end{pmatrix}$ $[Y_{A1 \oplus A2}]$ ensures that the first rule is always true.
- The soft activation vector $\begin{pmatrix} 1 \\ \exp[\theta] \end{pmatrix}$ $[Y_{F \oplus A1}]$ introduces the trainable parameter $\theta \in \mathbb{R}$ controlling the satisfaction probability of the second rule.

Inference by Contractions

Main inference principle

Model inference amounts to tensor network contractions.

- Probabilistic inference: Contractions are marginal probabilities.
- Logical inference: Contractions are model counts, which decide entailment.

Example: Distribution of X_{A1} and X_{A2} conditioned on $X_F = 0$ is parallel to

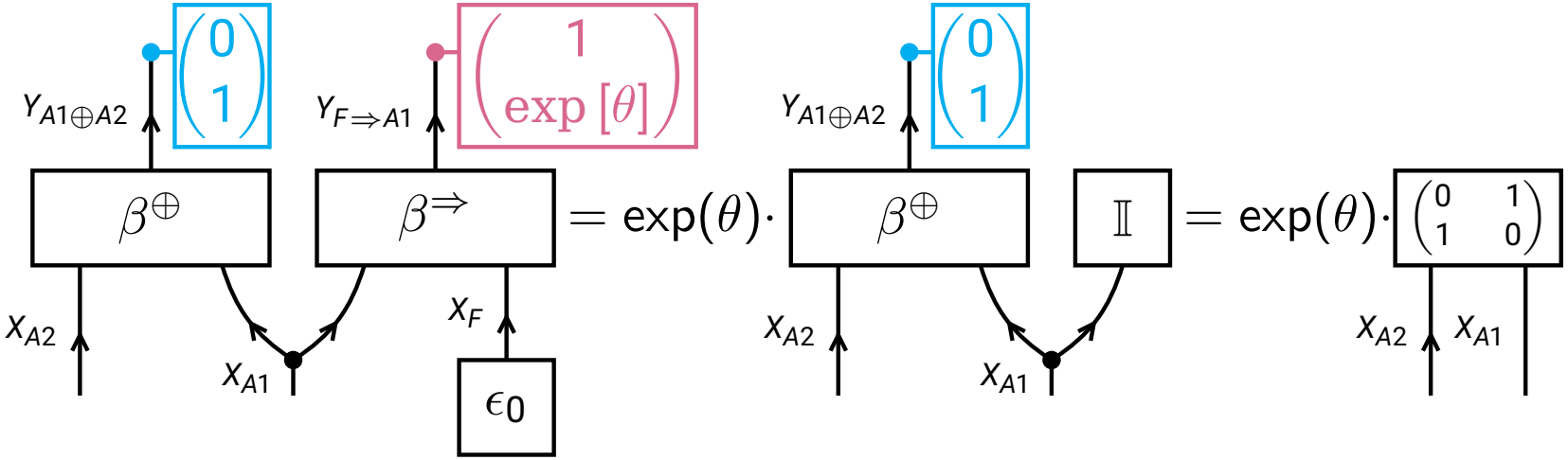

Tensor networks for neuro-symbolic AI

Tensor networks provide a unifying language to capture the different paradigms of AI [GSFE26]:

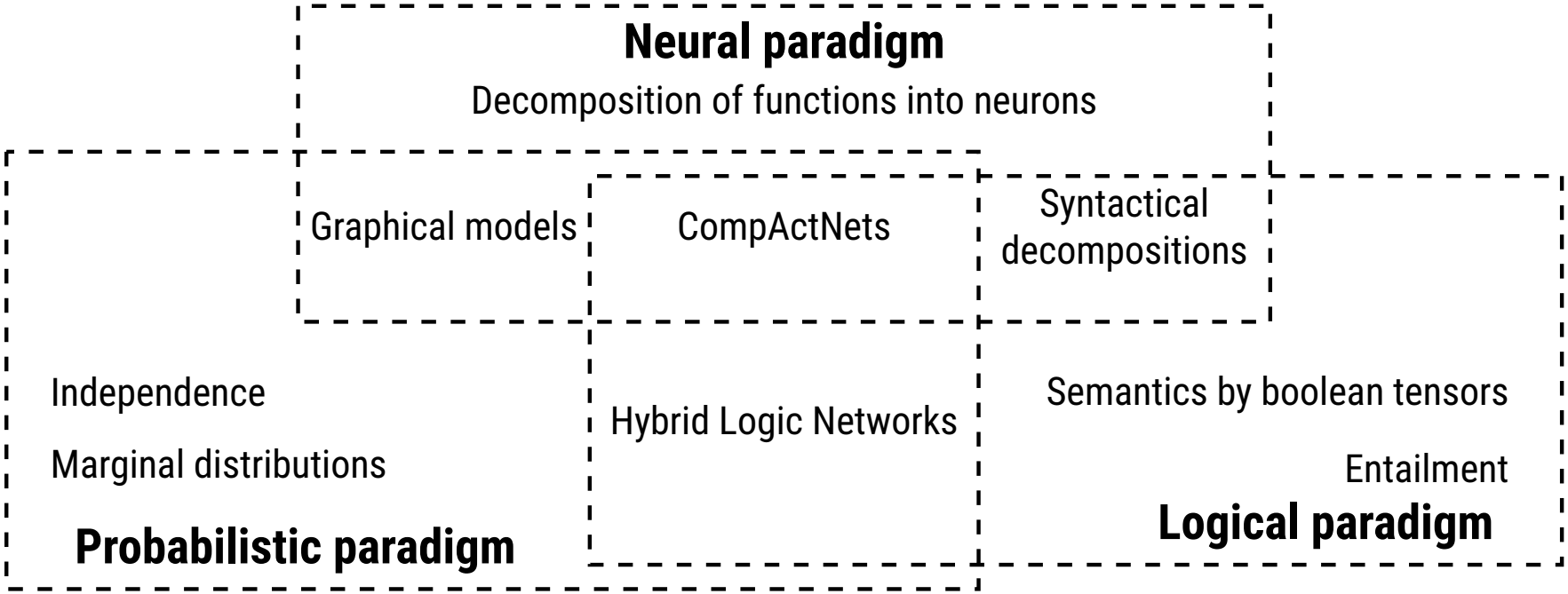

Outline

- Tensor networks for neuro-symbolic AI
- Quantum inference for neuro-symbolic AI

Motivation for quantum inference

Efficiency problem

Tensor network contractions are the workhorse of inference, but they are often computationally demanding.

Mitigate computational cost of contractions:

Get square root speedups through quantum inference.

The similarity of quantum circuits and tensor networks allows to apply quantum algorithms for inference tasks.

Quantum Rejection Sampling [LYC14]

Square root advantage over classical rejection sampling schemes.

From tensor networks to quantum circuits

The oracle to a boolean functions f is the controlled unitary with slices to $x_{[d]} \in [2]^d$

$$\mathcal{C}^f \left[Y_f^{\text{in}} = 0, Y_f^{\text{out}}, X_{[d]} = x_{[d]} \right] = \epsilon_{f(x_{[d]})} \left[Y_f^{\text{out}} \right] .$$

Connection: Oracles relate with basis encodings of functions as:

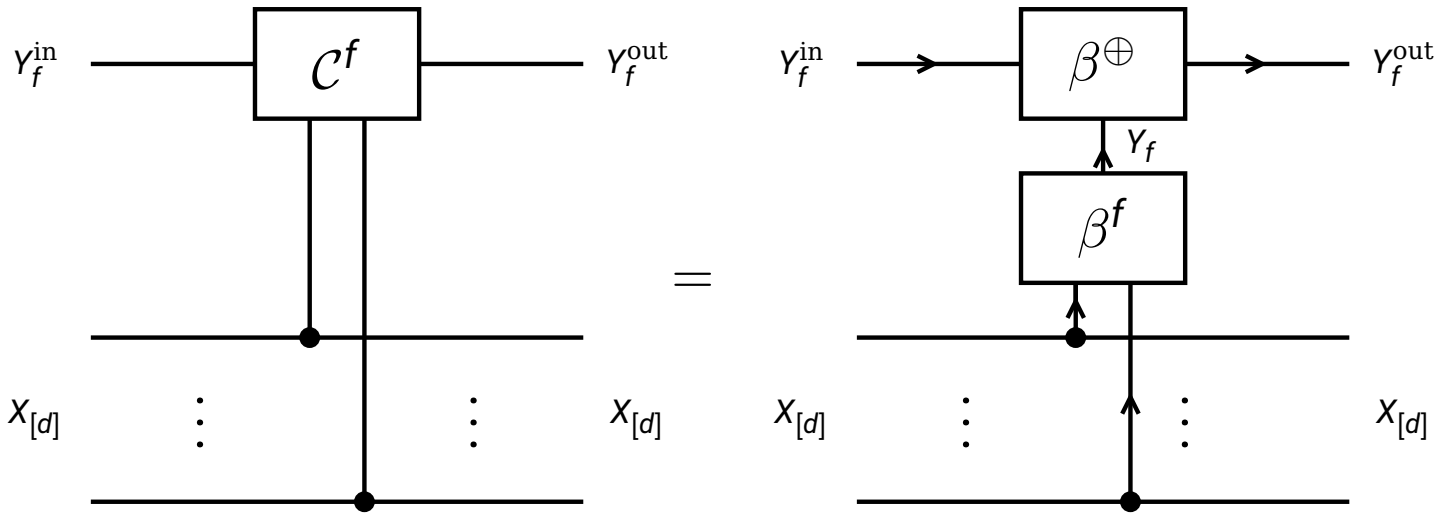

The same sparsity principles can thus be applied to get efficient quantum circuits for the oracles.

Amplitude amplification

Approach:

- Turn CompActNets into (conditioned) Bayesian Network $\tilde{\mathbb{P}}[X_{[d]}, A_{[p]}]$ satisfying $\lambda \cdot \mathbb{P}\left[X_{[d]}\right] = \tilde{\mathbb{P}}[X_{[d]}, A_{[p]} = 1_{[p]}]$ for a sample acceptance rate $\lambda \in (0, 1]$. For an CompActNet with elementary activation, this is

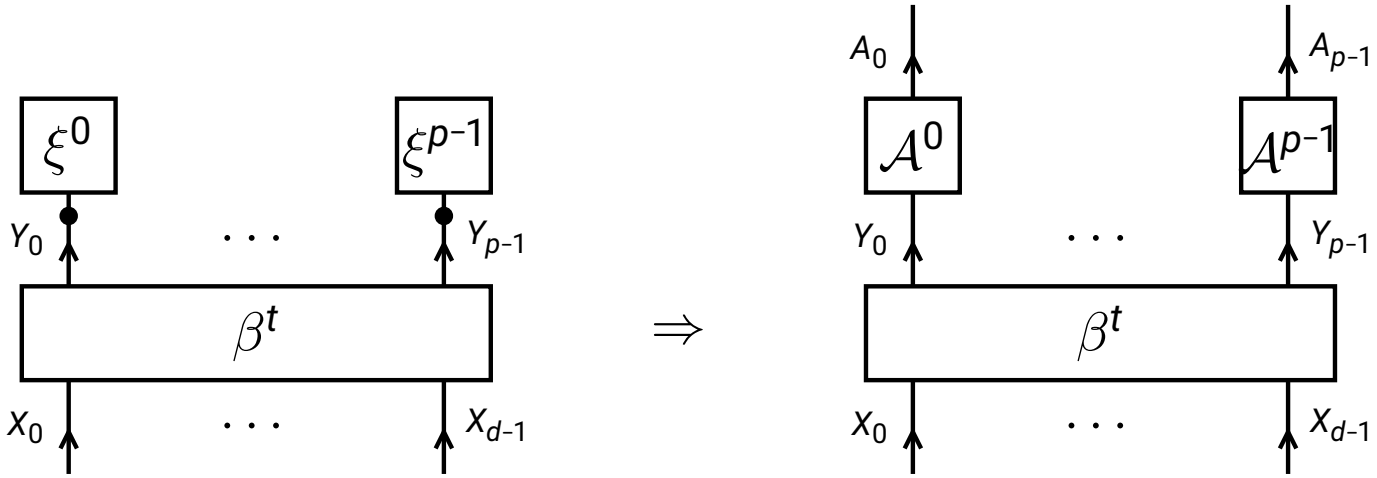

- Prepare q-samples to Bayesian Networks [LYC14], exploiting sparsity principles.
- Apply the Grover operator to amplify the acceptance event $A_{[p]} = 1_{[p]}$.

Q-sample to the toy accounting system

For the toy accounting system, we prepare a q-sample by the circuit:

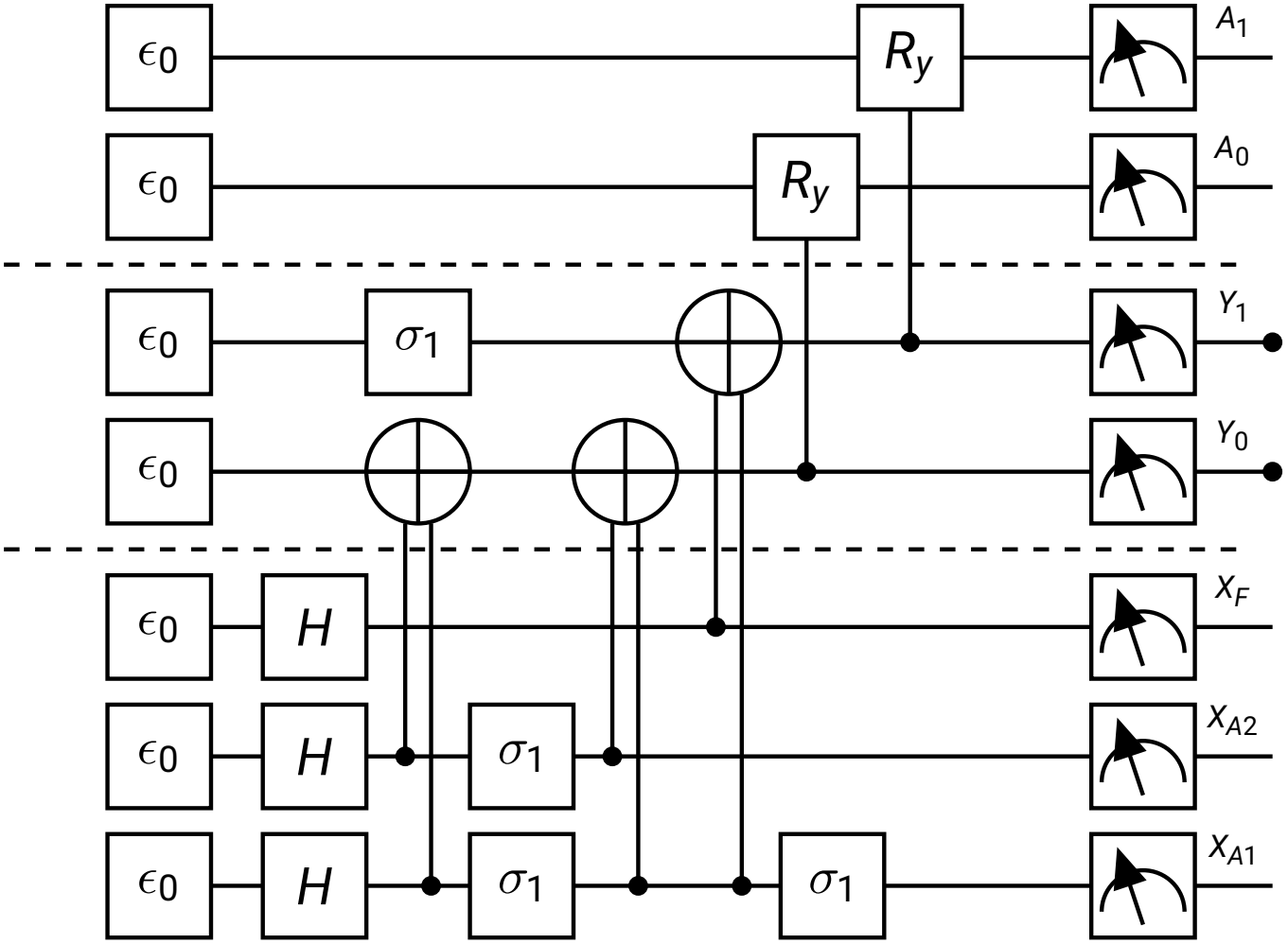

Summary and Outlook

Tensor networks

- Tensors appear naturally as factored system representations
- Sparsity principle: Decomposition into tensor networks
- Inference principle: Tensor network contractions

Quantum circuits

- Follow the same formalism and decomposition principles
- Allow for square root speedups for inference tasks

Implementations in python packages:

- tnreason[2]: Tensor network based reasoning
- qcreason[3]: Quantum inference for contractions

[2] https://pypi.org/project/tnreason/
[3] https://pypi.org/project/qcreason/

References

[GSFE26] Alex Goessmann, Janina Schütte, Maximilian Fröhlich, and Martin Eigel.
A tensor network formalism for neuro-symbolic AI, January 2026.
arXiv:2601.15442 [cs].

[LYC14] Guang Hao Low, Theodore J. Yoder, and Isaac L. Chuang.
Quantum inference on Bayesian networks.
Physical Review A, 89(6):062315, June 2014.

[RN21] Stuart Russell and Peter Norvig.
Artificial Intelligence: A Modern Approach, Global Edition: A Modern Approach, Global Edition.
Pearson, Boston, 4 edition, May 2021.