Tensor networks and quantum inference for neuro-symbolic AI

Alex Goessmann
joint work with Janina Schütte, Maximilian Fröhlich and Martin Eigel

Weierstraß Institute for Applied Analysis and Stochastics (WIAS)

SIAM PP Conference 2026 - MS79
March 6, 2026

Outline

- Tensor networks in neuro-symbolic AI
- Quantum Inference for Neuro-Symbolic AI

Outline

- Tensor networks in neuro-symbolic AI
- Quantum Inference for Neuro-Symbolic AI

Motivation: Accounting Rule Systems

Example (Toy Accounting Rule System)

Assume you want to book one of two accounts $\mathrm{A1}$ and $\mathrm{A2}$ depending on a feature F of an invoice, based on two rules:

- Exactly one account must be booked.
- If feature F is present on the invoice, the account $\mathrm{A1}$ is typically booked.

- Accounting rules are formalised in **propositional logics**, triggered by receipts properties.
- These rules can either be hard restrictions, or prone to exceptions.

Tensors: A natural description of factored systems

Factored System [Russel and Norvig, 2021]: Collection of variables, each with a finite set of states.
Knowledge about the system: Store an information (e.g. Boolean) to each system state, and get Tensors

Model Sparsity by Tensor Network Decompositions

Basis encodings of functions between factored systems are tensors

$$\beta^q\left[Y_{[p]}, X_{[d]}\right] = \sum_{x_{[d]} \in \bigtimes_{k \in [d]} [m_k]} \epsilon_{q(x_{[d]})}\left[Y_{[p]}\right] \otimes \epsilon_{x_{[d]}}\left[X_{[d]}\right]$$

Main Sparsity Principle

Any decomposition of the function is reflected in a tensor network decomposition.

For the formula $f\left[X_{[3]}\right] = (X_0 \vee X_1) \wedge \neg X_2$, we have the following syntactical decomposition of its basis encoding:

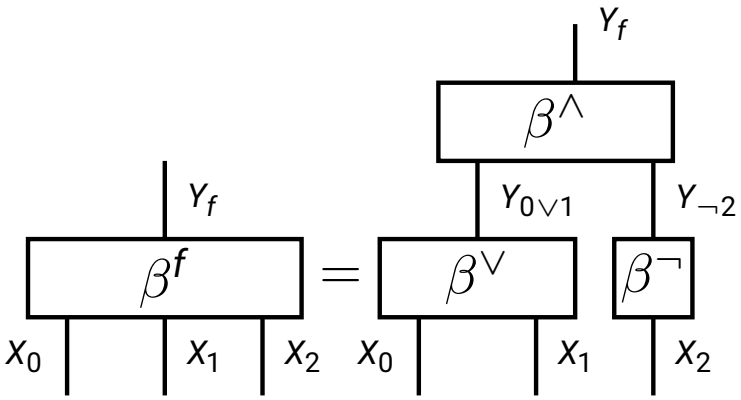

Inference by Contractions

Main Reasoning Principle

Model counts and marginal probabilities are contractions of tensor networks representing a model.

More advanced inference schemes:

- Parameter estimation: Moments in an inner loops, which are iteratively matched.
- Expectation propagation: Approximation framework for contractions by orchestration of efficient inference steps.

Toy Accounting Problem in a Tensor Network Representation

We represent the toy accounting model as a Computation-Activation Network with a trainable parameter $\theta \in \mathbb{R}$ enforcing the probabilistic second rule:

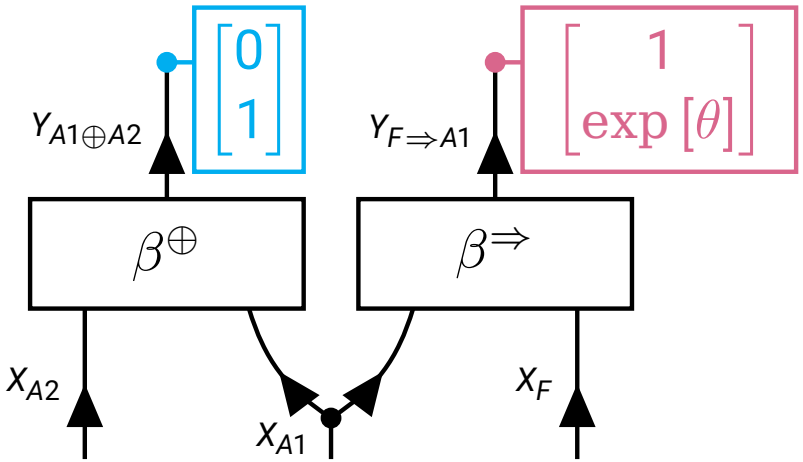

The contracted Computation-Activation Network is a tensor of order 3 in $\mathbb{R}^{2x2x2}$, with legs decorated by the variables X_{A1}, X_{A2}, X_F. Its coordinates are:

Tensor Networks for Neuro-Symbolic AI

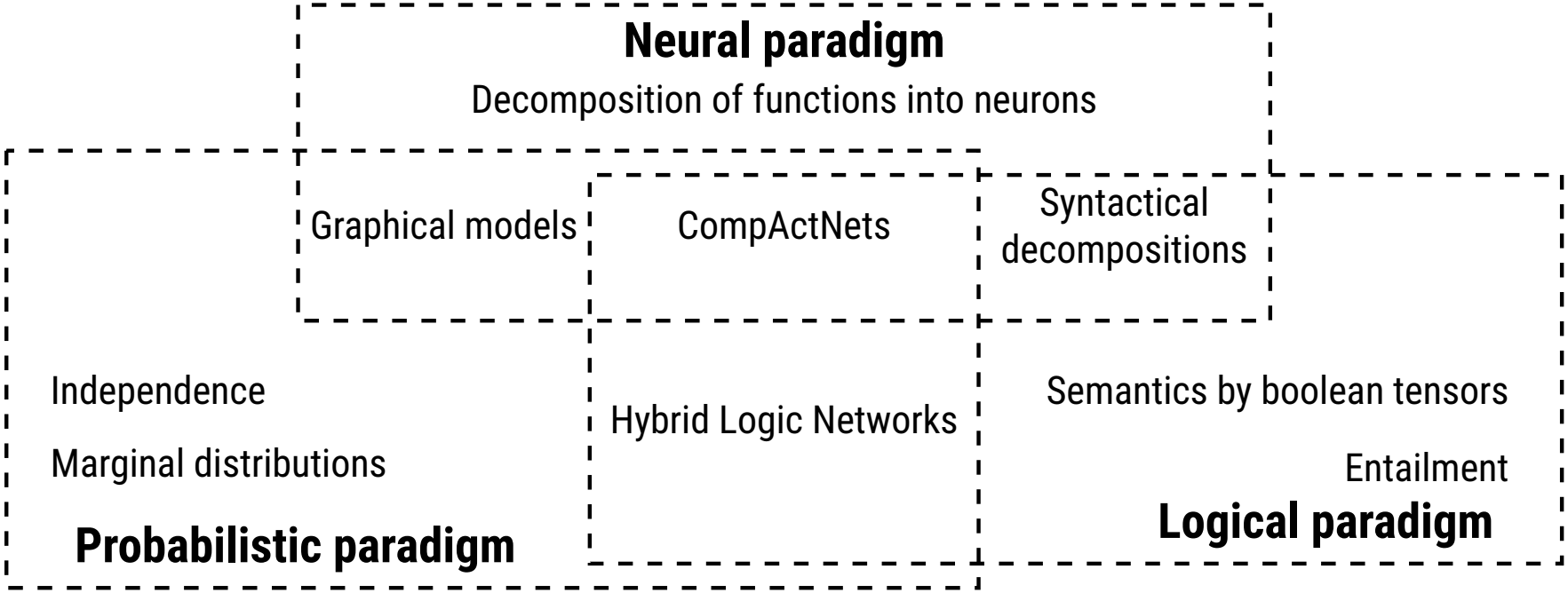

Outline

- Tensor networks in neuro-symbolic AI
- Quantum Inference for Neuro-Symbolic AI

Motivation

Mitigate computational cost of contractions:

Get square root speedups through Quantum Inference.

Quantum Rejection Sampling

Square root advantage over classical rejection sampling schemes.

Quantum Phase Estimation

Relate the contractions with the phases of Grover eigenvalues.

Tensor Networks to Quantum Circuits

Oracles $\mathcal{C}^f$ relate with basis encodings of functions as:

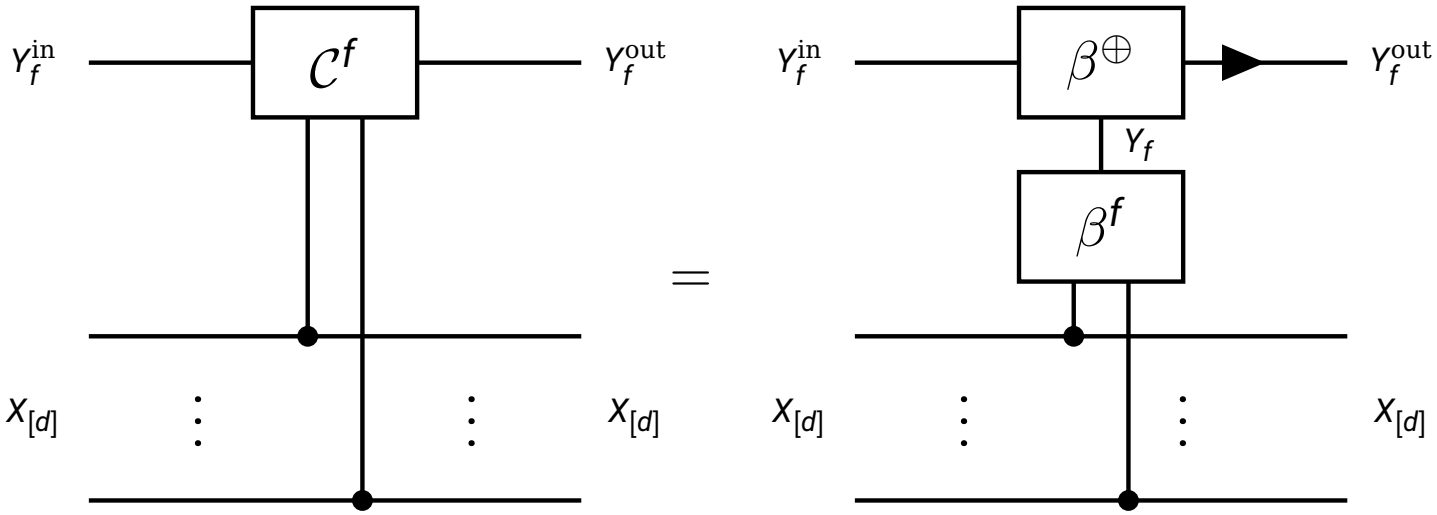

Same sparsity principles can be applied to get efficient quantum circuits for the oracles, and thus for the Grover operator.
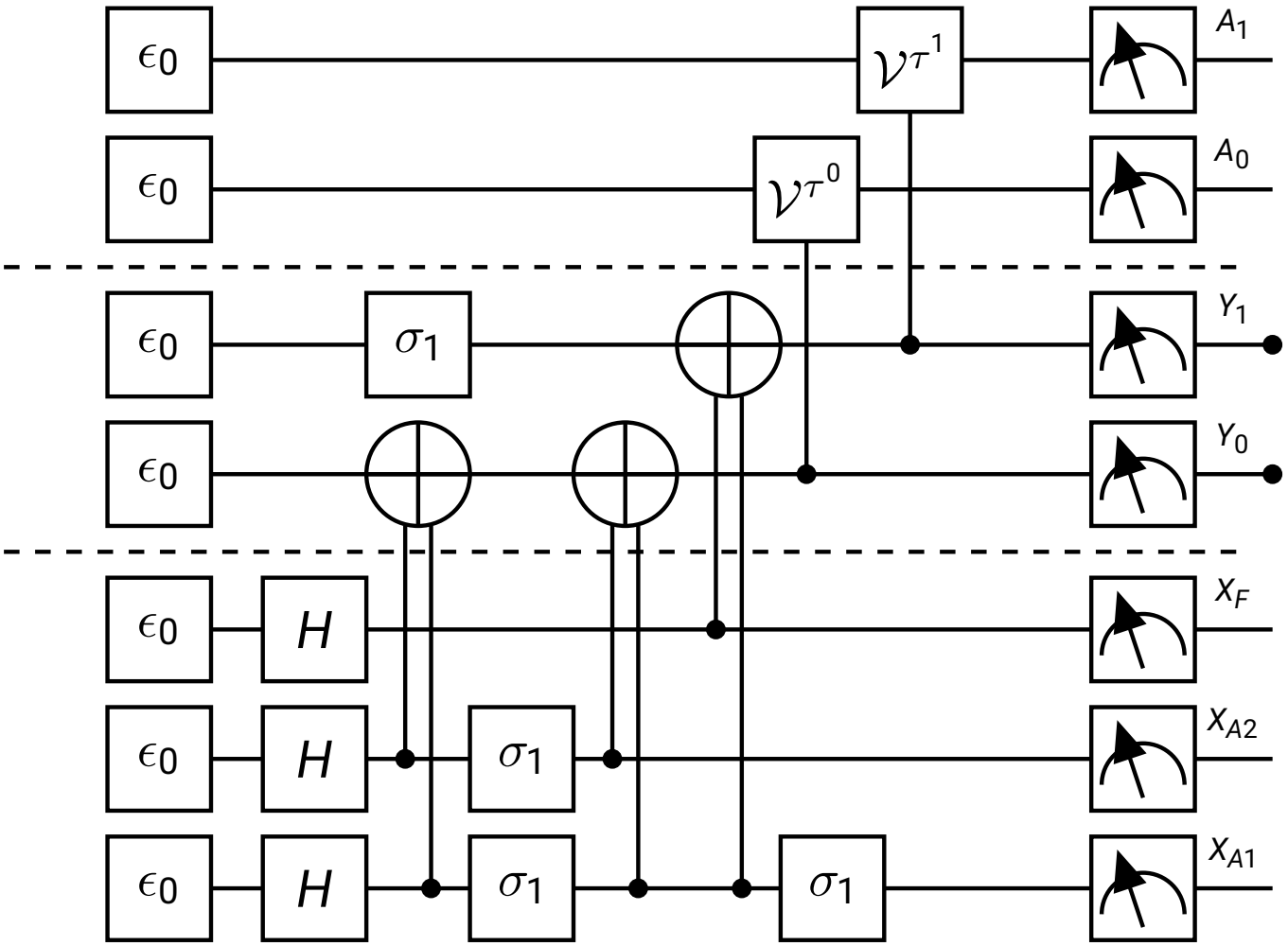
Application: Circuit for the Toy Accounting Problem