Linux-Cheatsheet

Cheatsheet for DevOps Engineers

This cheatsheet covers essential Linux commands required in the daily life of a DevOps Engineer, categorized for easy reference.

File Management:

Command	Description
*	Wildcard symbol for variable length, e.g., *.txt refers to all files with the TXT extension
?	Wildcard symbol referring to a single character, e.g., Doc?.docx can refer to Doc1.docx, DocA.docx, etc.
ls	List the names of files and subfolders the current directory. Options include -l, - a, -t which you may combine, e.g., -alt.
ls -l	Also show details of each item displayed, such as user permissions and the time/date when the item was last modified
ls -a	Also display hidden files/folders. May combined with ls -l to form ls -al.
ls -t	Sort the files/folders according to the last modified time/date, starting with the most recently modified item
cd	To the $HOME directory
cd ..	Up one level to enclosing folder or parent directory
cd /etc	To the /etc directory
cmp A B	Compare two files A and B for samenes No output if A and B are identical, outputs character and line number otherwise.

Command	Description
diff A B	Compare two files A and B for differ Outputs the difference.
pwd	Display the path of the current working directory.
mkdir X	Make a new directory named X inside the current directory.
mv A B	Move a file from path A to path B. Al used for renaming files.Examples:- Movi between directories folder1 and folder2: 'mv ./folder1/file.txt ./folder2' The file name will remain unchanged, and i new path will be ./folder2/file.txt Renaming a file: mv new_doc.t expenses.txt. The new file name expenses.txt.
cp A B	Copy a file from path A to path B. Usa similar to mv both in moving to a new directory and simultaneously renaming the file in its new location. Example: ./f1/file.txt ./f2/expenses.txt simultaneous copies the file file.txt to the new location with a new name expenses.txt
cp -r Y Z	Recursively copy a directory Y and its contents to Z. If Z exists, copy source Y into it; otherwise, create Z and Y becomes its subdirectory with Y's contents
rm X	Remove (delete) X permanently.
rm -r Y	Recursively delete a directory Y and its contents
rm -f X	Forcibly remove file X without prompts confirmation
rm -rf Y	Forcibly remove directory Y and its contents recursively
rmdir Y	Remove a directory Y permanently, provided Y is empty.

Command	Description
open X	Open X in its default program.
open -e X	Opens X in the default text editor (macOS: TextEdit)
touch X	Create an empty file X or update the access and modification times of X.
cat X	View contents of X.
cat -b X	Also display line numbers as well.
wc X	Display word count of X.
head X	Display the first 10 lines of X. If more th a single file is specified, each f preceded by a header consisting of the string "==> X <=='' where "X'' is the name of the file.
head -n 4 X	Show the first 4 lines of X.
tail X	Display the last (10, by default) lines of X. Ife more than a single file is specified, each file is preceded by a header consisting of the string "==> X <=='' where "X'' is the name of the file.
tail -n +1 X	Display entire contents of the file(s) X specified, with header of respective file name.
tail -f X	Display the last 10 lines of the file(s) X specified, and track changes appended to them at the end. Overwriting X or modifying X with a text editor such as vim would mess up this command's output.
less	Read a file with forward and backward navigation. Often used with pipe, e.g., cat file.txt
ln -s A S	Create symbolic link of path A to link name S

Input/Output Redirection:

Command	Description
echo TEXT	Display a line of TEXT or the contents of a variable.
open -e TEXT	Also interprets escape characters in TEXT, e.g., \\n new line, \\b backslash, \\t tab.
echo -n TEXT	Omits trailing newline of TEXT
cmd > file	Redirect output of a command cmd to a file. Overwrites pre-existing content of file.
cmd >& file	Redirect output of cmd to file. Overwrites pre-existing content of file. Suppresses the output of cmd.
cmd > /dev/null	Suppress the output of cmd.
cmd >> file	Append output of cmd to file
cmd < file	Read input of cmd from file.
cmd << delim	Read input of cmd from the standard input with the delimiter character delim to tell the system where to terminate the input. Example for counting the number of lines of ad-hoc input:wc -l << EOF> I like> apples> and> oranges.> EOF 4 Hence there are only 4 lines in the standard input delimited by EOF.
cmd <<< string	Input a text string to cmd.
cmd 2> foo	Redirect error messages of cmd to foo.
cmd 2>> foo	Append error messages of cmd to foo
cmd &> file	Redirect output and error messages of cmd to file

Search and Filter:

Command	Description
grep patt /path/to/src	Search for a text pattern patt in X. Commonly used with pipe e.g., `ps aux
grep -r patt /path/to/src	Search recursively (the target directory /path/to/src and its subdirectories) for a text pattern patt.
grep -v patt X	Return lines in X not matching the specified patt.
grep -l patt X	Write to standard output the names of files containing patt.
grep -i patt X	Perform case-insensitive matching on X. Ignore the case of patt.
find	find files
find /path/to/src -name "*.sh"	Find all files in /path/to/src matching the pattern "*.sh" in the file name
find /home -size +100M	Find all files in the /home directory larger than 100MB.
locate name	Find files and directories by name.
sort X	Arrange lines of text in X alphabetically or numerically.

www.trainwithshubham.com

Archives:

Command	Description
tar	Manipulate archives with .tar extension.
tar -v	Get verbose output while manipulating TAR archives. May combine this option with others, e.g., tar -tvf.
tar -cf archive.tar Y	Create a TAR archive named archive.tar containing Y.
tar -xf archive.tar	Extract the TAR archive named archive.tar.
tar -tf archive.tar	List contents of the TAR archive named archive.tar.
tar -czf archive.tar.gz Y	Create a gzip-compressed TAR archive named archive.tar.gz containing Y.
tar -xzf archive.tar.gz	Extract the gzip-compressed TAR archive named archive.tar.gz.
tar -cjf archiave.tar.bz2 Y	Create a bzip2-compressed TAR archive named archive.tar.bz2 containing Y.
tar -xjf archive.tar.bz2	Extract the bzip2-compressed TAR archive named archive.tar.bz2.
gzip	Manipulate archives with .gz extension.
gzip Y	Create a gzip archive named Y.gz containing Y.
gzip -l Y.gz	List contents of gzip archive Y.gz.
gzip -d Y.gzgunzip Y.gz	Extract Y.gz and recover the original file Y
bzip2	Manipulate archives with .bz2 extension.

Command	Description
bzip2 Y	Create a bzip2 archive named Y.bz2 containing Y.
bzip2 -d Y.gzbunzip2 Y.gz	Extract Y.bz2 and recover the original file Y.
zip -r Z.zip Y	Zip Y to the ZIP archive Z.zip.
unzip Z.zip	Unzip Z.zip to the current directory
unzip Z.zip	List contents of Z.zip

File Transfer:

Command	Description
ssh user@access	Connect to access as user.
ssh access	Connect to access as your local username.
ssh -p port user@access	Connect to access as user using port.
scp [user1@]host1:[path1] [user2@]host2:[path2]	Login to hostN as userN via secure copy protocol for N=1,2.Example usage:scp alice@pi:/home/source bob@arduino:/destinationpath1 and path2 may be local or remote, but ensure they're absolute rather than relative paths, e.g., /var/www/*.html, /usr/bin.If user1 and user2 are not specified, scp will use your local username.
scp -P port [user1@]host1:[path1] [user2@]host2:[path2]	Connect to hostN as userN using port for N=1,2.
scp -r [user1@]host1:[path1] [user2@]host2:[path2]	Recursively copy all files and directori from path1 to path2.
sftp [user@]access	Login to access as user via secure file transfer protocol. If user is not specified your local username will be used.

Command	Description
sftp access	Connect to access as your local username.
sftp -P port user@access	Connect to access as user using port.
rsync -a [path1] [path2]	Synchronize [path1] to [path2], preserving symbolic links, attributes, permissions, ownerships, and other settings.
rsync -avz host1:[path1] [path2]	Synchronize [path1] on the remote host host1 to the local path [path2], preserving symbolic links, attributes, permissions, ownerships, and other settings. It also compress the data during the transfer.

File Permissions:

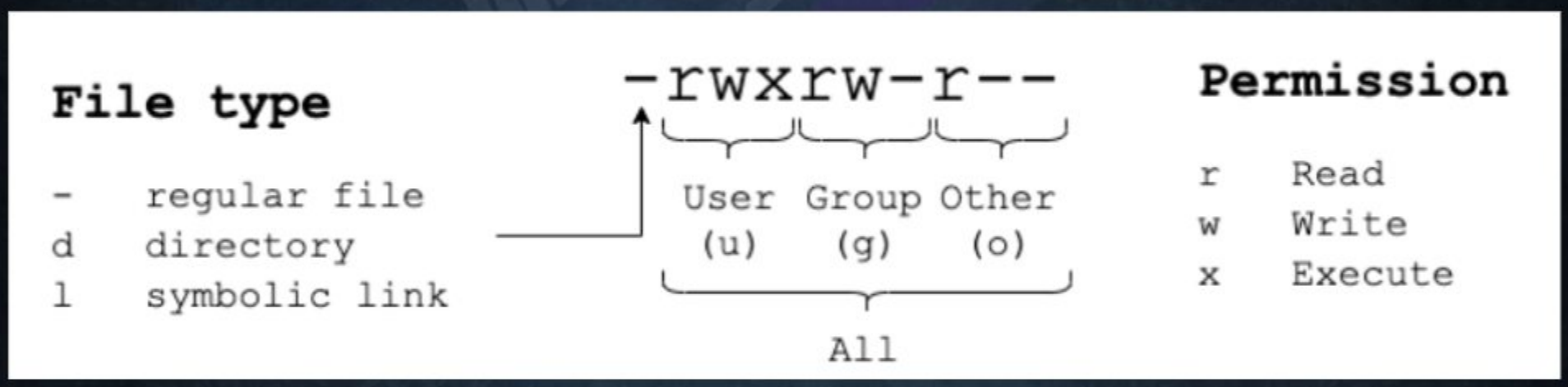

Command	Description
chmod permission file	Change permissions of a file or directory. Permissions may be of the form [u/g/o/a] [+/-/=][r/w/x] (see examples below) or a three-digit octal number.
chown user2 file	Change the owner of a file to user2
chgrp group2 file	Change the group of a file to group2

Usage examples:

- *chmod +x testfile* *allow all users to execute the file*
- *chmod u-w testfile* *forbid the current user from writing or changing the file*
- *chmod u+wx,g-x,o=rx testfile* *simultaneously add write and execute permissions to use remove execute permission from group, and set the permissions of other users to only read and write*

Numeric Representation:

The table below compares Linux file permissions in octal form and in the format [u/g/o/ [+/-/=][r/w/x].

Octal	Permission(s)	Equivalent to application of
0	No permissions	-rwx
1	Execute permission only	=x
2	Write permission only	=w
3	Write and execute permissions only: 2 + 1 = 3	=wx
4	Read permission only	=r
5	Read and execute permissions only: 4 + 1 = 5	=rx
6	Read and write permissions only: 4 + 2 = 6	=rw
7	All permissions: 4 + 2 + 1 = 7	=rwx

Examples:

- **chmod 777 testfile** *allow all users to execute the file*
- **chmod 177 testfile** *restrict current user (u) to execute-only, while the group (g) and other users (o) have read, write and execute permissions*
- **chmod 365 testfile** *user (u) gets to write and execute only; group (g), read and write only; others (o), read and execute only.*

System Information:

Command	Description
uname	Show the Linux system information.
uname -a	Detailed Linux system information
uname -r	Kernel release information, such as kernel version
uptime	Show how long the system is running and load information.
su sudo	Superuser; use this before a command that requires root access e.g., su shutdown
cal	Show calendar where the current date is highlighted.
date	Show the current date and time of the machine.
halt	Stop the system immediately.
shutdown	Shut down the system.
reboot	Restart the system.
last reboot	Show reboot history.
man COMMAND	Shows the manual for a given COMMAND. To exit the manual, press "q".
hostname	Show system host name
hostname -I	Display IP address of host
cat /etc/*-release	Show the version of the Linux distribution installed. For example, if you're using Red Hat Linux, you may replace * with redhat.

Hardware:

Command	Description
dmesg	Display messages in kernel ring buffer (data structure that records messages related to the operation of the program running the operating system)
cat /proc/cpuinfo	Display information about the central processing unit (CPU)
cat /proc/meminfo	Display memory information
lspci -tv	Displays information about each Peripheral Component Interconnect (PCI) device on your system.The option -t outputs the information as a tree diagram, and -v is for verbose output.
lsusb -tv	Display information about Universal Serial Bus (USB) devices and the devices connected to them.The option -t outputs the information as a tree diagram, and -v is for verbose output.
dmidecode	Display system hardware components, serial numbers, and BIOS version
hdparm -i /dev/sda	Display information about the disk sda
hdparm -tT /dev/sda	Perform a read speed test on the disk sda
badblocks -s /dev/sda	Test for unreadable blocks on the disk sda

Disk Usage:

Command	Description
df	Display free disk space.
du	Show file/folder sizes on disk
du -ah	Disk usage in human readable format (KB, MB etc.)
du -sh	Total disk usage of the current directory
du -h	Free and used space on mounted filesystems
du -i	Free and used inodes on mounted filesystems
fdisk -l	List disk partitions, sizes, and types
free -h	Display free and used memory in human readable units.
free -m	Display free and used memory in MB.
free -g	Display free and used memory in GB.

Process Management and Performance Monitoring:

Command	Description
&	Add this character to the end of a command/process to run it in the background
ps	Show process status. Often used with grep e.g., `ps aux
ps -eps -A	Either of these two commands prints all running processes in the system
ps -ef	Print detailed overview
ps -U root -u root	Display all processes running under the account root.

Command	Description
ps -eo pid,user,command	Display only the columns pid, user and command in ps output
top	Display sorted information about processes
htop	Display sorted information about processes with visual highlights. It allows you to scroll vertically and horizontally, so you can see every process running on your system and entire commands.
atop	Display detailed information about processes and hardware
kill PID	Kill a process specified by its process ID PID, which you obtain using the ps command
killall proc1	Kill all processes containing proc1 in their namess
lsof	List all open files on the system. (This command helps you pinpoint what files and processes are preventing you from successfully ejecting an external drive.)
lsof -u root	List all files on the system opened by the root user. As the output can be long, you may use `lsof -u root
mpstat 1	Display processor-related statistics, updated every second (hence the 1, whereas mpstat 2 refreshes the output every 2 seconds)
vmstat 1	Display virtual memory statistics (information about memory, system processes, paging, interrupts, block I/O, disk, and CPU scheduling), updated every (1) second
iostat 1	Display system input/output statistics for devices and partitions. virtual memory statistics, updated every (1) second
tail -n 100 /var/log/messages	Display the last 100 lines in the system logs.Replace /var/log/messages with /var/log/syslog for Debian-based systems.

Command	Description
tcpdump -i eth0	Capture and display all packets on interface eth0
tcpdump -i eth0 port 80	Monitor all traffic on interface eth0 port 80 (HTTP)
watch df -h	Execute df -h and show periodic updates, To exit, press Ctrl+C

User Management:

Command	Description
who	Display who is logged in
w	Display what users are online and what they are doing
users	List current users
whoami	Display what user you are logged in as
id	Display the user ID and group IDs of your current user
last	Display the last users who have logged onto the system
groupadd gp1	Create a group named gp1
useradd -c "Alice Bob" -m ab1	Create an account named ab1, with a comment of "Alice Bob" and create the new user's home directory
userdel ab1	Delete the account named ab1
usermod -aG gp1 ab1	Add the account ab1 to the group gp1

Networking:

Command	Description
ifconfig	Display all network interfaces with IP addresses
ifconfig -a	Display all network interfaces, even if any of them is down, with IP addresses
ifconfig eth0	Display IP addresses and details of the eth0 interface
ip a	Another way to display all network interfaces with IP addresses
ethtool eth0	Query or control network driver and hardware settings of the interface eth0
netstat	Print open sockets of network connections, routing tables, interface statistics, masquerade connections, and multicast memberships.Pipe with the less command: e.g., `netstat -a
netstat -a	Show both listening and non-listening sockets
netstat -l	Show only listening sockets
netstat -nutlp	Show listening TCP and UDP ports and corresponding programs
ping host	Send ICMP echo request to host, which may be a symbolic name, domain name or IP address
whois domain	Display whois information for domain
dig domain	Display DNS information for domain
dig -x addr	Do a reverse lookup on an IPv4 or IPv6 address addr
host domain	Display DNS IP address for domain
wget LINK	Download from location LINK

Command	Description
curl LINK	Display the HTML source of LINK.
ufw allow port	Allow traffic on a specific port through the firewall.
ufw status	Check the status of the Uncomplicated Firewall.
nmcli	Command-line tool for managing network connections

Package Management Commands:

Linux Distribution	Debian/Ubuntu	Rocky / Fedora / Red Hat Enterprise Linux	Arch Linux / Manjaro / Garuda / Chakra
Update list of packages available from remote repositories	sudo apt update	dnf check-update	The command pacman -Syy achieves this purpose but may damage your system.Use pacman -Syu instead.
Upgrade installed packages	sudo apt upgrade	sudo dnf upgrade	pacman -Syu
Find a package with keyword in the name	apt search keyword	dnf search keyword	pacman -Ss keyword
View description and summary information about a package	apt show package	dnf info package	pacman -Si package
Install a package (with appropriate file extension) the local file system	sudo dpkg -i package.deb	sudo dnf install package.rpm	pacman -S package
Remove / uninstall a package	sudo apt remove package	sudo dnf erase package	pacman -R package