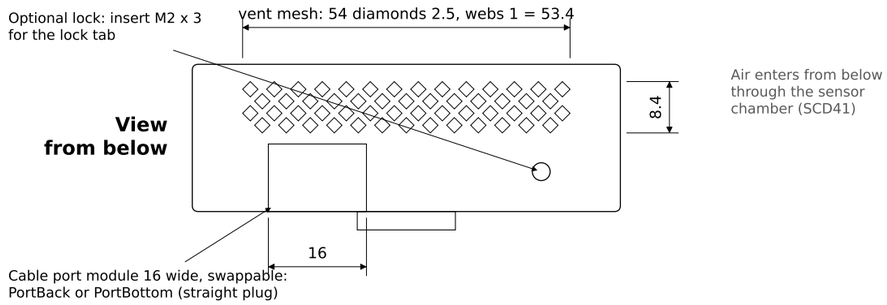


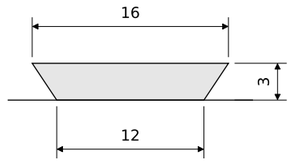


Fasteners (one screw type only)
10 (+2) heat-set inserts M2 x 3, OD 3.2, hole Ø2.9 x 3.4
10 (+2) button head screws M2 x 4, ISO 7380
display 4 | cover 4 | carrier 2 | (+2 optional lock tab)

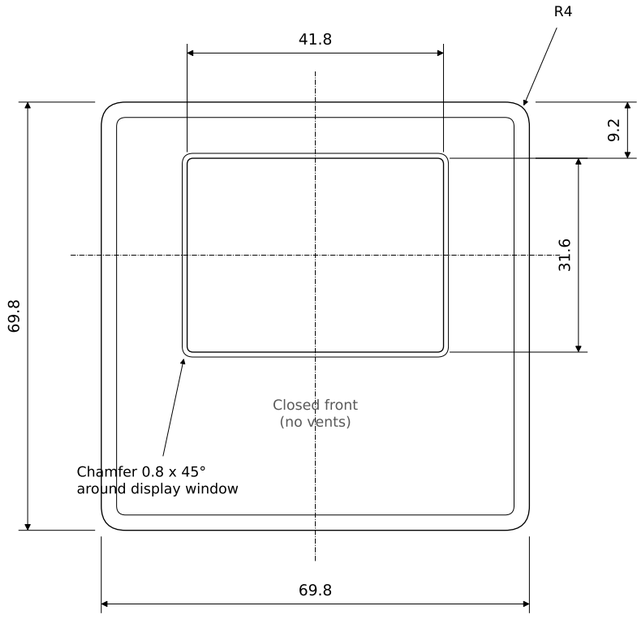


**Front view**

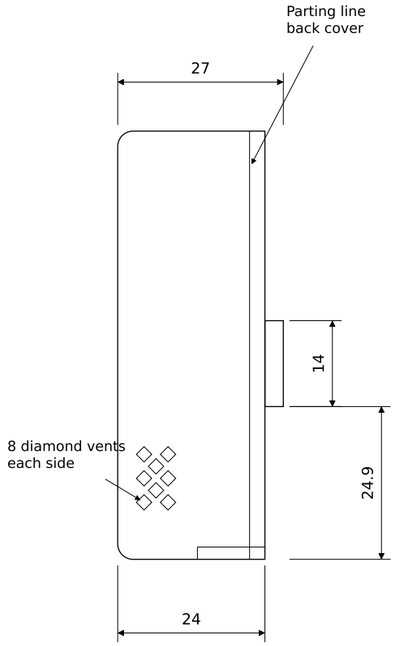


**Left side view**

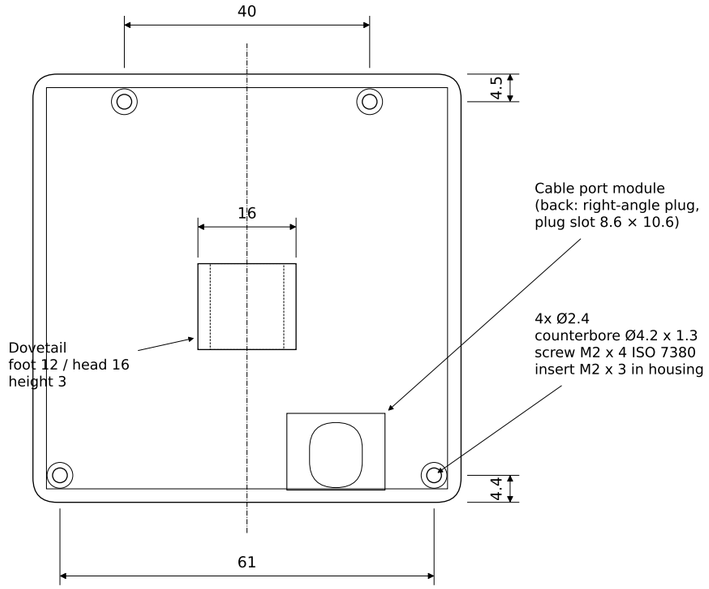


**Rear view**

| Project | Title | Material | Scale |
|---|---|---|---|
| **CO2 Wall Sensor** | **Device (housing + back cover)** | **PETG (or PLA)** | **1:1** |
| Author | General tolerance | Date | Format |
| **Tobias Schneider** | **ISO 2768-m** | **2026-10-08** | **A3** |
| Units | Projection | Source | Sheet |
| **mm** | **ISO-E (first angle)** | **generate_enclosure.py** | **1 / 2** |
| Generated from the parametric Fusion model. | Verify placeholder dimensions (SCD41 board) before printing. | | |

## Wall plate for flush wall box, front view

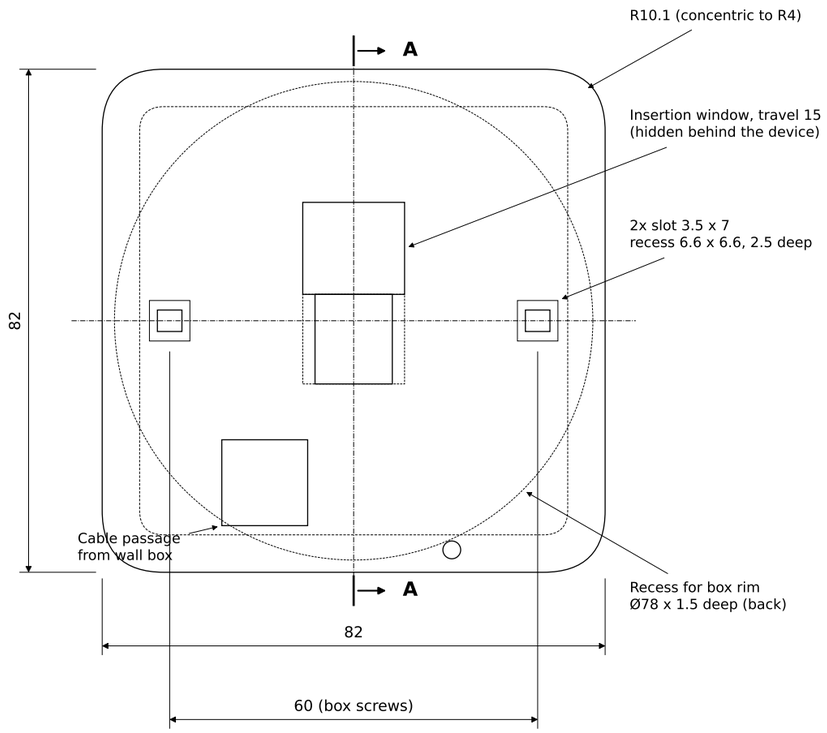


## Section A-A (centre)

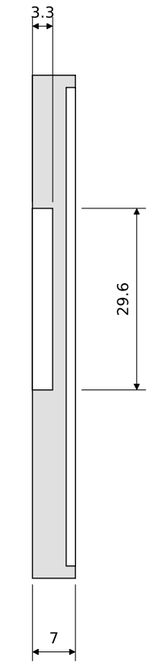


Device: insert from the front,
slide 15 mm down

## Desk stand, side view in use

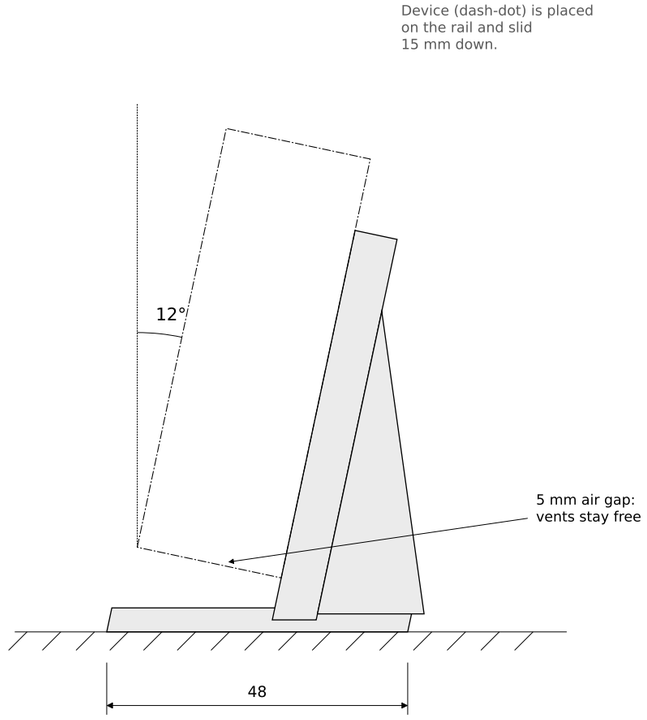


| | | | |
|---|---|---|---|
| Project<br>**CO2 Wall Sensor** | Title<br>**Wall plate and desk stand** | Material<br>**PETG (or PLA)** | Scale<br>**1:1** |
| Author<br>**Tobias Schneider** | General tolerance<br>**ISO 2768-m** | Date<br>**2026-10-08** | Format<br>**A3** |
| Units<br>**mm** | Projection<br>**ISO-E (first angle)** | Source<br>**generate_enclosure.py** | Sheet<br>**2 / 2** |
| Generated from the parametric Fusion model. | Verify placeholder dimensions (SCD41 board) before printing. | | |