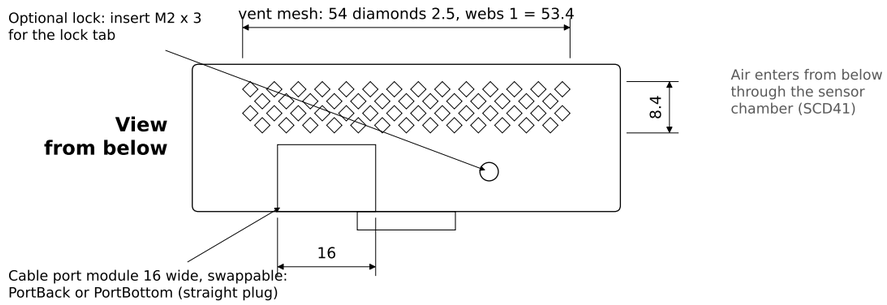

Detail rail (2:1)

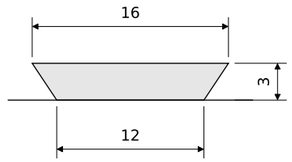

Clearance in slot: 0.3 per side

Fasteners (one screw type only)
10 (+2) heat-set inserts M2 x 3, OD 3.2, hole Ø3 x 3.4
10 (+2) button head screws M2 x 4, ISO 7380
display 4 | cover 4 | carrier 2 | (+2 optional lock tab)

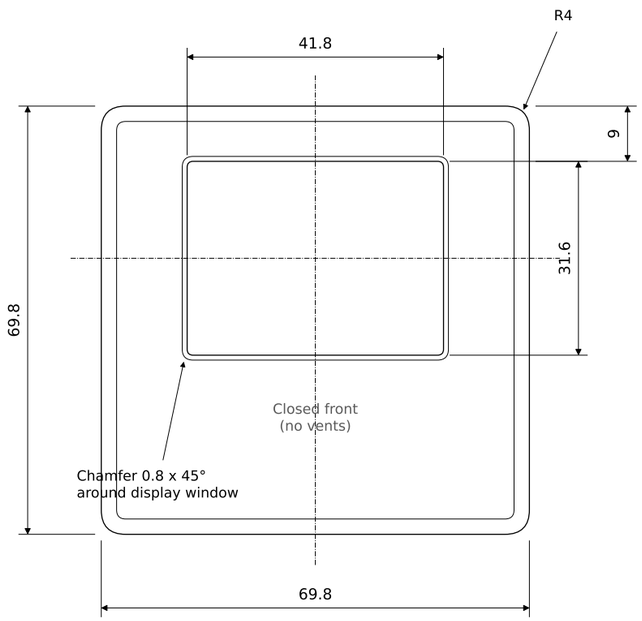

Front view

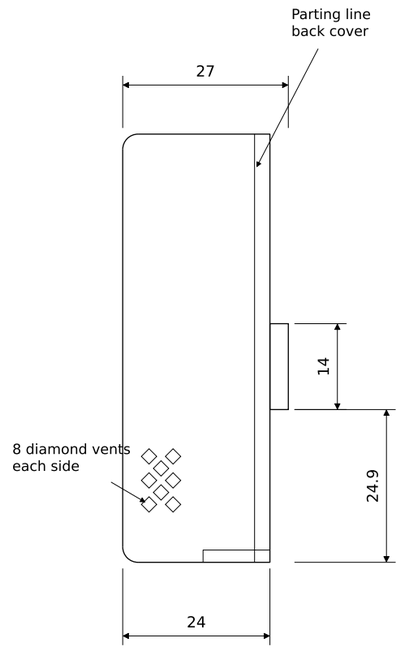

Left side view

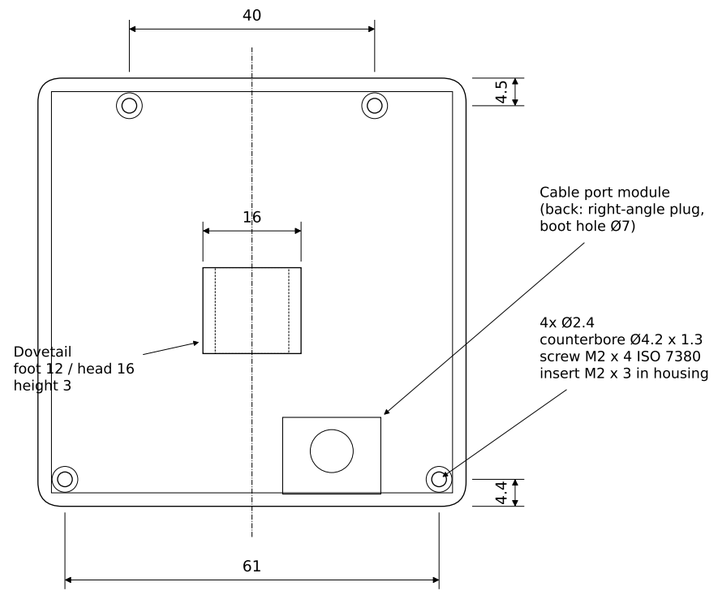

Rear view

Project	Title	Material	Scale
CO2 Wall Sensor	**Device (housing + back cover)**	**PETG (or PLA)**	**1:1**
Author	General tolerance	Date	Format
Tobias Schneider	**ISO 2768-m**	**2026-10-06**	**A3**
Units	Projection	Source	Sheet
mm	**ISO-E (first angle)**	**generate_enclosure.py**	**1 / 2**

Generated from the parametric Fusion model. Verify placeholder dimensions (SCD41 board, display glass) before printing.

Wall plate for flush wall box, front view

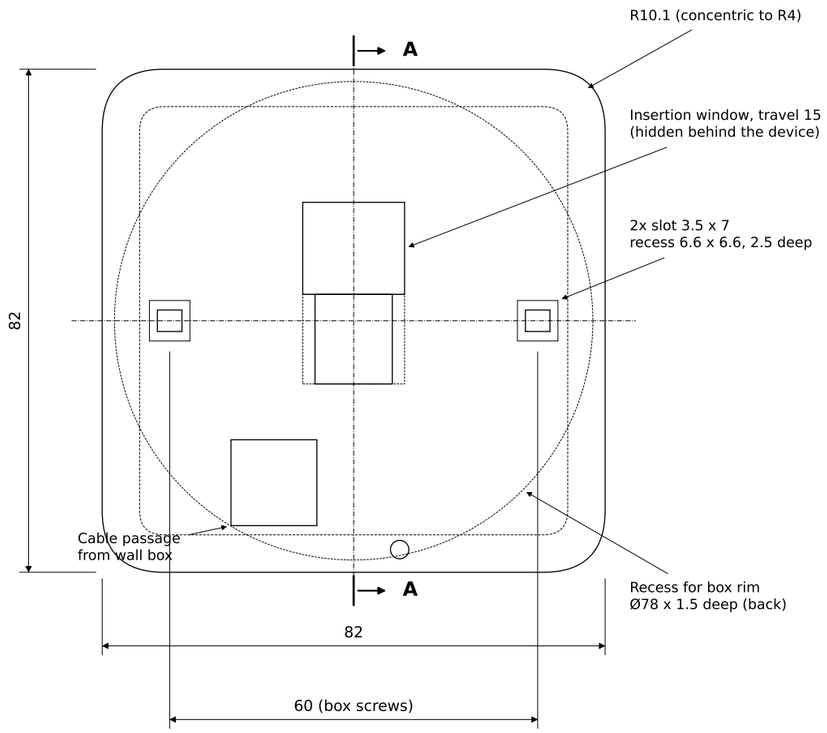

Section A-A (centre)

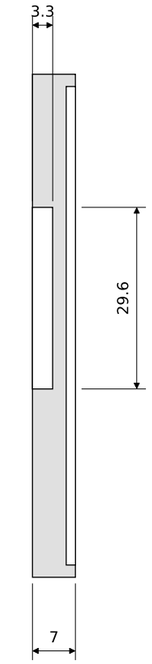

Device: insert from the front,
slide 15 mm down

Desk stand, side view in use

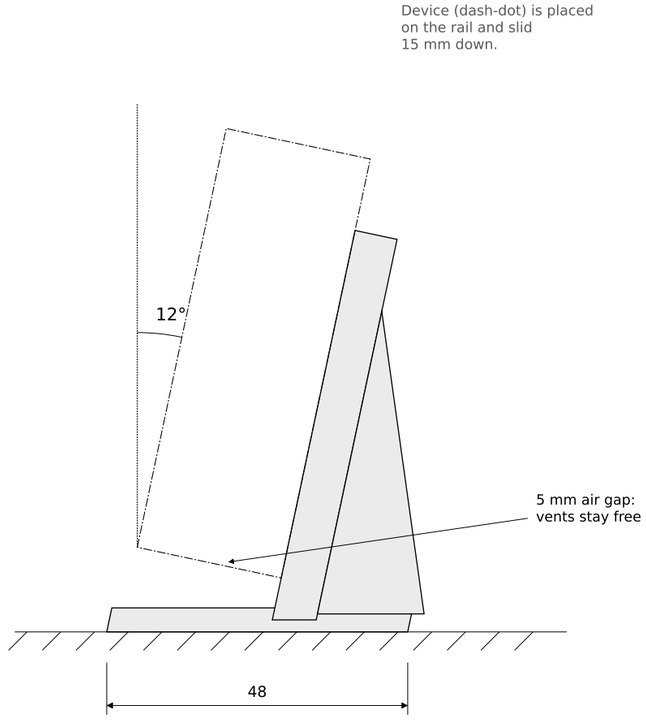

Project **CO2 Wall Sensor**	Title **Wall plate and desk stand**	Material **PETG (or PLA)**	Scale **1:1**
Author **Tobias Schneider**	General tolerance **ISO 2768-m**	Date **2026-10-06**	Format **A3**
Units **mm**	Projection **ISO-E (first angle)**	Source **generate_enclosure.py**	Sheet **2 / 2**
Generated from the parametric Fusion model.	Verify placeholder dimensions (SCD41 board, display glass) before printing.		