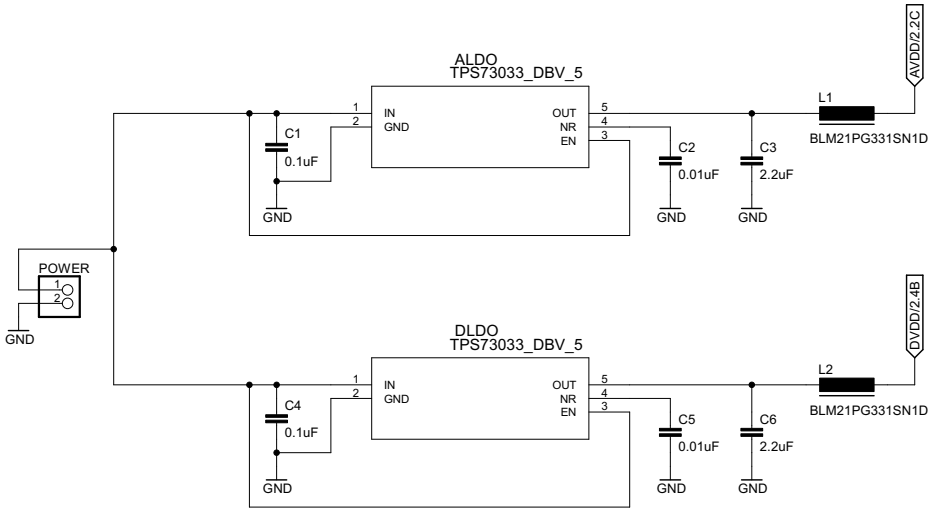

Power supplies	Rev C
	ECG-BioZ-Holter
	2015-04-17 15:35:10
	Sheet: 1/4

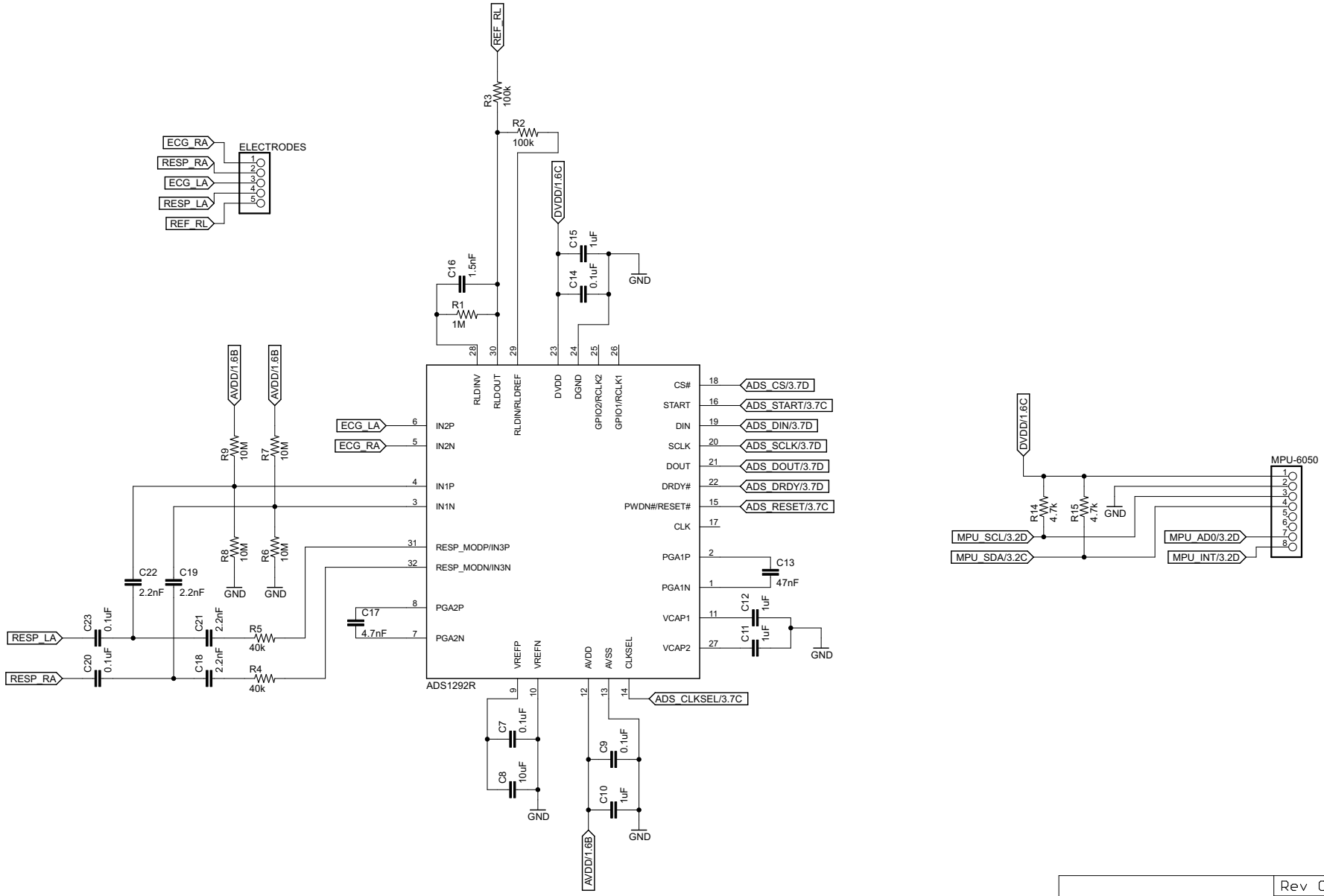

ECG FE and Acc+Gyro	Rev C
	ECG-BioZ-Holter
	2015-04-17 15:35:10
	Sheet: 2/4

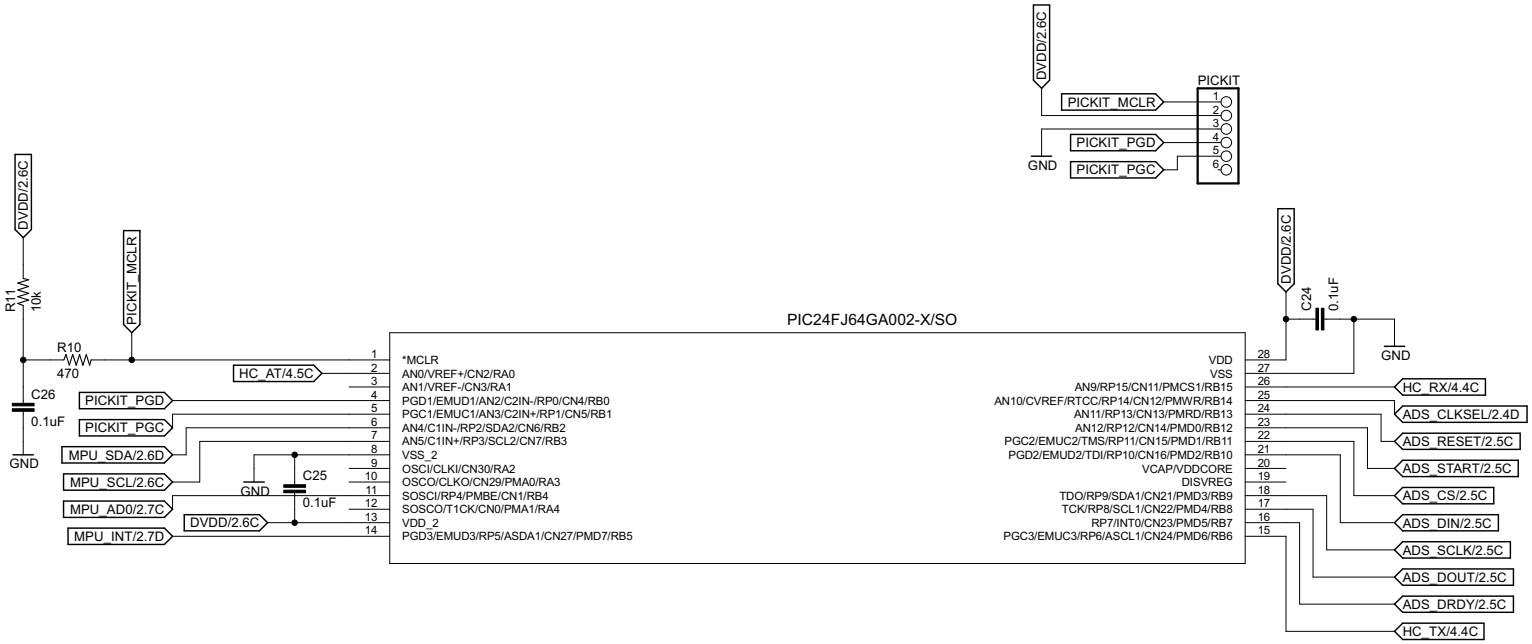

Microcontroller	Rev C
	ECG-BioZ-Holter
	2015-04-17 15:35:10
	Sheet: 3/4

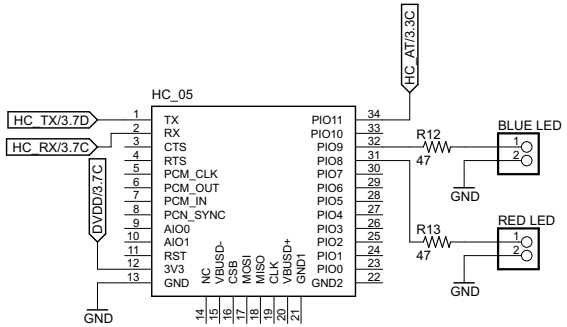

Bluetooth module	Rev C
	ECG-BioZ-Holter
	2015-04-17 15:35:10
	Sheet: 4/4