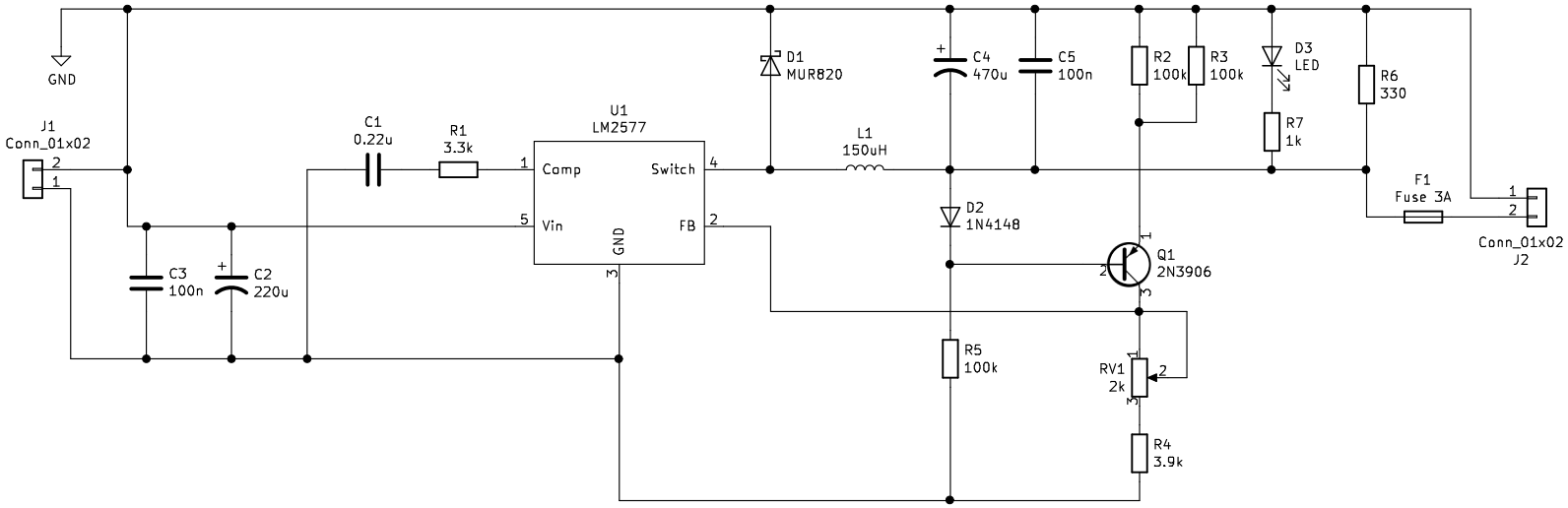

Sheet: /
File: boost-30v-15v.sch

Title:

Size: A4	Date:	**Rev:**
KiCad E.D.A. eeschema 5.1.3-ffb9f2284ubuntu16.04.1		Id: 1/1