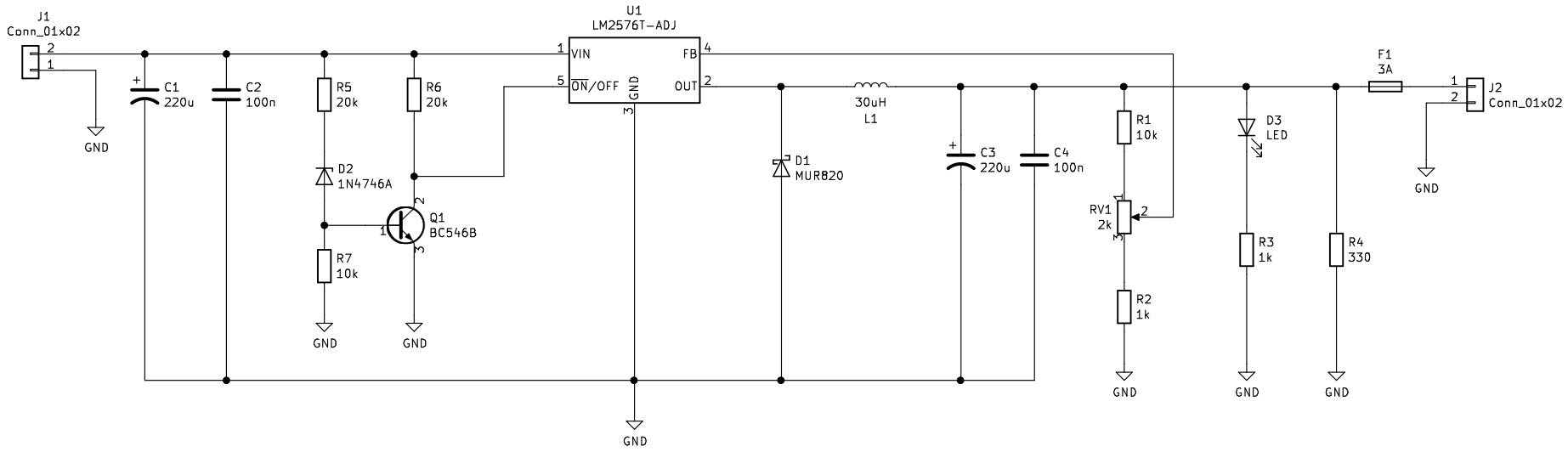

Sheet: /
File: buck30v15v_imprimir.sch

Title: Switching power supply: 30v to 15v

Size: A4	Date:	**Rev:**
KiCad E.D.A. eeschema 5.1.3-ffb9f2284ubuntu16.04.1		Id: 1/1