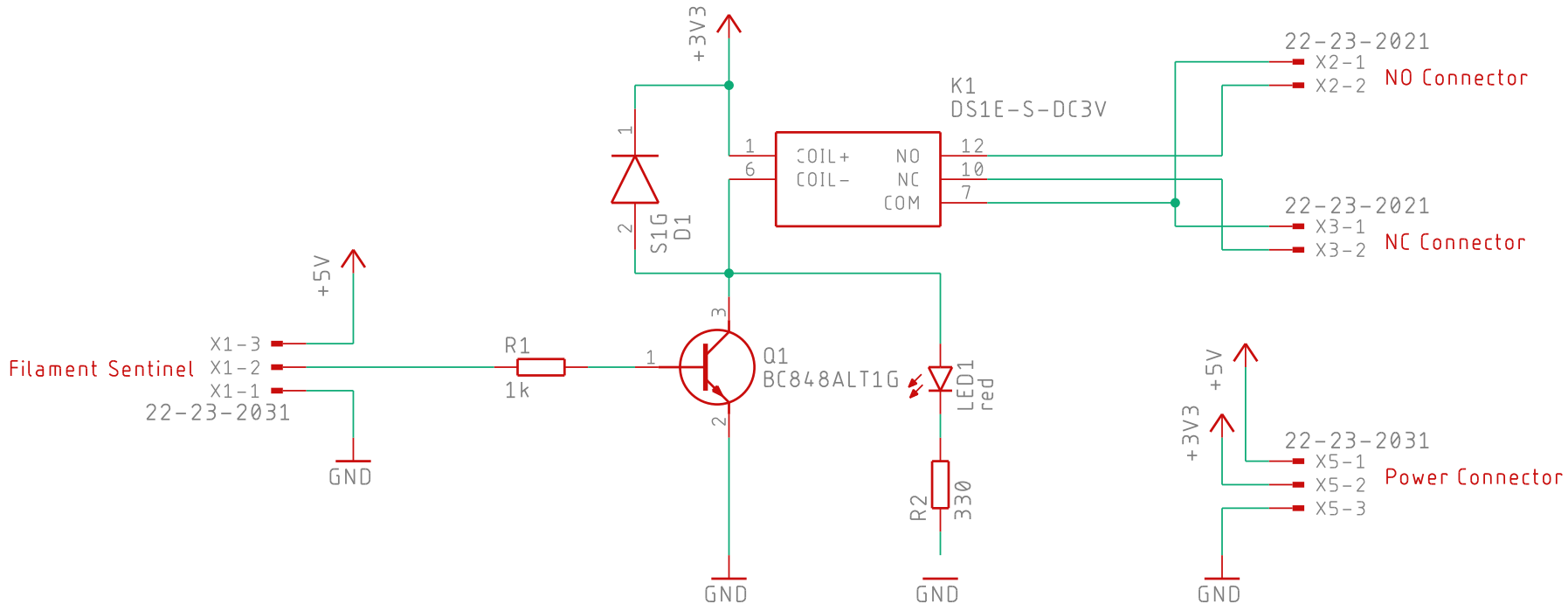

Mini PCB designed to use the DyzeDesign Filament Sentinel with the Duet3D Magnetic Filament Monitor (connect as MicroSwitch).

Filament Sentinel:
https://dyzedesign.com/shop/filament-detector/sentinel/

Duet3D Magnetic Filament Monitor:
https://www.duet3d.com/MagneticFilamentMonitor

Design by Tobias X. Vogel

filament-sentinel-microswitch

30.10.20 17:09

Sheet: 1/1

Rev B