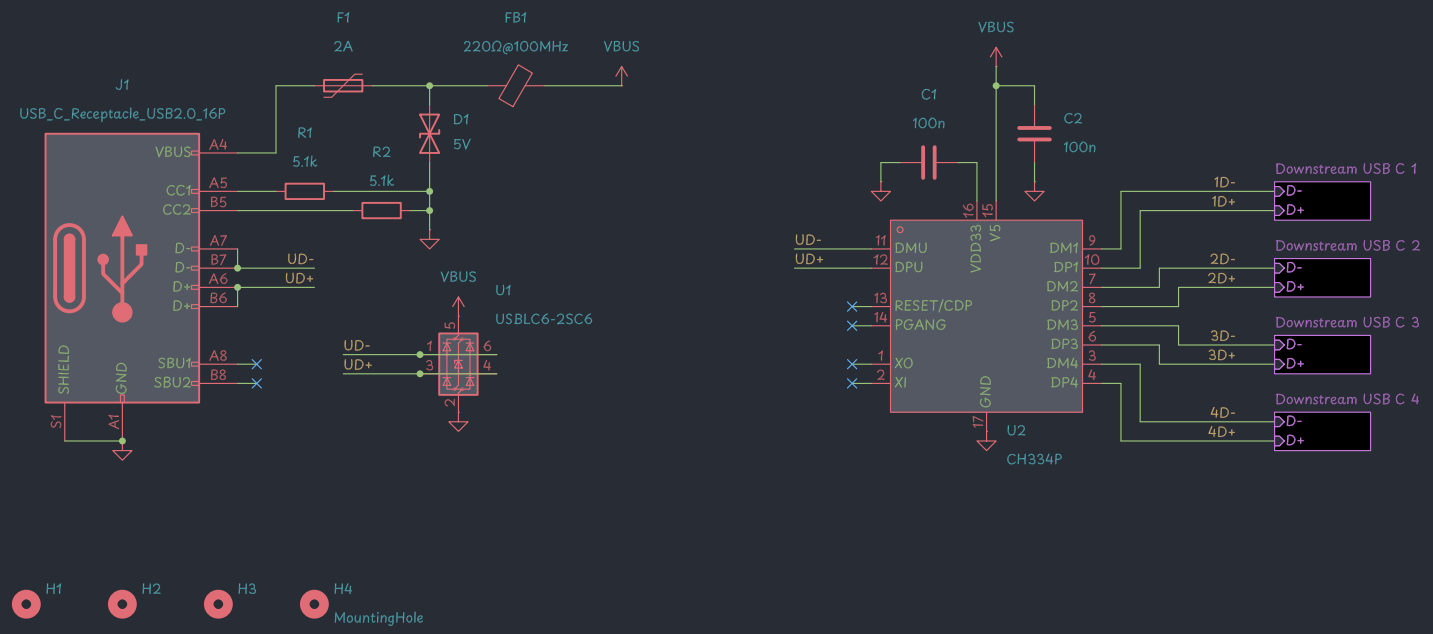

Sheet: /
File: skibidi-birthday.kicad_sch

Title:

Size: A4	Date:	**Rev:**
KiCad E.D.A. 10.0.0		Id: 1/5

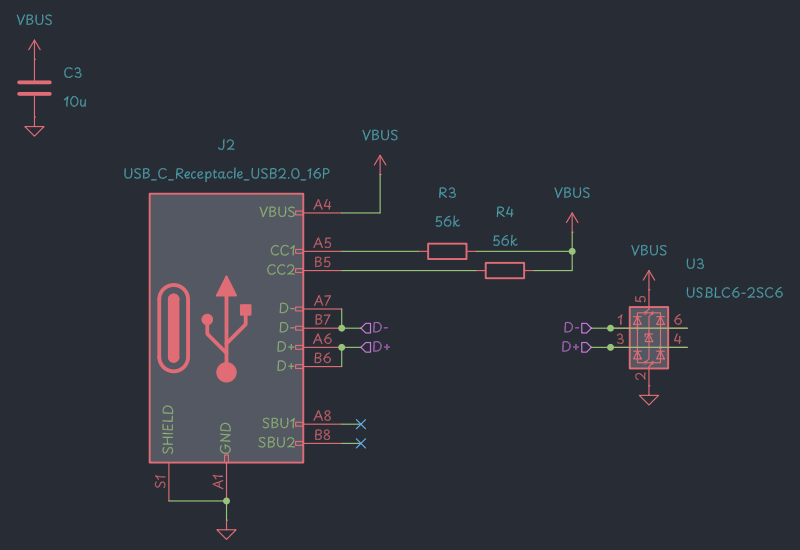

Sheet: /Downstream USB C 1/
File: usb_c.kicad_sch

Title:

Size: A4	Date:	Rev:
KiCad E.D.A. 10.0.0		Id: 2/5

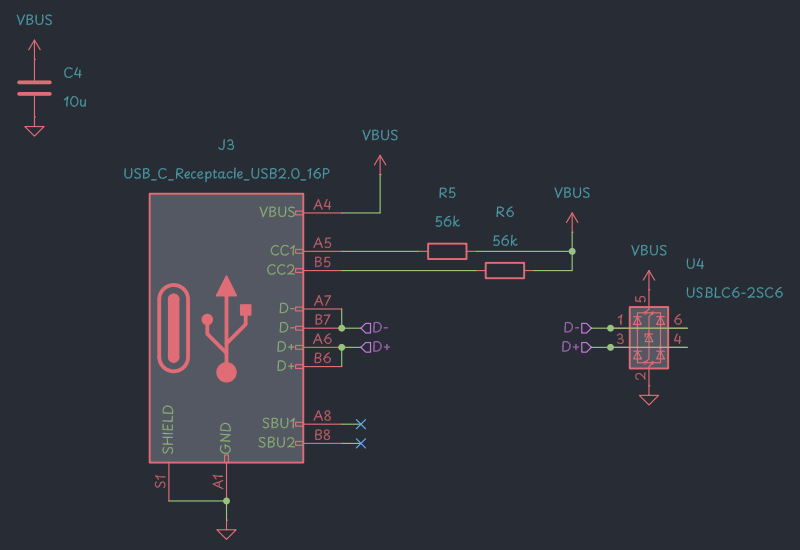

Sheet: /Downstream USB C 2/
File: usb_c.kicad_sch

Title:

Size: A4	Date:	Rev:
KiCad E.D.A. 10.0.0		Id: 3/5

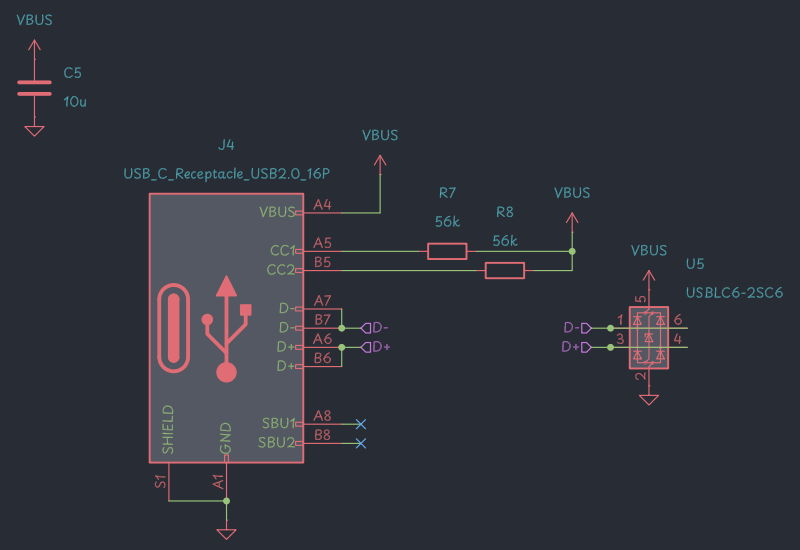

Sheet: /Downstream USB C 3/
File: usb_c.kicad_sch

Title:

Size: A4	Date:	Rev:
KiCad E.D.A. 10.0.0		Id: 4/5

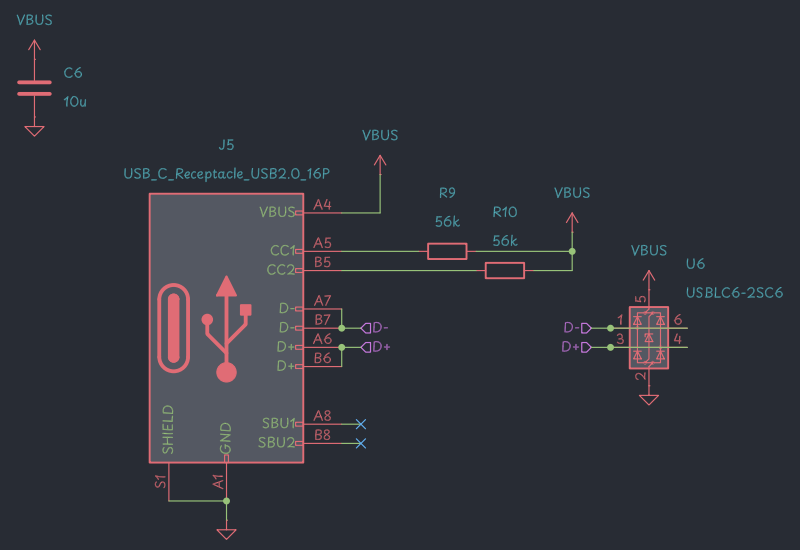

Sheet: /Downstream USB C 4/
File: usb_c.kicad_sch

Title:

Size: A4	Date:	Rev:
KiCad E.D.A. 10.0.0		Id: 5/5