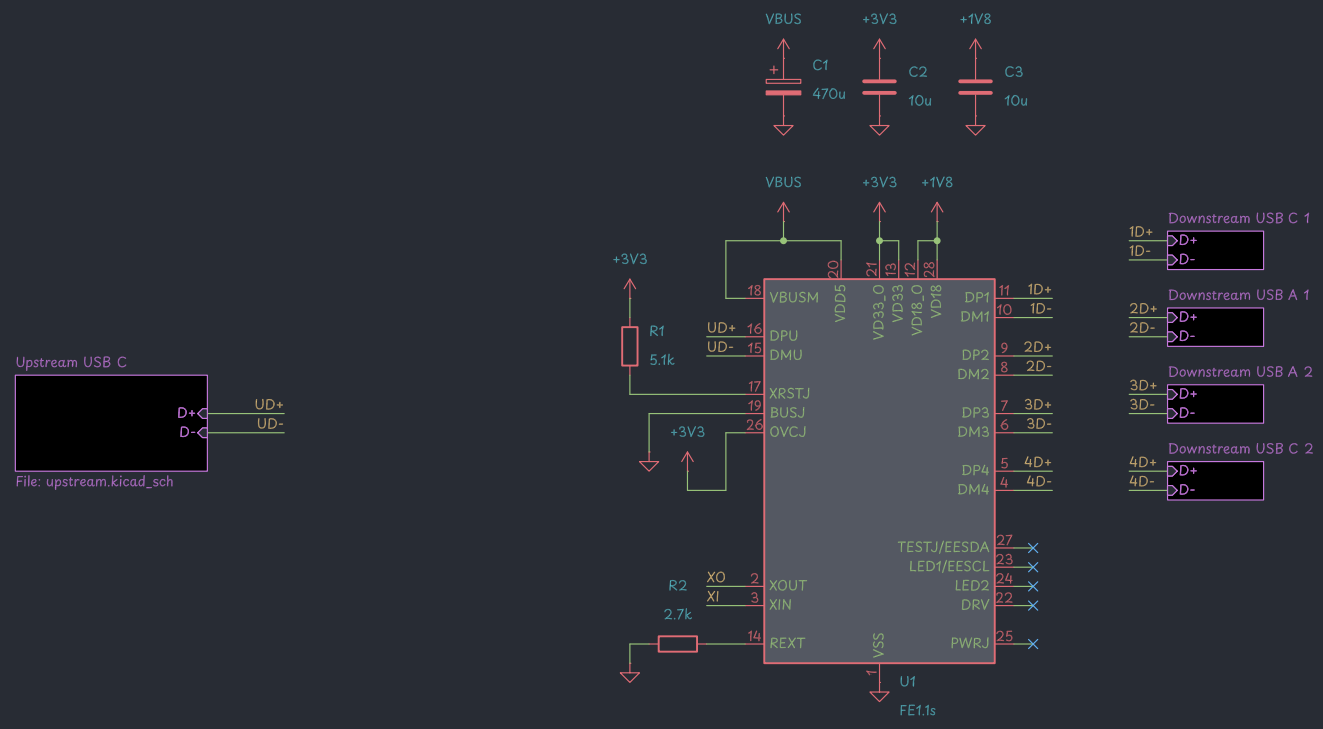

Toby Cm's Lab x Hack Club

Sheet: /

File: skibidi-phone-usb-hub.kicad_sch

Title: Skibidi Phone USB Hub

Size: A4	Date: 2026-03-20	**Rev: V1**
KiCad E.D.A. 9.0.7		Id: 1/6

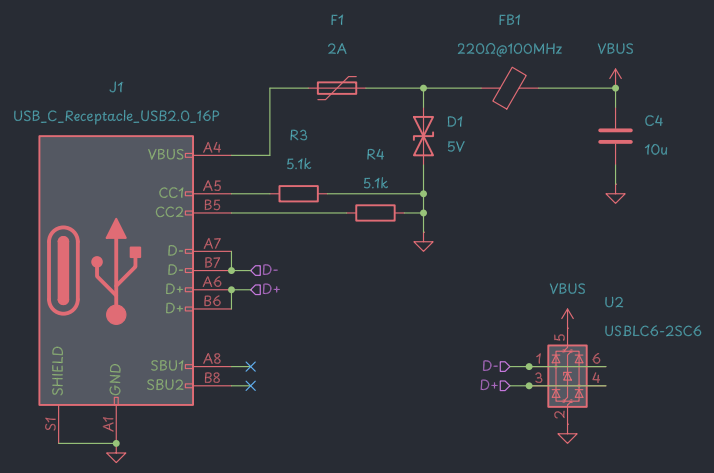

Sheet: /Upstream USB C/
File: upstream.kicad_sch

Title:

Size: A4	Date:	Rev:
KiCad E.D.A. 9.0.7		Id: 2/6

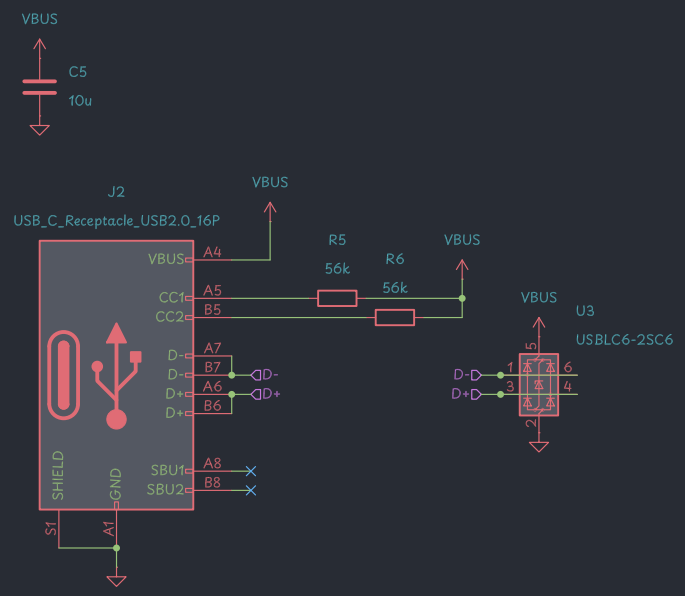

Sheet: /Downstream USB C 1/
File: usb_c.kicad_sch

Title:

Size: A4	Date:	Rev:
KiCad E.D.A. 9.0.7		Id: 3/6

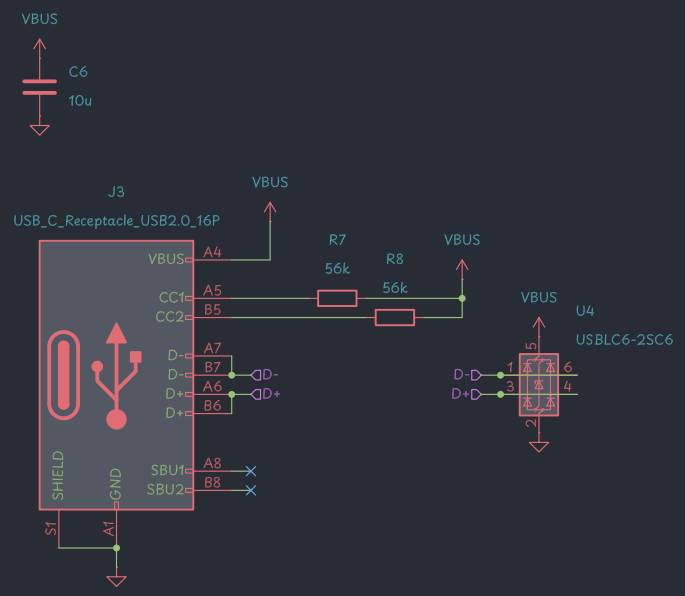

Sheet: /Downstream USB C 2/
File: usb_c.kicad_sch

Title:

Size: A4	Date:	Rev:
KiCad E.D.A. 9.0.7		Id: 4/6

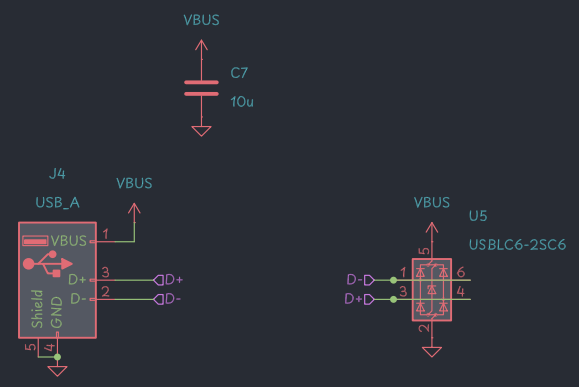

Sheet: /Downstream USB A 1/
File: usb_a.kicad_sch

Title:

Size: A4	Date:	**Rev:**
KiCad E.D.A. 9.0.7		Id: 5/6

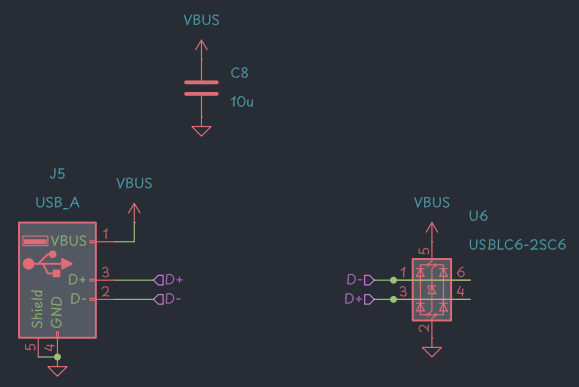

Sheet: /Downstream USB A 2/
File: usb_a.kicad_sch

Title:

Size: A4	Date:	Rev:
KiCad E.D.A. 9.0.7		Id: 6/6