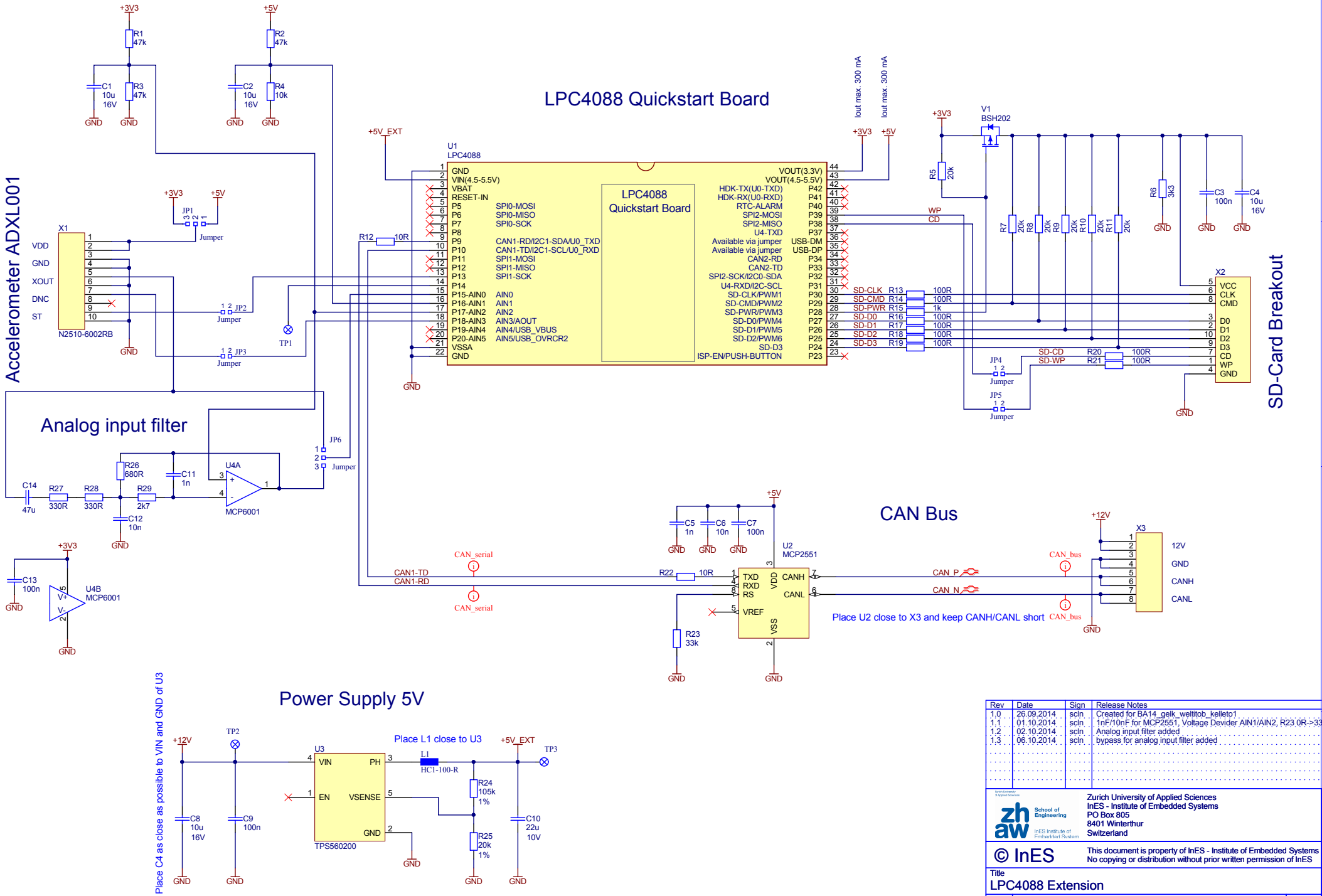

Rev	Date	Sign	Release Notes
1.0	26.09.2014	scln	Created for BA14_gelk_weltitob_kelleto1
1.1	01.10.2014	scln	1nF/10nF for MCP2551, Voltage Devider AIN1/AIN2, R23 0R->33k
1.2	02.10.2014	scln	Analog input filter added
1.3	06.10.2014	scln	bypass for analog input filter added

Zurich University of Applied Sciences
InES - Institute of Embedded Systems
PO Box 805
8401 Winterthur
Switzerland

© InES
This document is property of InES - Institute of Embedded Systems
No copying or distribution without prior written permission of InES

Title
LPC4088 Extension

Size	Document Number	Revision
A3	BA14_gelk_weltitob_kelleto1	1.3

Sheet 1 of 1 | Print date: 07.10.2014 | Drawn by: SCLN

File: D:\Altium Designer\welo_BA_board\Altium\Documents\LPC4088_Extension.SchDoc