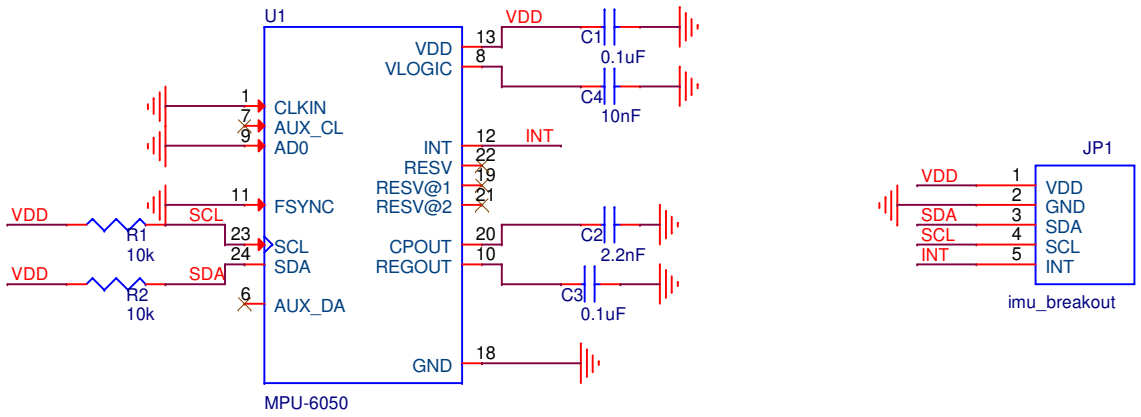

Title <Title>		
Size A	Document Number <Doc>	Rev <RevCo
Date: Monday, October 05, 2020	Sheet 1 of 1	