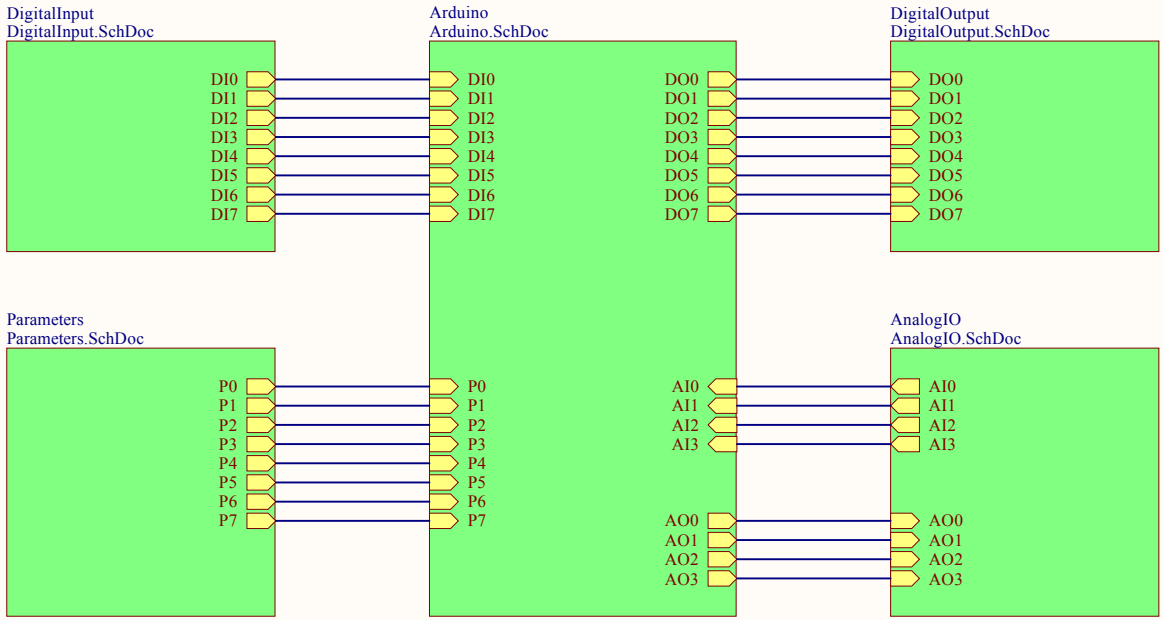

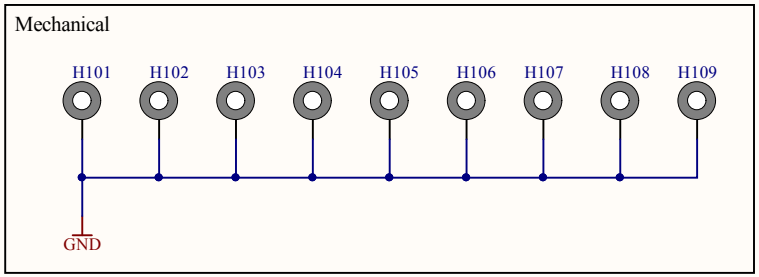

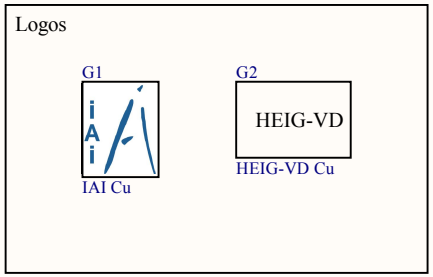

Institut d'automatisation industrielle
rte de Cheseaux 1
CH-1401 Yverdon-les-Bains
T +41(0)24 55 77 377 F +41(0)24 55 76 320
http://iai.heig-vd.ch iai@heig-vd.ch

Drawn by	MHE	2016-02-16	Project	BUTArduino	Number	439-FBG-2016-03-002
Checked by	---	---	Revision	3	Sheet	1 of 6 Size A4
Quality			File	ArduinoInterface.SchDoc		
Approved by			Title			
Processus	Name	Date	***BUT Arduino Interface***			

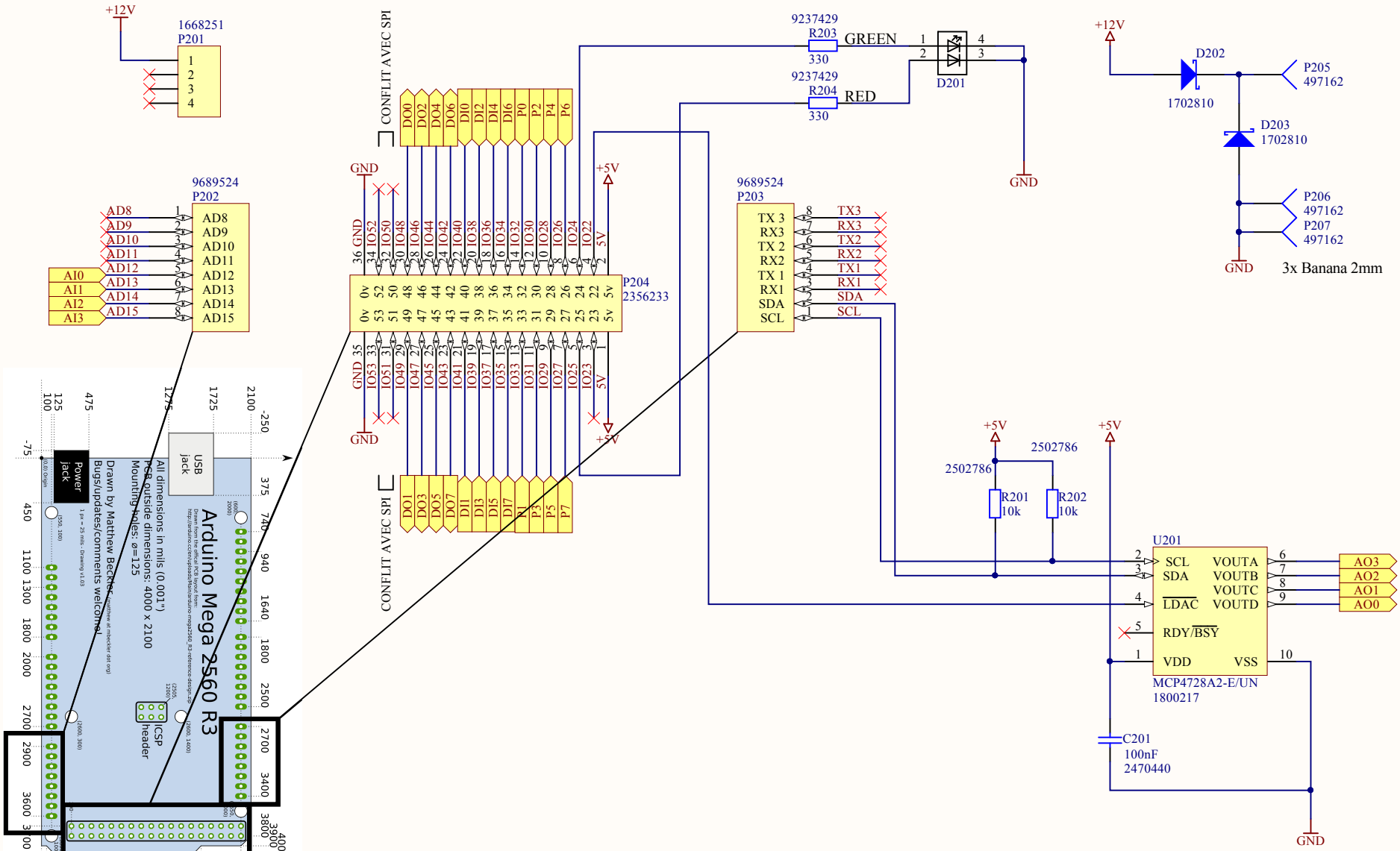

Institut d'automatisation industrielle
rte de Cheseaux 1
CH-1401 Yverdon-les-Bains
T +41(0)24 55 77 377 F +41(0)24 55 76 320
http://iai.heig-vd.ch iai@heig-vd.ch

Drawn by	MHE	2016-02-16	Project	BUTArduino	Number	439-FBG-2016-03-002
Checked by	---	---	Revision	3	Sheet	2 of 6 Size A4
Quality			File	Arduino.SchDoc		
Approved by			Title			
Processus	Name	Date	*Arduino*			

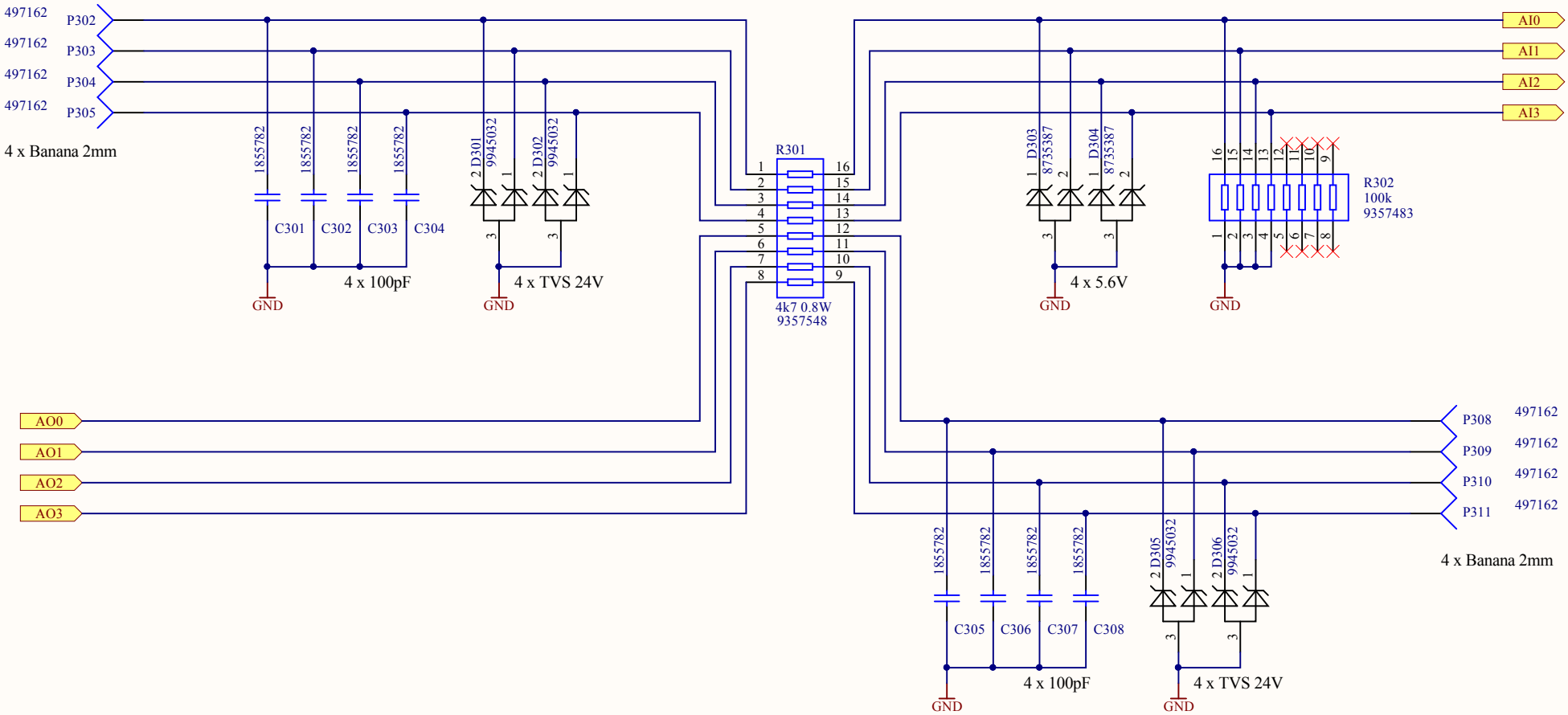

Institut d'automatisation industrielle
rte de Cheseaux 1
CH-1401 Yverdon-les-Bains
T +41(0)24 55 77 377 F +41(0)24 55 76 320
http://iai.heig-vd.ch iai@heig-vd.ch

Drawn by	MHE	2016-02-16	Project	BUTArduino	Number	439-FBG-2016-03-002
Checked by	---	---	Revision	3	Sheet	3 of 6 Size A4
Quality			File	AnalogIO.SchDoc		
Approved by			Title			
Processus	Name	Date	***Analog Input / Output***			

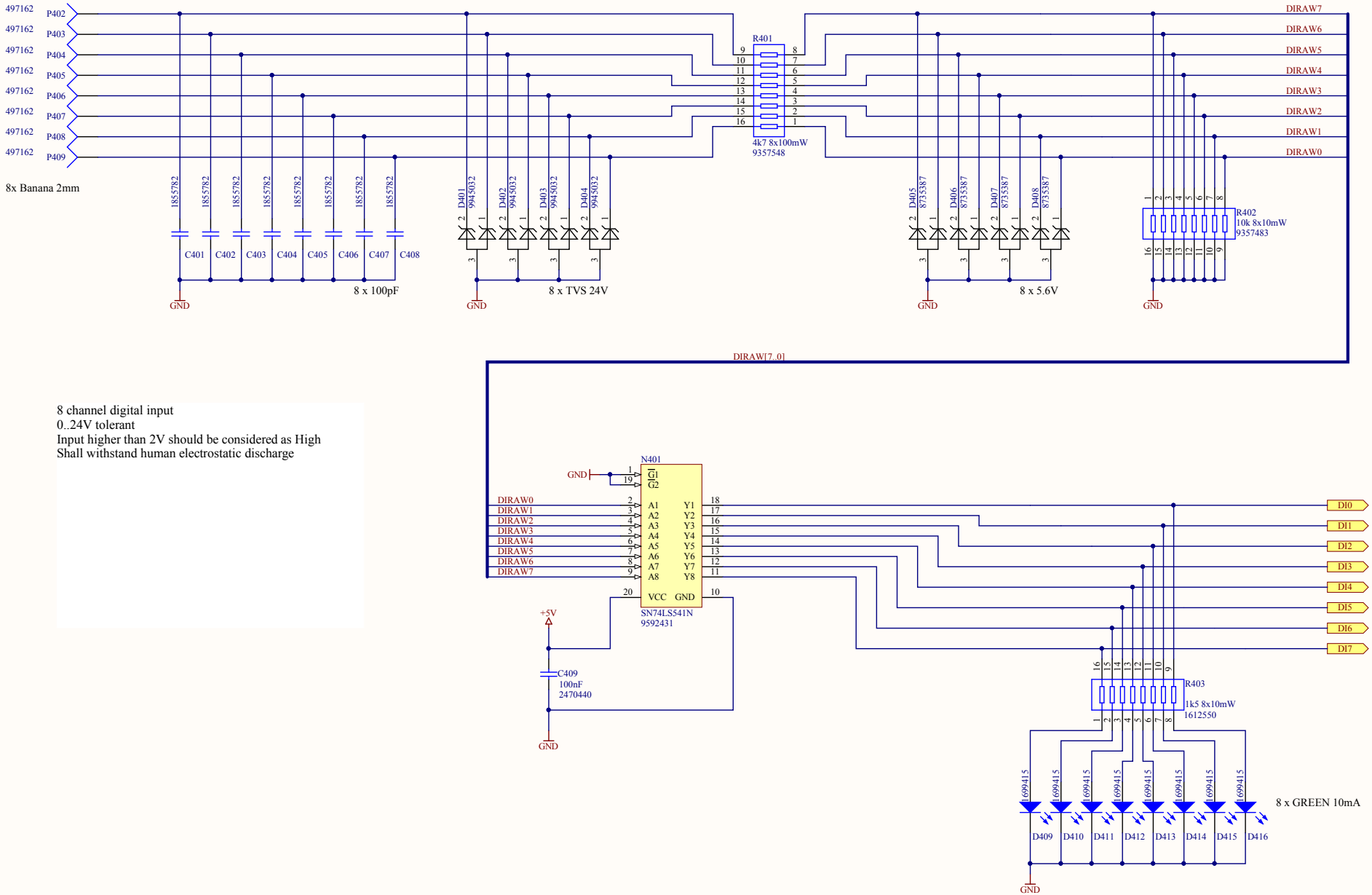

8 channel digital input
0..24V tolerant
Input higher than 2V should be considered as High
Shall withstand human electrostatic discharge

Institut d'automatisation industrielle
rte de Cheseaux 1
CH-1401 Yverdon-les-Bains
T +41(0)24 55 77 377 F +41(0)24 55 76 320
http://iai.heig-vd.ch iai@heig-vd.ch

Drawn by	MHE	2016-02-16	Project	BUTArduino	Number	439-FBG-2016-03-002
Checked by	---	---	Revision	3	Sheet	4 of 6 Size A4
Quality			File	DigitalInput.SchDoc		
Approved by			Title			
Processus	Name	Date	**Digital Input**			

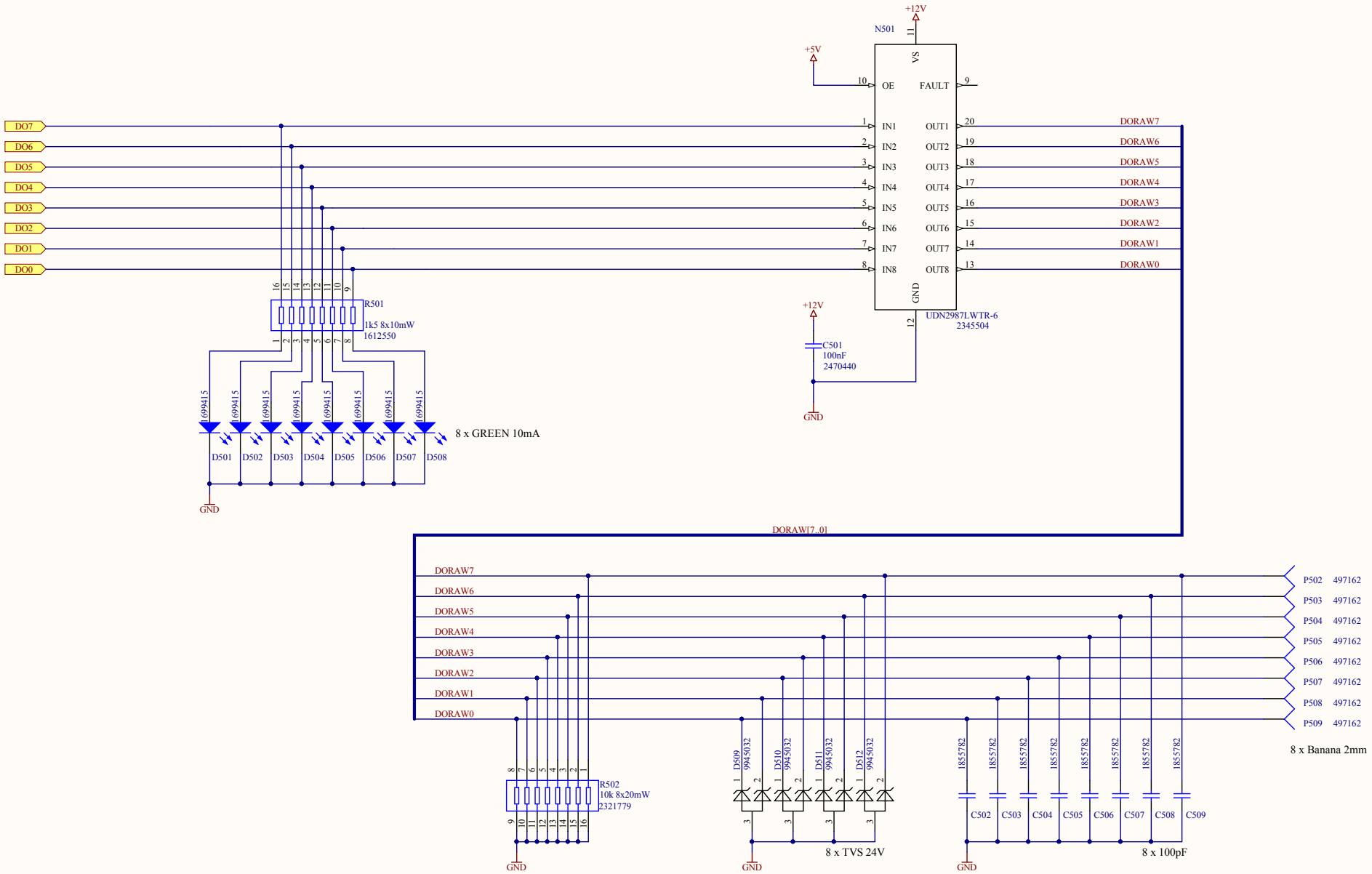

Institut d'automatisation industrielle rte de Cheseaux 1 CH-1401 Yverdon-les-Bains T +41(0)24 55 77 377 F +41(0)24 55 76 320 http://iai.heig-vd.ch iai@heig-vd.ch	Drawn by	MHE	2016-02-16	Project	BUTArduino	Number	439-FBG-2016-03-002
	Checked by	---	---	Revision	3	Sheet	5 of 6 Size A4
	Quality			File	DigitalOutput.SchDoc		
	Approved by			Title			
	Processus	Name	Date	***Digital Output***			

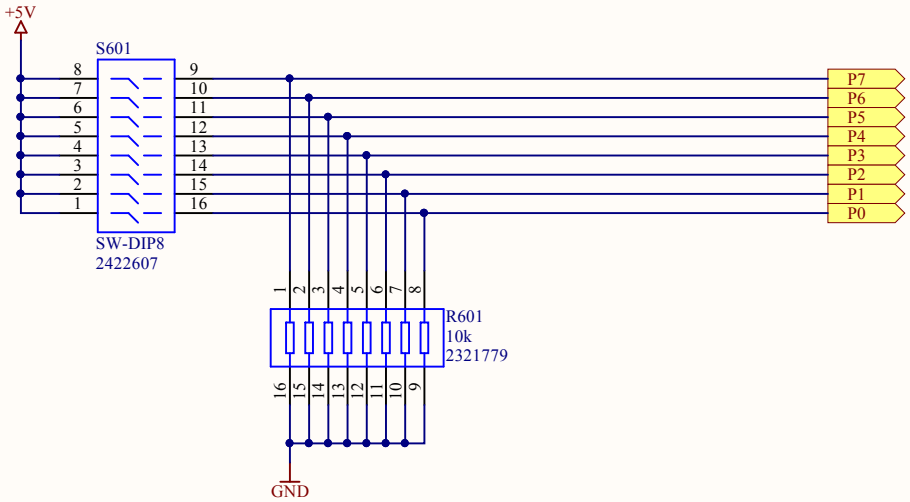

Institut d'automatisation industrielle
rte de Cheseaux 1
CH-1401 Yverdon-les-Bains
T +41(0)24 55 77 377 F +41(0)24 55 76 320
http://iai.heig-vd.ch iai@heig-vd.ch

Drawn by	MHE	2016-02-16	Project	BUTArduino	Number	439-FBG-2016-03-002
Checked by	---	---	Revision	3	Sheet	6 of 6 Size A4
Quality			File	Parameters.SchDoc		
Approved by			Title			
Processus	Name	Date	***Parameters***			

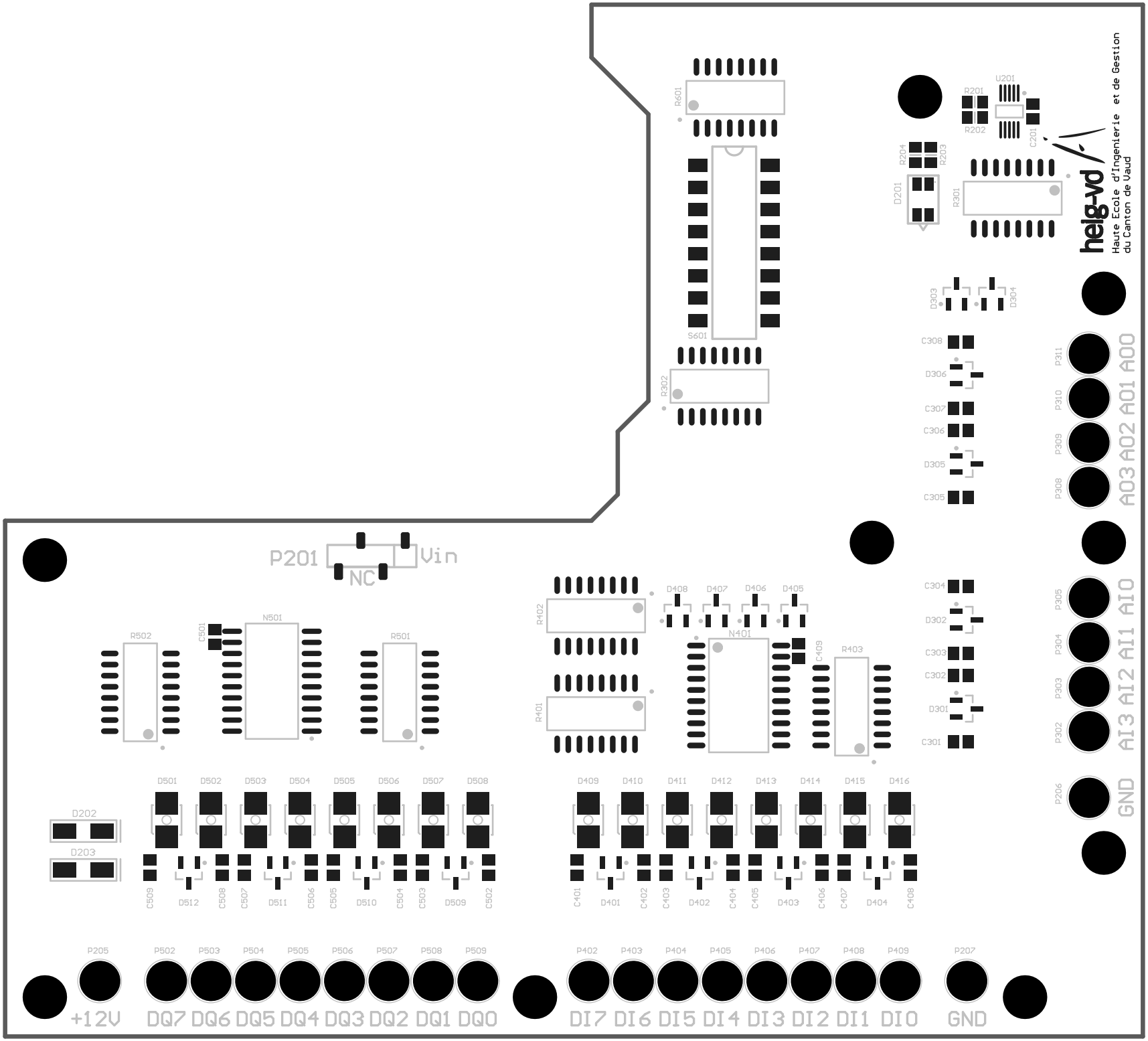
helg-vd
Haute Ecole d'Ingenierie et de Gestion
du Canton de Vaud
R601
S601
R302
U201
R201
R202
C201
R204
R203
D201
R301
D303
D304
C308
D306
C307
C306
D305
C305
P311
P310
P309
P308
A00
A01
A02
A03
P201
Vin
NC
R502
C501
N501
R501
R402
R401
D408
D407
D406
D405
N401
C409
R403
C304
D302
C303
C302
D301
C301
P305
P304
P303
P302
P206
AI0
AI1
AI2
AI3
GND
D202
D203
D501
D502
D503
D504
D505
D506
D507
D508
C509
D512
C508
C507
D511
C506
C505
D510
C504
C503
D509
C502
D409
D410
D411
D412
D413
D414
D415
D416
C401
D401
C402
C403
D402
C404
C405
D403
C406
C407
D404
C408
P205
P502
P503
P504
P505
P506
P507
P508
P509
P402
P403
P404
P405
P406
P407
P408
P409
P207
+12V
DQ7
DQ6
DQ5
DQ4
DQ3
DQ2
DQ1
DQ0
DI7
DI6
DI5
DI4
DI3
DI2
DI1
DI0
GND

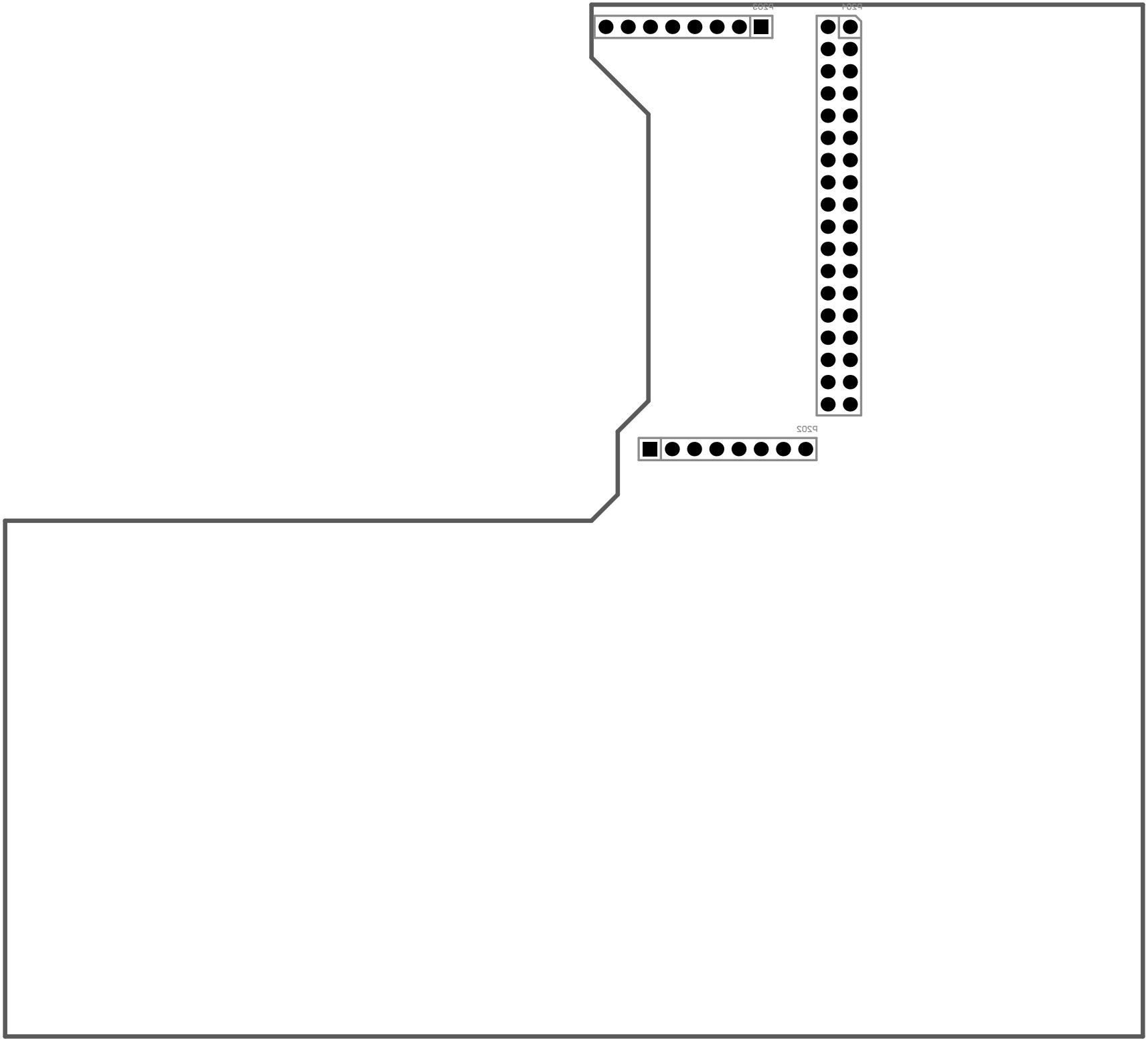
P205
P207
P202