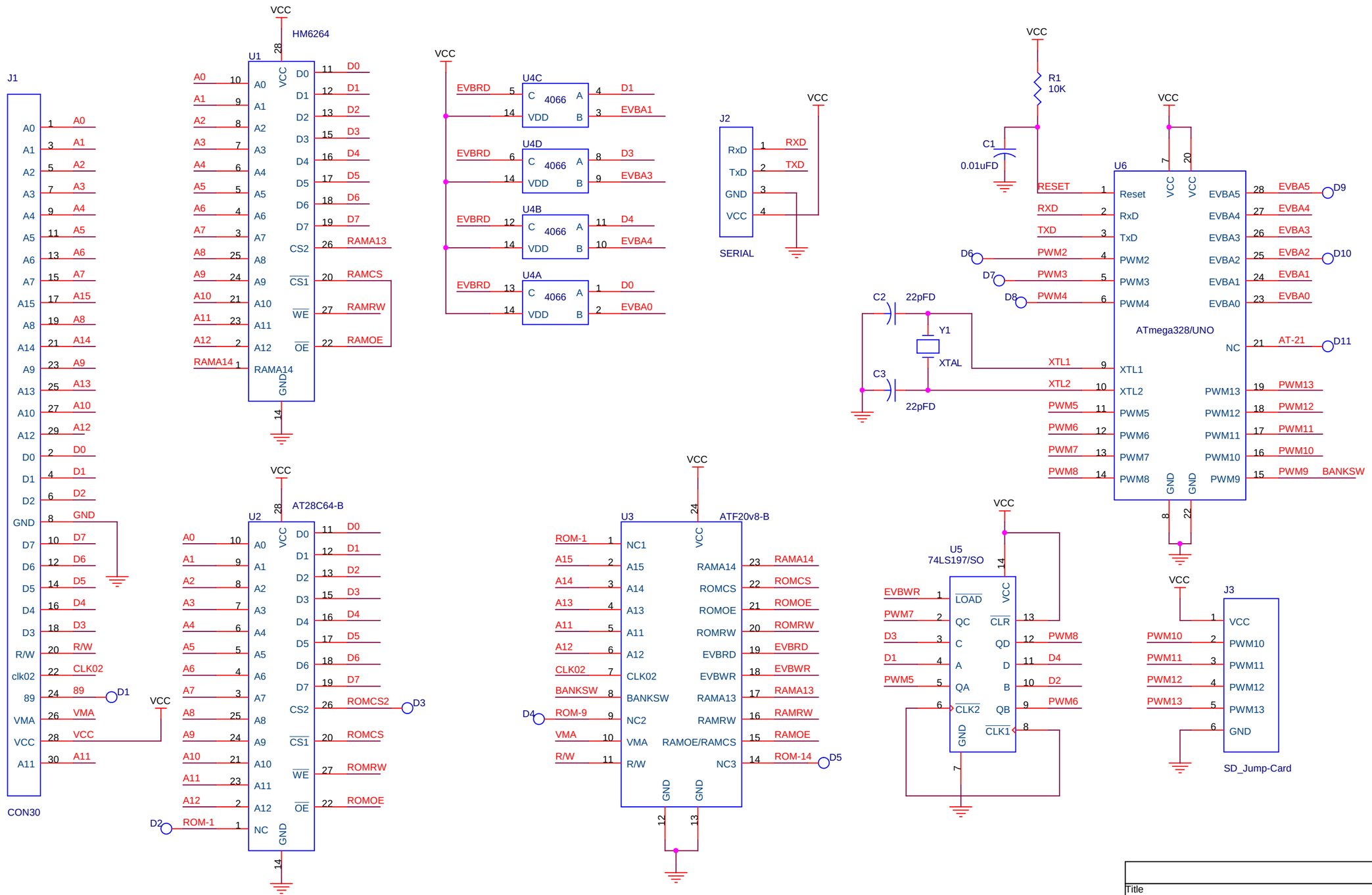

Title
GAME BOARD

Size	Document Number	Rev
B	2013_09_25	NC

Date: Wednesday, September 25, 2013 Sheet 1 of 1