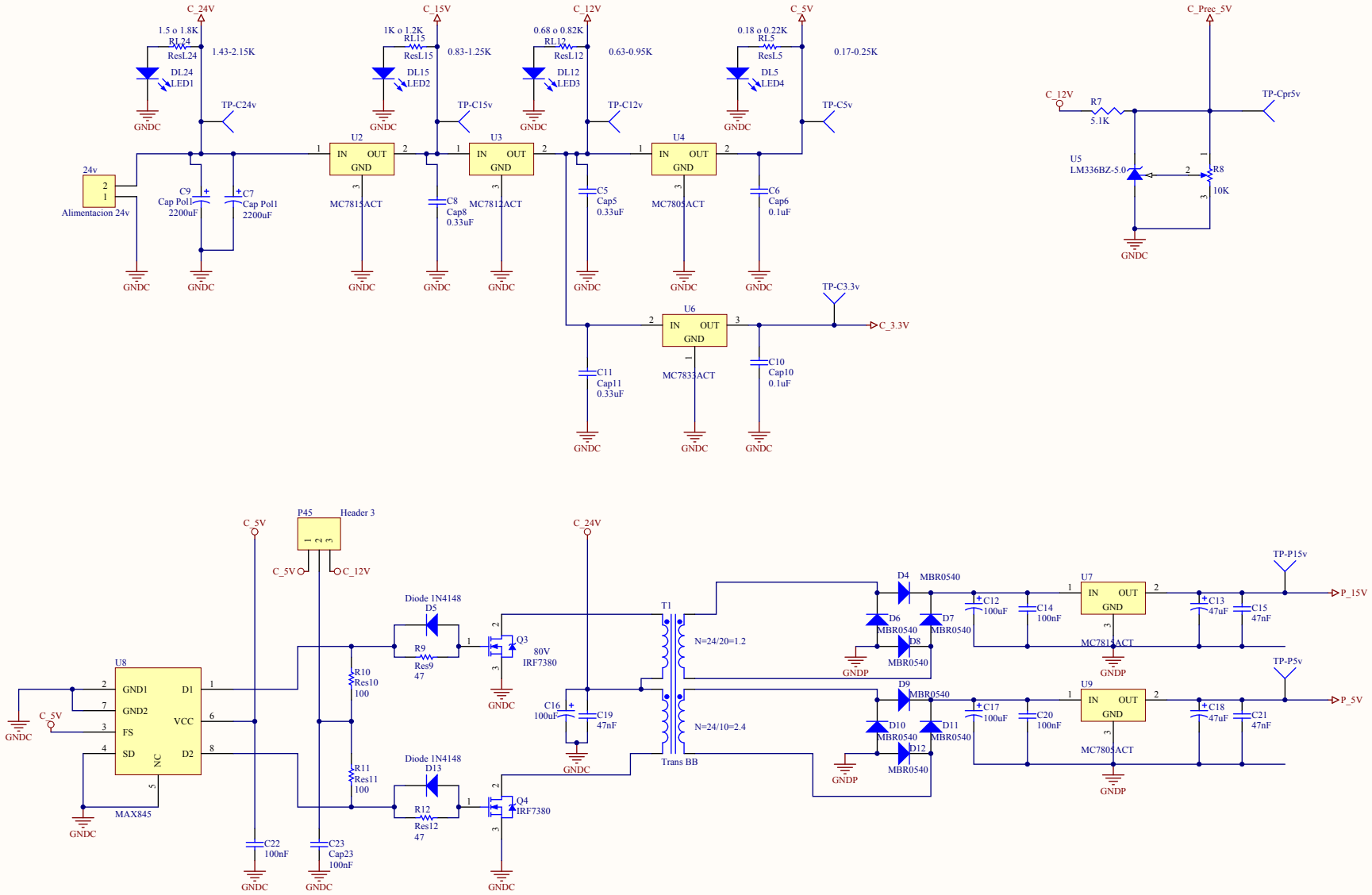

Title		
Size A3	Number	Revision
Date: 29/11/2011	Sheet of	
File: D:\Tp final - Emanuel Caravelli - Gonzalo Iberra\Fuentes 15V_5V_3.3V.SchDoc	Drawn By:	