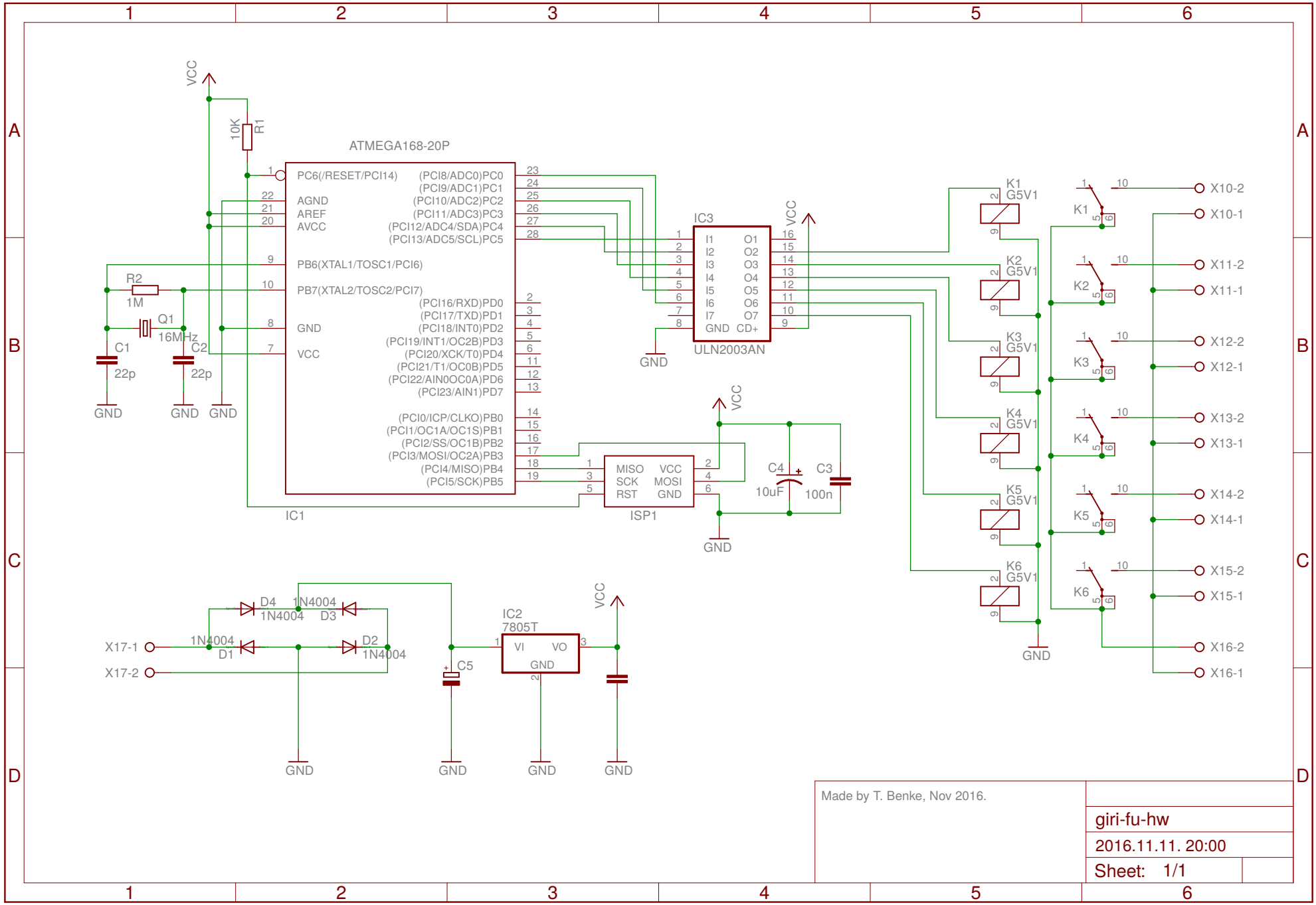

2016.11.12. 7:39 /home/tombenke/topics/giri/giri-fu-hw/src/giri-fu-hw.sch (Sheet: 1/1)