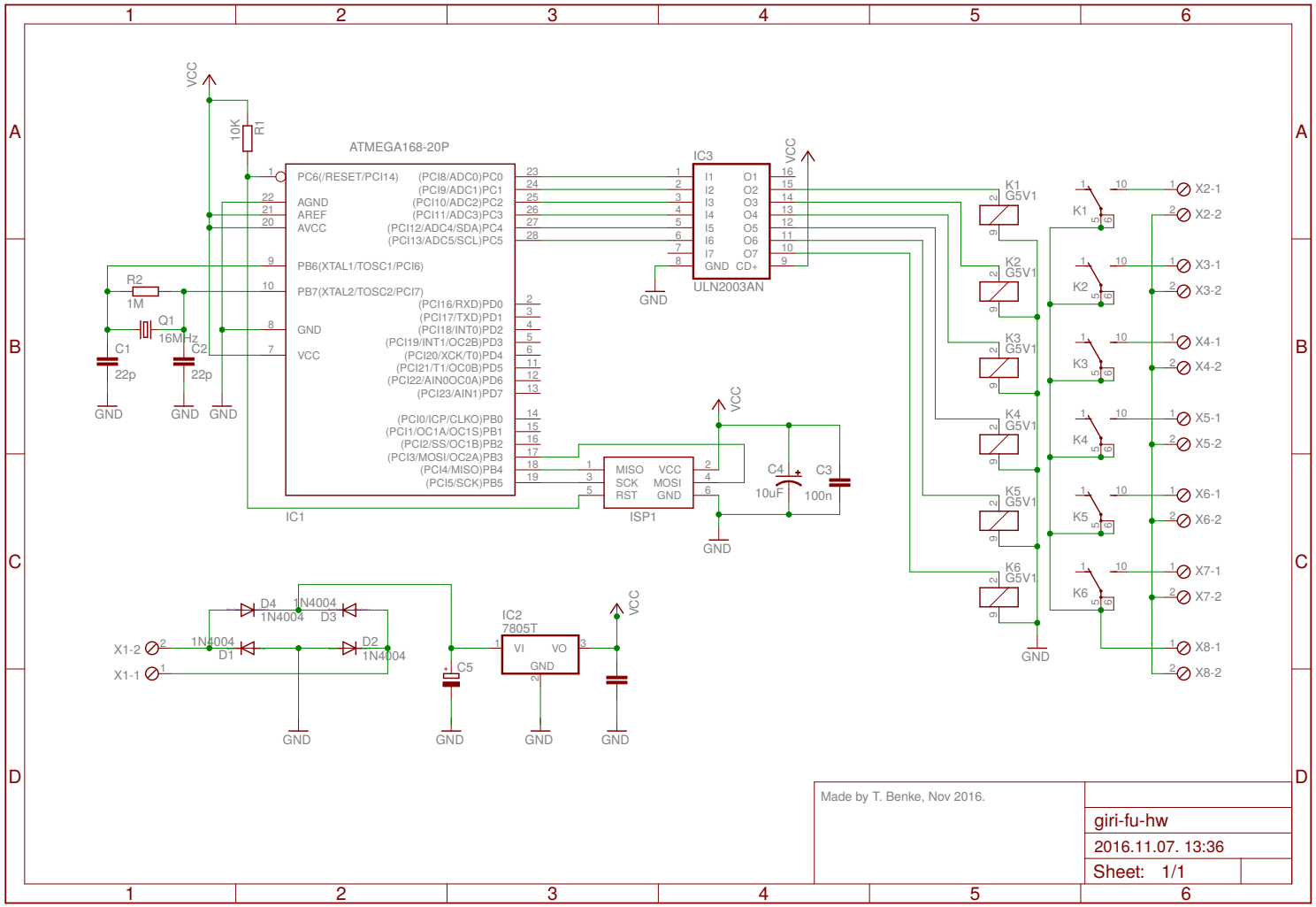

2016.11.07. 13:37 f=0.75 /home/tombenke/topics/giri/giri-fu-hw/src/giri-fu-hw.sch (Sheet: 1/1)