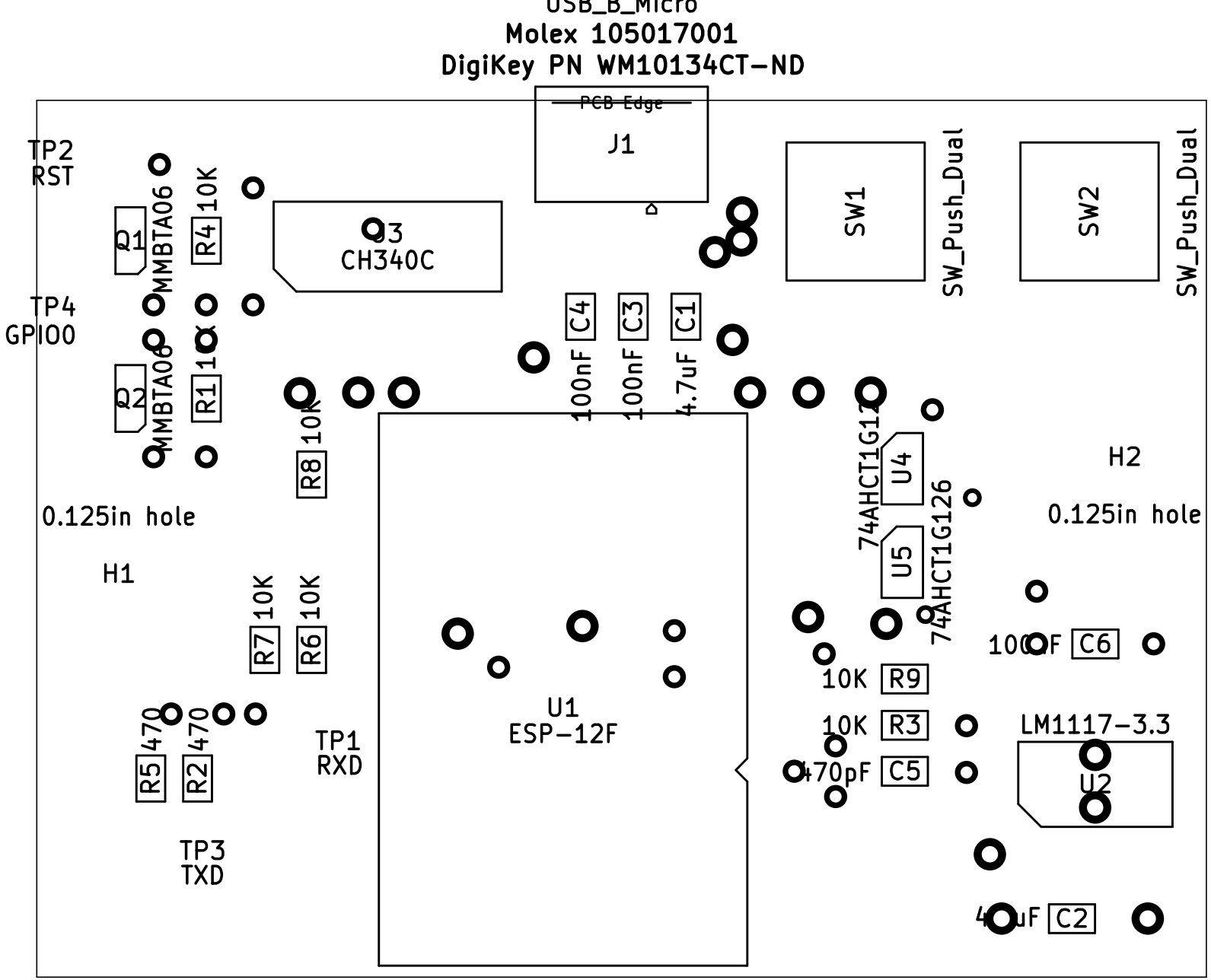
USB_B_Micro
Molex 105017001
DigiKey PN WM10134CT-ND
PCB Edge
J1
TP2
RST
Q1
MMBTA06
R4
10K
Q3
CH340C
SW1
SW_Push_Dual
SW2
SW_Push_Dual
TP4
GPIO0
Q2
MMBTA06
R1
10K
C4
100nF
C3
100nF
C1
4.7uF
R8
10K
74AHCT1G126
U4
74AHCT1G126
U5
H2
0.125in hole
0.125in hole
H1
R7
10K
R6
10K
U1
ESP-12F
10K
R9
100uF
C6
10K
R3
LM1117-3.3
470pF
C5
U2
R5
470
R2
470
TP1
RXD
TP3
TXD
4uF
C2