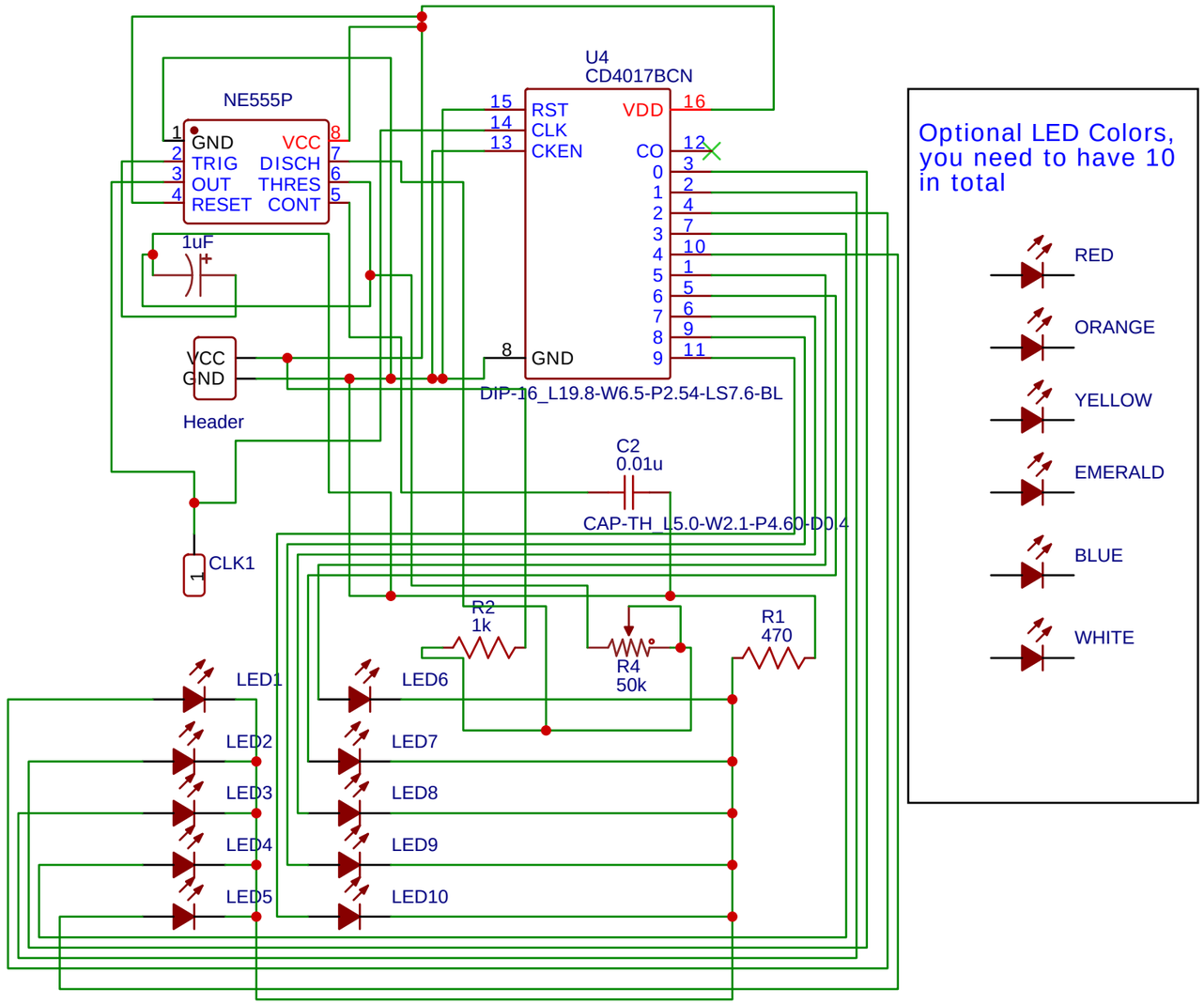

Optional LED Colors, you need to have 10 in total

TITLE: Sheet_1		REV: 1.0
EasyEDA	Company: Your Company	Sheet: 1/1
	Date: 2025-02-25 Drawn By: johncohnvt	