A-SAFE

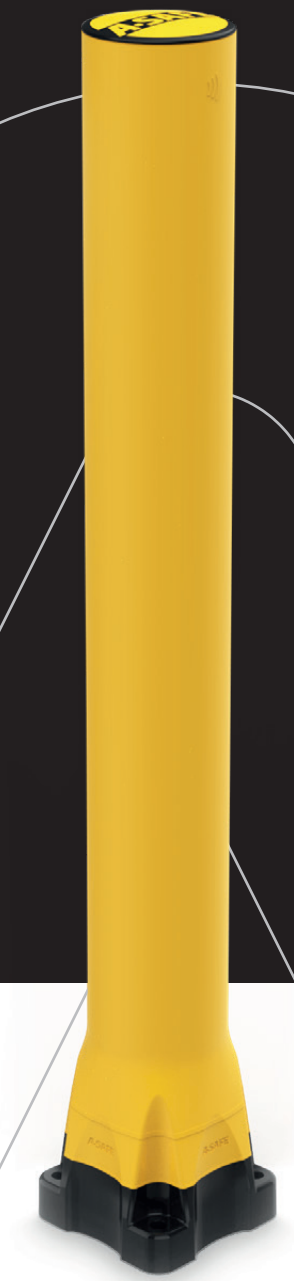

Monoplex Bollard 130

PRH-1074-A-SAFE-13022024-1

Production

Dimensions (mm/inches)

- A 170 / 6 1/16
- B 170 / 6 1/16
- C 14 / 9/16
- D 1135 (44 11/16)
- E 130 / 5 1/8

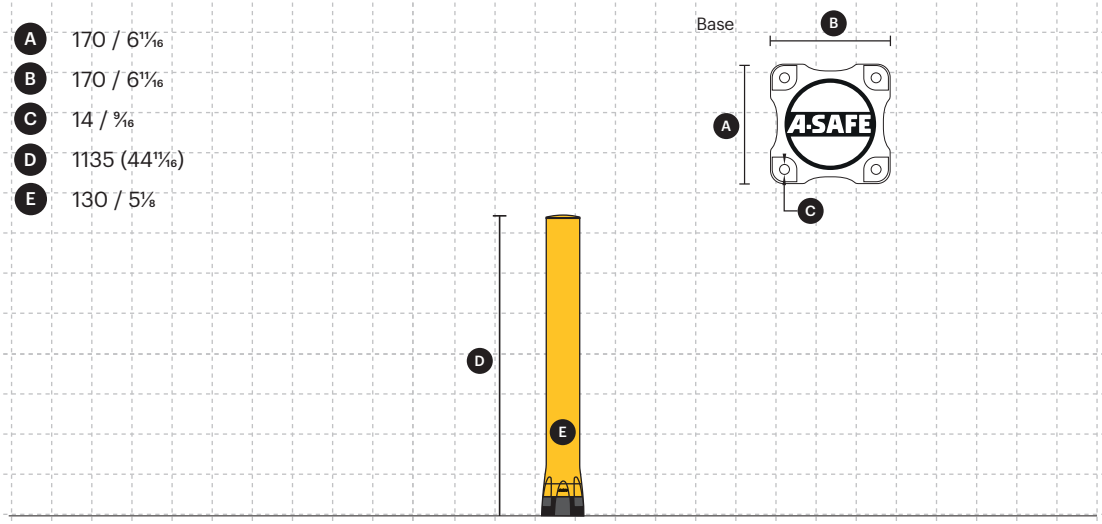

Colour Combinations

Standard

Standard Yellow
RAL 1007*
PANTONE 7548*

Standard Black
RAL 9005*
PANTONE Black

*Please note that the RAL and PANTONE colours listed are the closest match to standard A-SAFE colours, but may not be exact matches of the actual product colour and should be used for guidance only.

Product Material

MONOPLEX™

Monoplex material redefines the standard for polymer impact protection. Precision-engineered in the UK using state-of-the-art materials and manufacturing technologies, the new material offers new levels of versatility and durability, as well as unrivalled performance across multiple impacts.

Layered engineering - Allows multiple hardness of Monoplex material to be layered to provide flexibility, recovery & impact resistance.

Recovery - Re-positions to natural positions following impact (time-scale dependent on impact force).

Increased performance rating - Products can withstand higher impacts from industrial vehicles.

Eliminates failure points - Removal of steel base plates eliminates historic failure point.

Repeat impacts - Material properties allow for repeat impacts at higher weights and speeds.

Fixings

12mm Concrete Screw, Resin, G-Form Washer

Weight of product

Bollard	
130 / 5 1/8	9.22 Kg / 20.32 lbs

Minimum order quantities

Not applicable.

Suitability

Environment

Internal use only

ATEX Suitability

Not suitable in an explosive atmosphere

Standard Base and Fixing

Monoplex Material

12mm Concrete Screw
Resin, G-Form Washer

Vehicle Suitability

Pedestrians	Electric Pedestrian Stacker	Manual Pallet Truck	Electric Reach Truck	Lightweight Counterbalance FLT	Horizontal Order Picker

Fit for purpose application

Building and equipment protection	Column protection	Corridor and wall protection

Impact Zone
0 - 1125mm
(0 - 44⅔ inches)

Material Properties	MONOPLEX™
Temperature Range	10°C to 30°C
Ignition Temperature	>200°C
Toxicity	Not Hazardous
Static Rating (Surface Resistivity)	10^{11} - 10^{14} Ω
Hygiene Seals	No

Fire information

A-SAFE Monoplex Bollards are manufactured and offers the highest levels of flexibility and resilience without compromising on fire safety.

Monoplex has an ignition temperature of 200º Celsius which is significantly higher than materials such as wooden pallets or polymers such as flexible PVC. This means that for combustion of an A-SAFE Monoplex Bollard to occur, a facility fire would need to be both large and well advanced, by which time any personnel would have already been evacuated to safety.

Recycling Information

Packaging	Bollard	Fixings
Mixed Recycled	7	Zinc Plated Steel

*Fixings

Fixing Type	Item No.	Description	Nom. Drill Hole (W)	Min. Drill Depth	Quantity
Standard	B-02-01-0061	Concrete Screw 12 x 130 Hex Head	12mm / ½”	130mm / 5⅛”	4 per Bollard
Washer	B-02-02-0068	M12 Form G Washer z/p			4 per Bollard

Ground Works

Before you install A-SAFE barrier we advise a site survey of the ground intended for the product. This information is crucial as the ground conditions can vastly affect the performance of the safety barrier.

We should always request to see the Operations and Maintenance Manual (OMM) for the building we are installing barrier. This document will give key information such as -

- Depth of concrete slab installed
- Areas where rebar is being used
- Areas where services are located in the building
- Operating temperatures of the facility

If an OMM is not available, we should request to produce an on-site pull-out test. The pull-out test gives us all the information we need to evaluate if an install is possible.

For more information please refer to the Ground Works document in the Product Hub on the A-SAFE SharePoint.

Concrete Pad

130mm OD Post
12mm Concrete Screw

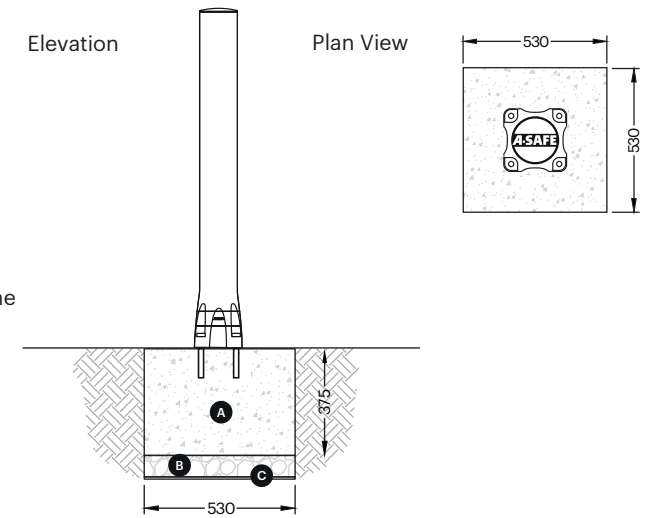

- A Concrete Pad
- B Hardcore
- C Damp Proof Membrane

Dimensions of the concrete pad shown are a minimum size only.

***IMPORTANT.** The fixings data detailed above are based on A-SAFE supplied fixings. If a customer uses their own fixings, they must refer to specific install instructions.

Part Codes

1. MP-01-01-0001 - Monoplex Bollard - 130mm OD, Y/Y/B

2. M-01-01-0001 - 130 Cap, BLK-YEL (G)

3. B-02-01-0061 - Concrete Screw 12 x 130 Hex Head x4 No.
   B-02-02-0068 - M12 Form G Washer z/p x4 No.

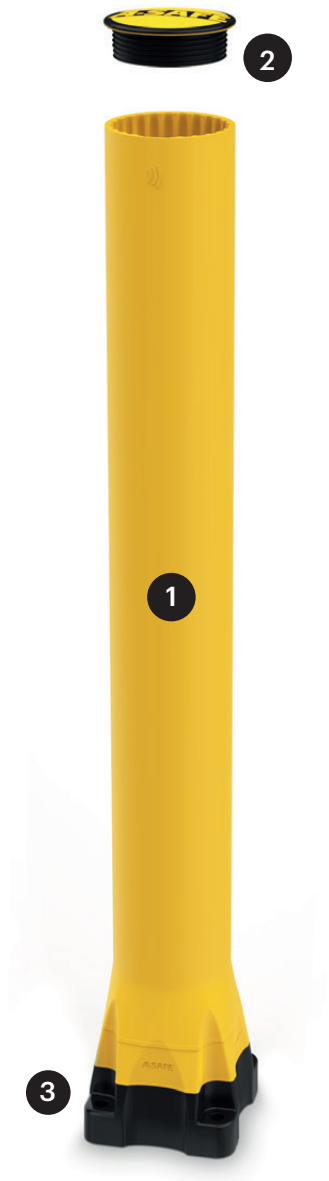

Data Sheets

Install Documents

Certificates

If you have any questions please contact
the product management team at A-SAFE HQ
Product.Management@asafe.com

A-SAFE
PIONEERING WORKPLACE SAFETY

PRODUCTHUB

Document Reference	PRH-1074-A-SAFE-13022024-1
Document Description	Monoplex Bollard 130
Date Created	February 2024
Author/s	Matthew Briggs
Checked by	Alex Dougherty / Jerry Budby
Approved by	Ben Allen
Revision	Version 1 - February 2024