A-SAFE

Truck Stop

PRH-1082-A-SAFE-10052024-1

Production

Dimensions (mm/inches)

- A 300 / 12
- B 1000 / 39⅜
- C 160 / 6 5/16
- D 200 / 7⅞
- E 160 / 6 5/16

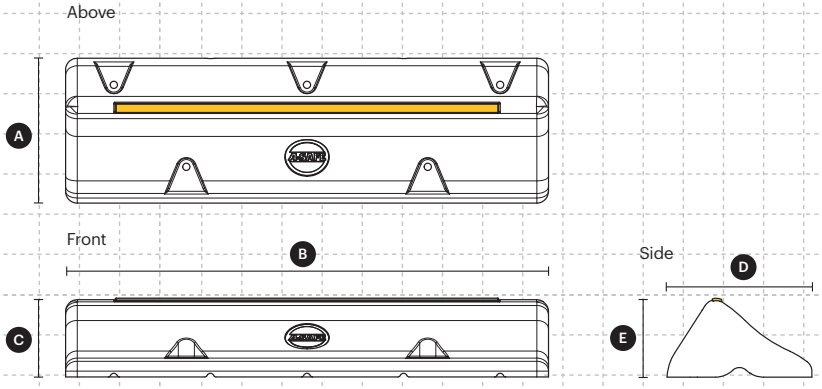

Colour Combinations

Standard Black
RAL 9005*
PANTONE Black

Standard Yellow
RAL 1007*
PANTONE 7548*

*Please note that the RAL and PANTONE colours listed are the closest match to standard A-SAFE colours, but may not be exact matches of the actual product colour and should be used for guidance only.

Product Material

This item is purchased from a third party and therefore, product composition details are not readily available.

Fixings

Concrete Bolt 12 x 130 Hex Head

Weight of product

Truck Stop
22 Kg / 48 lbs

Minimum order quantities

Not applicable on this product

Suitability

Environment

External use only

ATEX Suitability

Not suitable in an explosive atmosphere

Standard Base and Fixing

Concrete Bolt 12 x 130 Hex Head

Material Properties

This item is purchased from a third party and therefore, product composition details are not readily available.

Vehicle Suitability

Heavy Goods Lorry	Small Lorry

Fit for purpose application

Service yard and dock protection	Building and equipment protection

Impact Zone
0 - 160mm
(0 - 6 5/16")

*Fixings

Item No.	Description	Nom. Drill Hole (W)	Min. Drill Depth	Wrench Size	Torque Setting	Qty per Pack
B-02-01-0061	Concrete Bolt 12 x 130 Hex Head	12mm / ½"	130mm / 5⅛"	16mm / ⅝"AF	950Nm (Impact Wrench)	5 per Truck Stop

Ground Works

Before you install A-SAFE barrier we advise a site survey of the ground intended for the product. This information is crucial as the ground conditions can vastly affect the performance of the safety barrier.

We should always request to see the Operations and Maintenance Manual (OMM) for the building we are installing barrier. This document will give key information such as -

- Depth of concrete slab installed
- Areas where rebar is being used
- Areas where services are located in the building
- Operating temperatures of the facility

If an OMM is not available, we should request to produce an on-site pull-out test. The pull-out test gives us all the information we need to evaluate if an install is possible.

For more information please refer to the Ground Works document in the Product Hub on the A-SAFE SharePoint.

Concrete Pad

Concrete Bolt
12 x 130 Hex Head

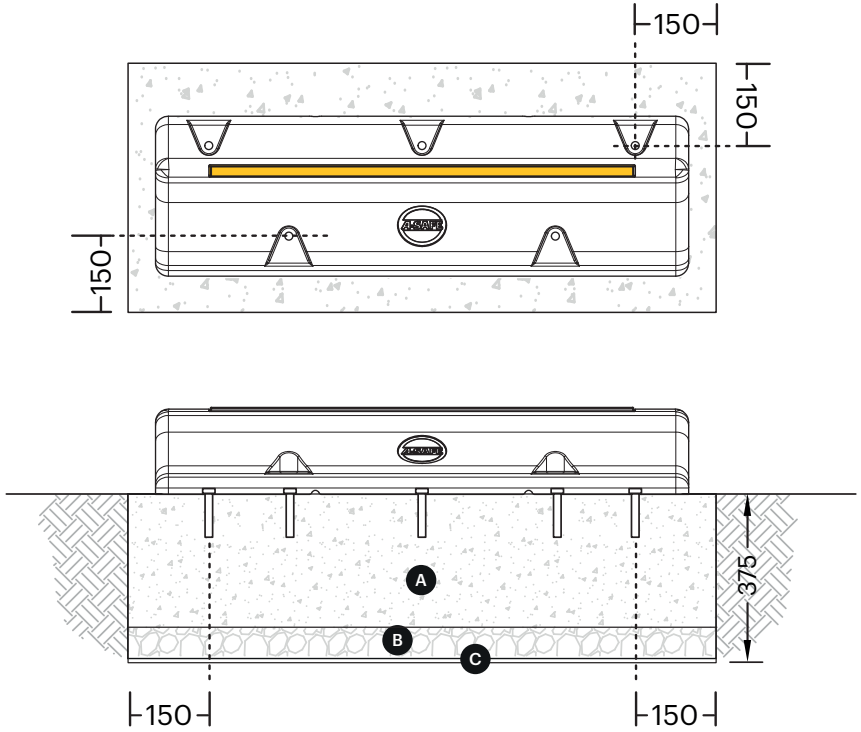

- A Concrete Pad
- B Hardcore
- C Damp Proof Membrane

Dimensions of the concrete pad shown are a minimum size only.

***IMPORTANT.** The fixings data detailed above are based on A-SAFE supplied fixings. If a customer uses their own fixings, they must refer to specific install instructions.

Part Codes

1. B-04-01-0089
2. B-02-01-0061 - Fixing Bolts

Data Sheets

Testing Videos

CAD

Install Documents

Certificates

If you have any questions please contact
the product management team at A-SAFE HQ
Product.Management@asafe.com

A-SAFE
PIONEERING WORKPLACE SAFETY

PRODUCTHUB

Document Reference	PRH-1082-A-SAFE-10052024-1
Document Description	Truck Stop
Date Created	May 2024
Author/s	Matthew Briggs
Checked by	Jerry Budby
Approved by	Ben Allen
Revision	Version 1 - May 2024