A-SAFE

Cold Storage RackGuard

PRH-1065-A-SAFE-14122023-2

Production

Compression hinges have various widths to fit a range of racking profiles.

RackGuard (S) SL, ML, LL

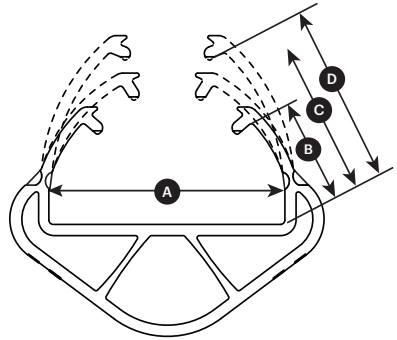

Dimensions (mm/inches)

- A 103 / 4
- B 45 / 1¾
- C 68 / 2¾
- D 80 / 3⅛

RackGuard (S) SLR, MLR, LLR

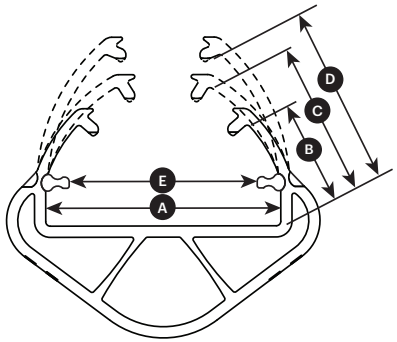

Dimensions (mm/inches)

- A 103 / 4
- B 45 / 1¾
- C 68 / 2¾
- D 80 / 3⅛
- E 85 / 3¾ (Ref.)

RackGuard (L) SL

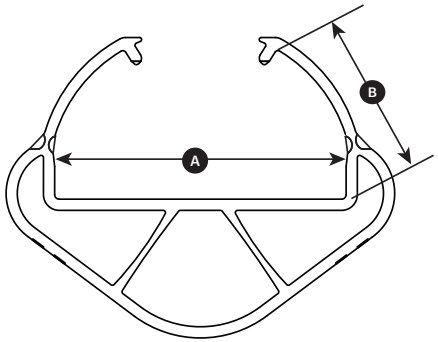

Dimensions (mm/inches)

- A 130 / 5⅛
- B 75 / 3

RackGuard (L) SLR

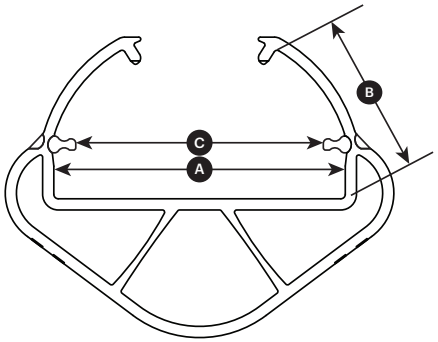

Dimensions (mm/inches)

- A 130 / 5⅛
- B 75 / 3
- ● 112 / 4⅜ (Ref.)

Racking Profiles

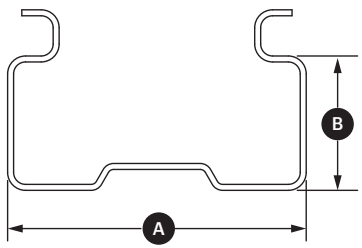

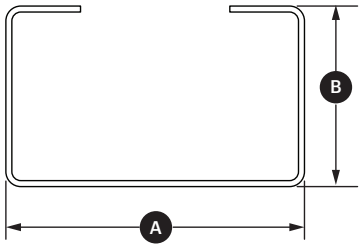

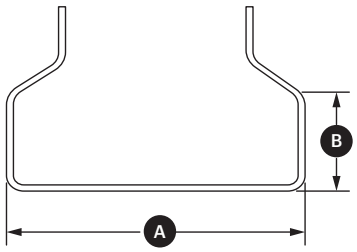

RackGuard Sizes

Description	A-Rack width (max)	B-Rack depth (max)
RackGuard (S) SL	103 / 4	45 / 1¾
RackGuard (S) ML	103 / 4	68 / 2¾
RackGuard (S) LL	103 / 4	80 / 3⅛
RackGuard (S) SLR	85 / 3¾	45 / 1¾
RackGuard (S) MLR	85 / 3¾	68 / 2¾
RackGuard (S) LLR	85 / 3¾	80 / 3⅛
RackGuard (L) SL	130 / 5⅛	75 / 3
RackGuard (L) SLR	112 / 4⅜	75 / 3

All RackGuards are available in 400mm (15¾") and 600mm (23⅝") heights.

Part Codes

RACKGUARD - (COLD STORAGE VERSION)				
Part No.	Body Type	Height	Wing	Body + Stripe Colour
P-03-02-0001(-**)	S-SL	400mm		Yellow + Blue
P-03-02-0002	S-SL	400mm	Wing	Yellow + Blue
P-03-02-0005(-**)	S-ML	400mm		Yellow + Blue
P-03-02-0006	S-ML	400mm	Wing	Yellow + Blue
P-03-02-0009	S-LL	400mm		Yellow + Blue
P-03-02-0010	S-LL	400mm	Wing	Yellow + Blue
P-03-02-0013(-**)	L-SL	400mm		Yellow + Blue
P-03-02-0014	L-SL	400mm	Wing	Yellow + Blue
P-03-02-0017(-**)	S-SL	600mm		Yellow + Blue
P-03-02-0018(-**)	S-SL	600mm	Wing	Yellow + Blue
P-03-02-0021(-**)	S-ML	600mm		Yellow + Blue
P-03-02-0022(-**)	S-ML	600mm	Wing	Yellow + Blue
P-03-02-0025	S-LL	600mm		Yellow + Blue
P-03-02-0026(-**)	S-LL	600mm	Wing	Yellow + Blue
P-03-02-0029(-**)	L-SL	600mm		Yellow + Blue
P-03-02-0030(-**)	L-SL	600mm	Wing	Yellow + Blue

RACKGUARD - (COLD STORAGE VERSION)				
Part No.	Body Type	Height	Wing	Body + Stripe Colour
P-03-02-0049	S-SL	400mm		Yellow + Blue
P-03-02-0050	S-SL	400mm	Wing	Yellow + Blue
P-03-02-0053	S-ML	400mm		Yellow + Blue
P-03-02-0054	S-ML	400mm	Wing	Yellow + Blue
P-03-02-0057	S-LL	400mm		Yellow + Blue
P-03-02-0058	S-LL	400mm	Wing	Yellow + Blue
P-03-02-0061	L-SL	400mm		Yellow + Blue
P-03-02-0062	L-SL	400mm	Wing	Yellow + Blue
P-03-02-0065	S-SL	600mm		Yellow + Blue
P-03-02-0066	S-SL	600mm	Wing	Yellow + Blue
P-03-02-0069	S-ML	600mm		Yellow + Blue
P-03-02-0070	S-ML	600mm	Wing	Yellow + Blue
P-03-02-0073	S-LL	600mm		Yellow + Blue
P-03-02-0074	S-LL	600mm	Wing	Yellow + Blue
P-03-02-0077	L-SL	600mm		Yellow + Blue
P-03-02-0078	L-SL	600mm	Wing	Yellow + Blue

Suitability

Environment

Internal use only

ATEX Suitability

Not suitable in an explosive atmosphere

Vehicle Suitability

Lightweight Counterbalance FLT	Electric Reach Truck	Electric Pedestrian Truck	Engine Counterbalance Heavy Duty Forklift Truck	High Rack Stacker	Horizontal Order Picker

Fit for purpose application

Cold Storage Suitable to -30°C	Racking and storage protection

Impact Zone
400 & 600mm versions available

Material Properties	MEMAPLEX™ SUB-ZERO
Temperature Range	-30°C to 0°C
Ignition Temperature	370°C to 390°C
Flash Point	350°C to 370°C
Toxicity	Not Hazardous
Chemical Resistance	Excellent - ISO/TR 10358
Weathering Stability (Grey Scale)	5/5*
Light Stability (Blue Wool Scale)	7/8**
Static Rating (Surface Resistivity)	10^{15} - 10^{16} Ω
Hygiene Seals	No

* Weathering scale 1 is very poor and 5 is excellent ** Light stability scale 1 is very poor and 8 is excellent

Fire information

Manufactured from polypropylene. Polypropylene has an ignition temperature of 370º Celsius which is significantly higher than materials such as wooden pallets or polymers such as flexible PVC. This means that for combustion of an A-SAFE barrier to occur, a facility fire would need to be both large and well advanced, by which time any personnel would have already been evacuated to safety.

Polymer has been engineered to remain stable up to a temperature of 350º Celsius. In contrast, PVC starts breaking down at between 249º Celsius and 273º Celsius, and materials such as wood will burn instantly.

Our material has been specially developed to minimise the release of smoke during combustion. Furthermore, unlike environmentally hazardous polymers like PVC, it does not release harmful dioxins, hydrogen cyanide or hydrogen chloride when burnt.

Environmental information

Research conducted by a leading plastic solutions company* showed that producing one metric tonne of polymer generates less carbon emissions than producing a tonne of steel**. Therefore, from the very outset of raw material production, polymer provides a significant CO_2 saving over steel.

For more information visit A-SAFE.com

* http://www.borealisgroup.com ** www.liloontheweb.org.uk/handbook/carbonfootprint

Recycling Information	
Packaging	RackGuard
Mixed Recycled	5

Dual Branded RackGuard

Personalisation is available on all RackGuard variants allowing customers to create a unified branding experience throughout their warehouse facility.

The customers identity would always be placed above the A-SAFE RackGuard branding (see illustration opposite) and is etched onto the product in a single colour black. Customers need to be made aware that print limitations can mean an identity may need to be altered to accomodate the production process. Approval of any changes are detailed through a customer approval process. Please note that the A-SAFE branding will always appear on the product and cannot be removed.

A minumum order quantity needs to be applied to any dual branded RackGuard. The options when quoting are detailed below.

Minimum order quantity options
1,000 units of any variant of RackGuard
Alternatively a line set-up charge of; GBP 1,000.00 EUR 1,275.00 USD 1,650.00 AUD 2,600.00 JPY 180,000.00
After the initial minimum order requirements have been met, no further charges will be applicable.

Dual Branded RackGuard Process

The process below has been produced to aid the production process of Dual Branded RackGuards.

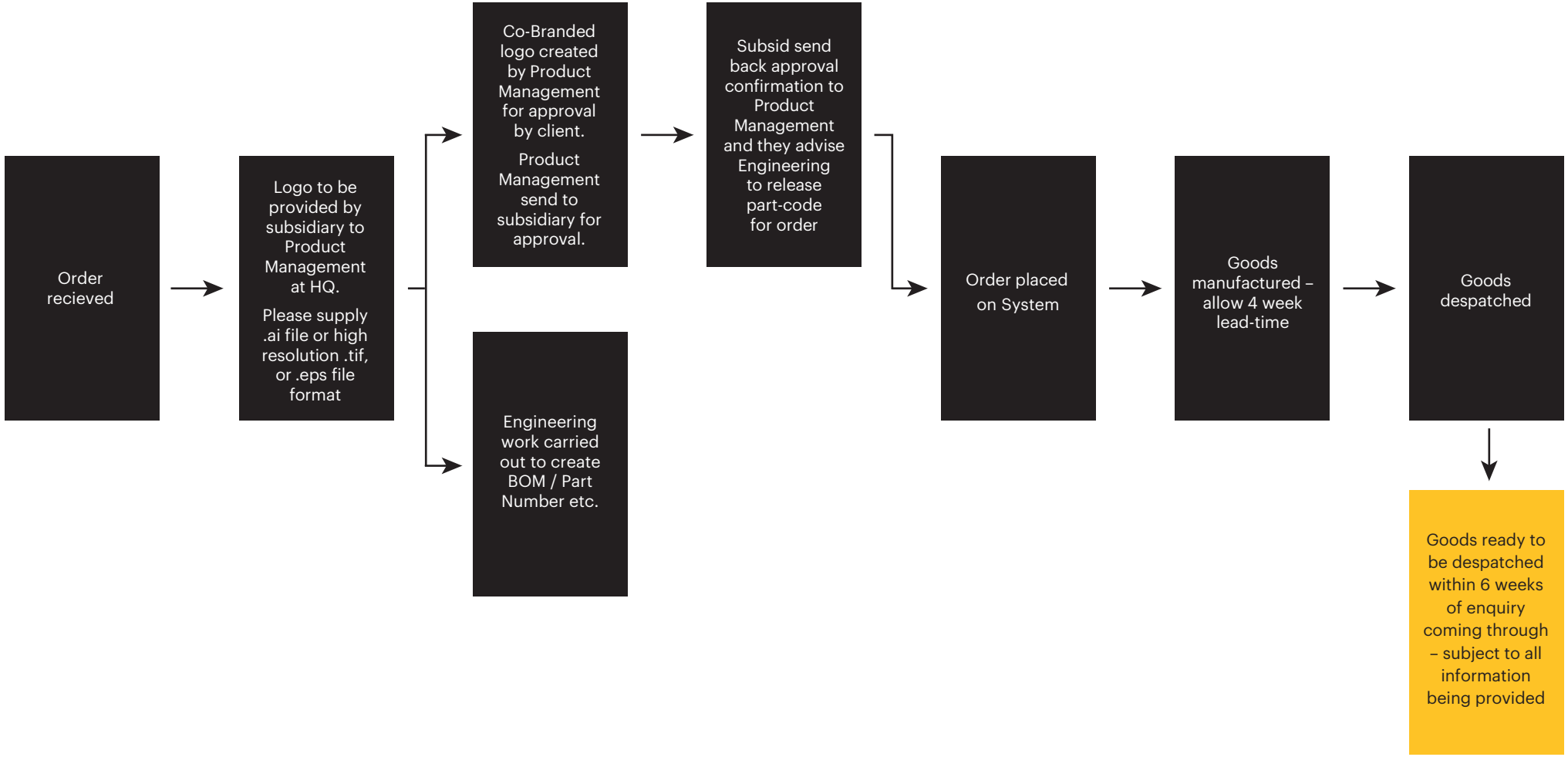

Data Sheets

Testing Videos

CAD

Install Documents

Certificates

If you have any questions please contact
the product management team at A-SAFE HQ
Product.Management@asafe.com

A-SAFE
PIONEERING WORKPLACE SAFETY

PRODUCTHUB

Document Reference	PRH-1065-A-SAFE-14122023-2
Document Description	Cold Storage RackGuard
Date Created	December 2023
Author/s	Matthew Briggs
Checked by	Alex Dougherty / Nathaniel Hyde
Approved by	Ben Allen
Revision	Version 2 - Feb 2025