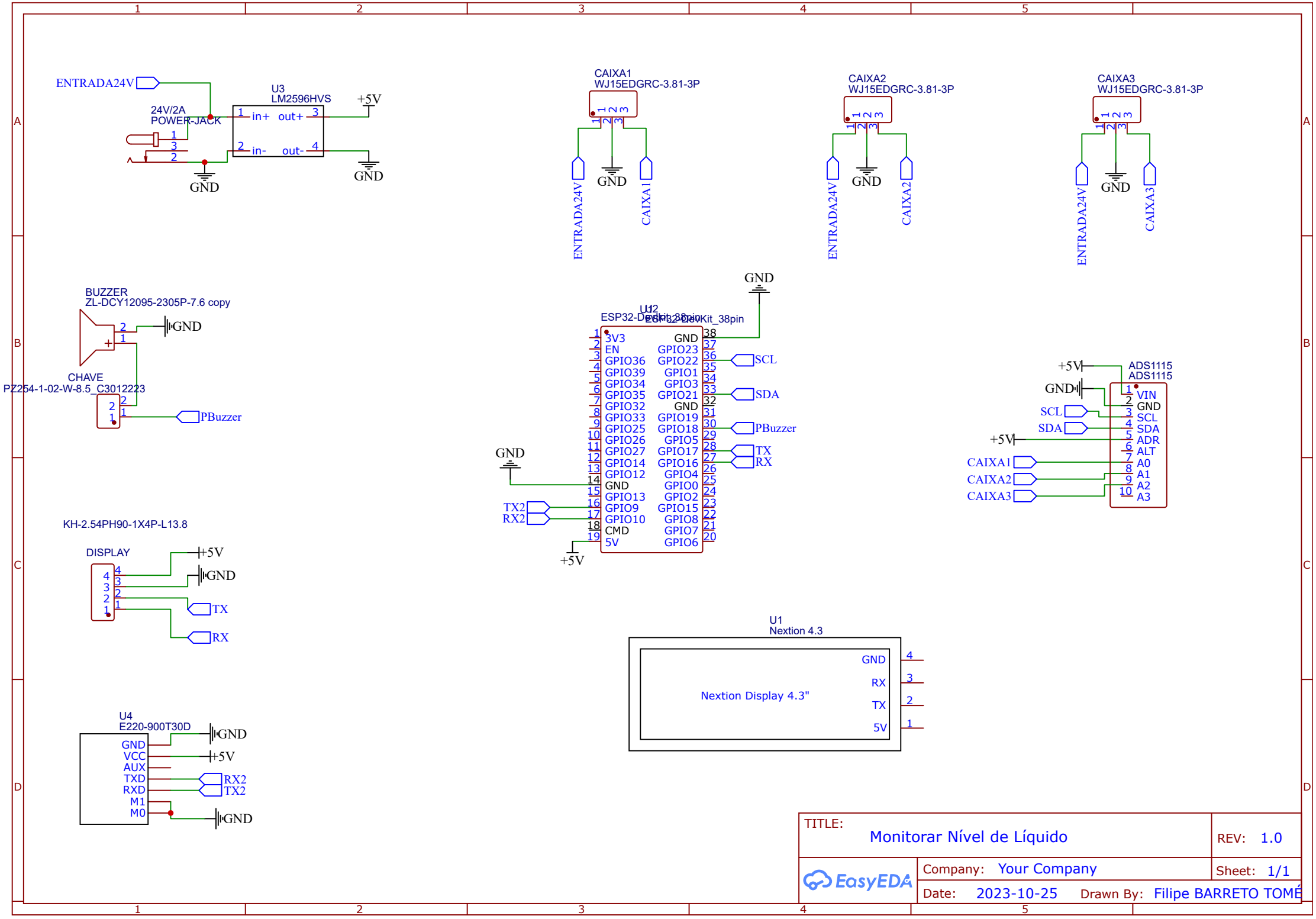

TITLE: Monitorar Nível de Líquido	REV: 1.0
Company: Your Company	Sheet: 1/1
Date: 2023-10-25	Drawn By: Filipe BARRETO TOMÉ