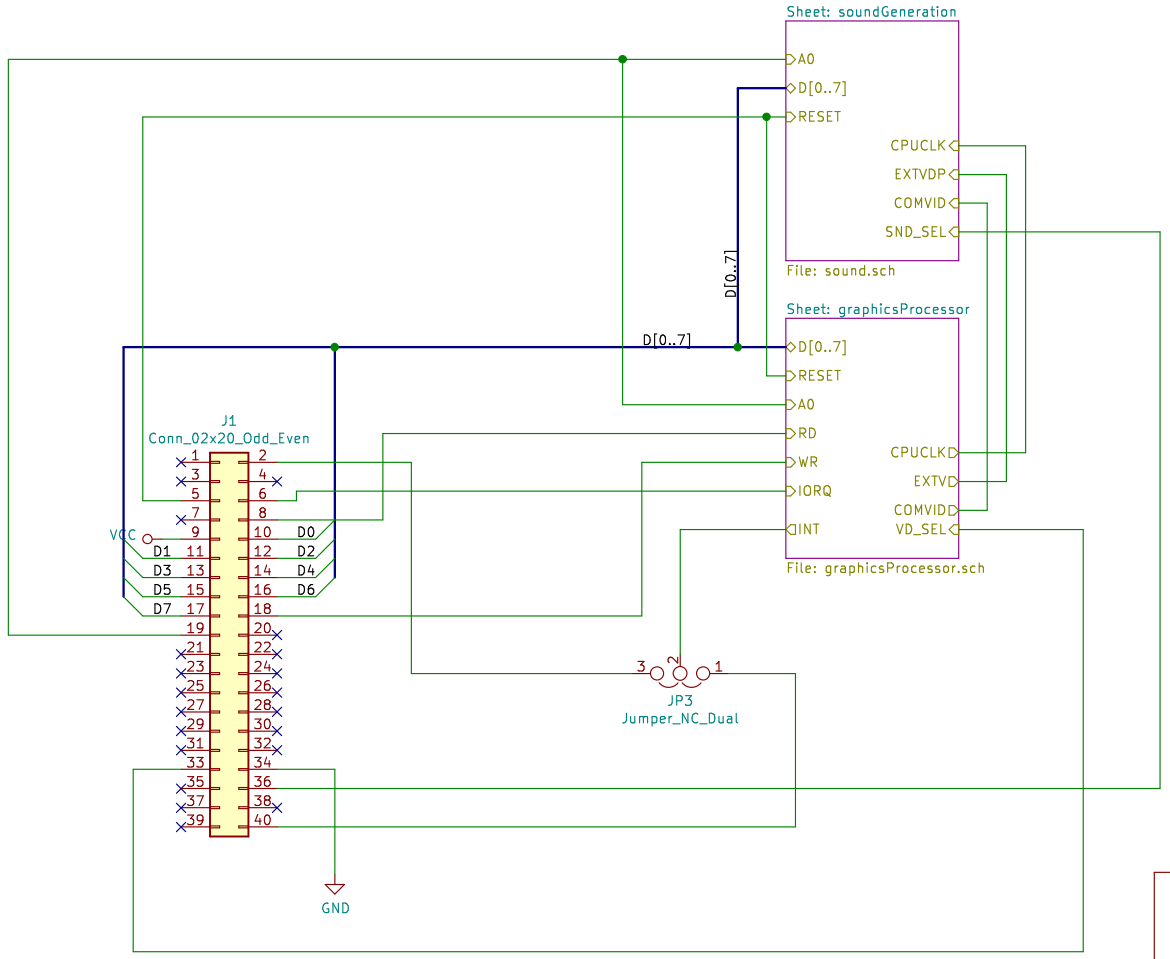

Sheet: /
File: Z80MiniFrame-Sound_Graphics.sch

Title:

Size: A4	Date:	**Rev:**
KiCad E.D.A. kicad (5.1.6)-1		Id: 1/3

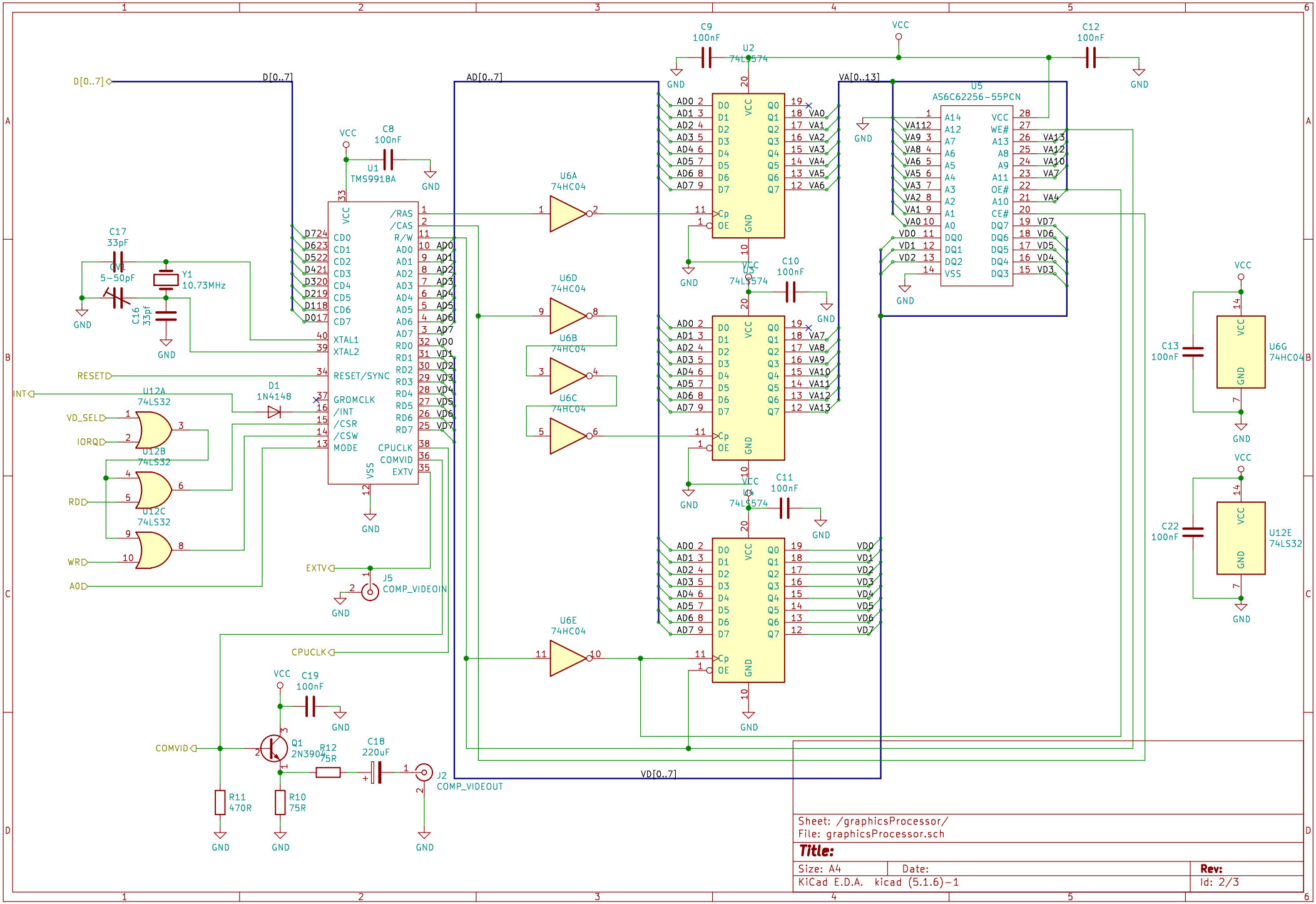
D[0..7]
D[0..7]
AD[0..7]
VA[0..13]
VD[0..7]
U1
TMS9918A
C8
100nF
C9
100nF
C10
100nF
C11
100nF
C12
100nF
C13
100nF
C22
100nF
C17
33pF
C16
33pF
CV1
5-50pF
Y1
10.73MHz
RESET
INT
VD_SEL
IORQ
RD
WR
A0
EXTV
CPUCLK
COMVID
U12A
74LS32
U12B
74LS32
U12C
74LS32
D1
1N4148
J5
COMP_VIDEOIN
J2
COMP_VIDEOUT
Q1
2N3904
R12
75R
C18
220uF
C19
100nF
R11
470R
R10
75R
U2
74LS574
U3
74LS574
U4
74LS574
U5
AS6C62256-55PCN
U6A
74HC04
U6B
74HC04
U6C
74HC04
U6D
74HC04
U6E
74HC04
U6G
74HC04
U12E
74LS32
VCC
GND
Sheet: /graphicsProcessor/
File: graphicsProcessor.sch
Title:
Size: A4
Date:
Rev:
KiCad E.D.A. kicad (5.1.6)-1
Id: 2/3

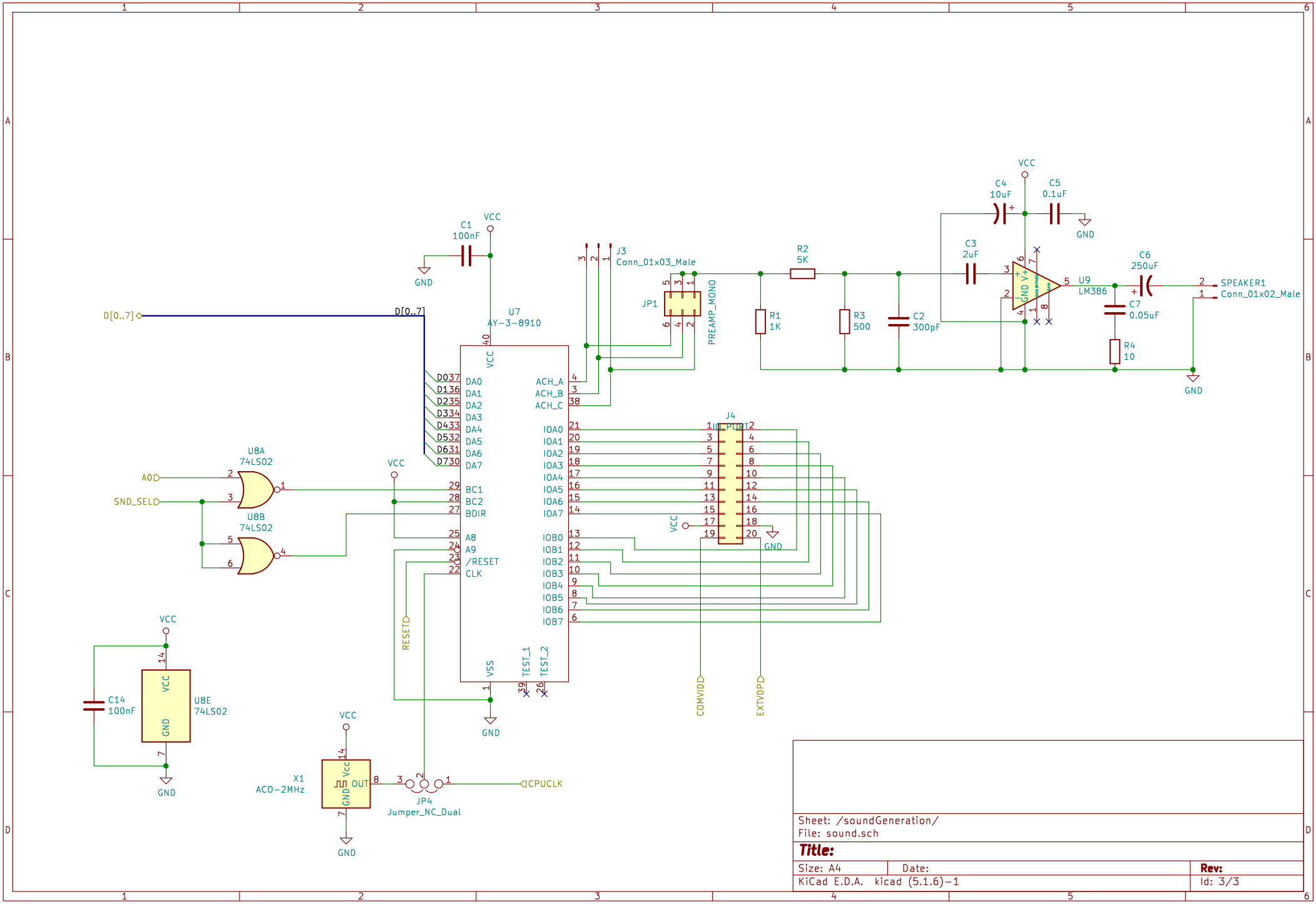

Sheet: /soundGeneration/
File: sound.sch

Title:

Size: A4	Date:	Rev:
KiCad E.D.A. kicad (5.1.6)-1		Id: 3/3