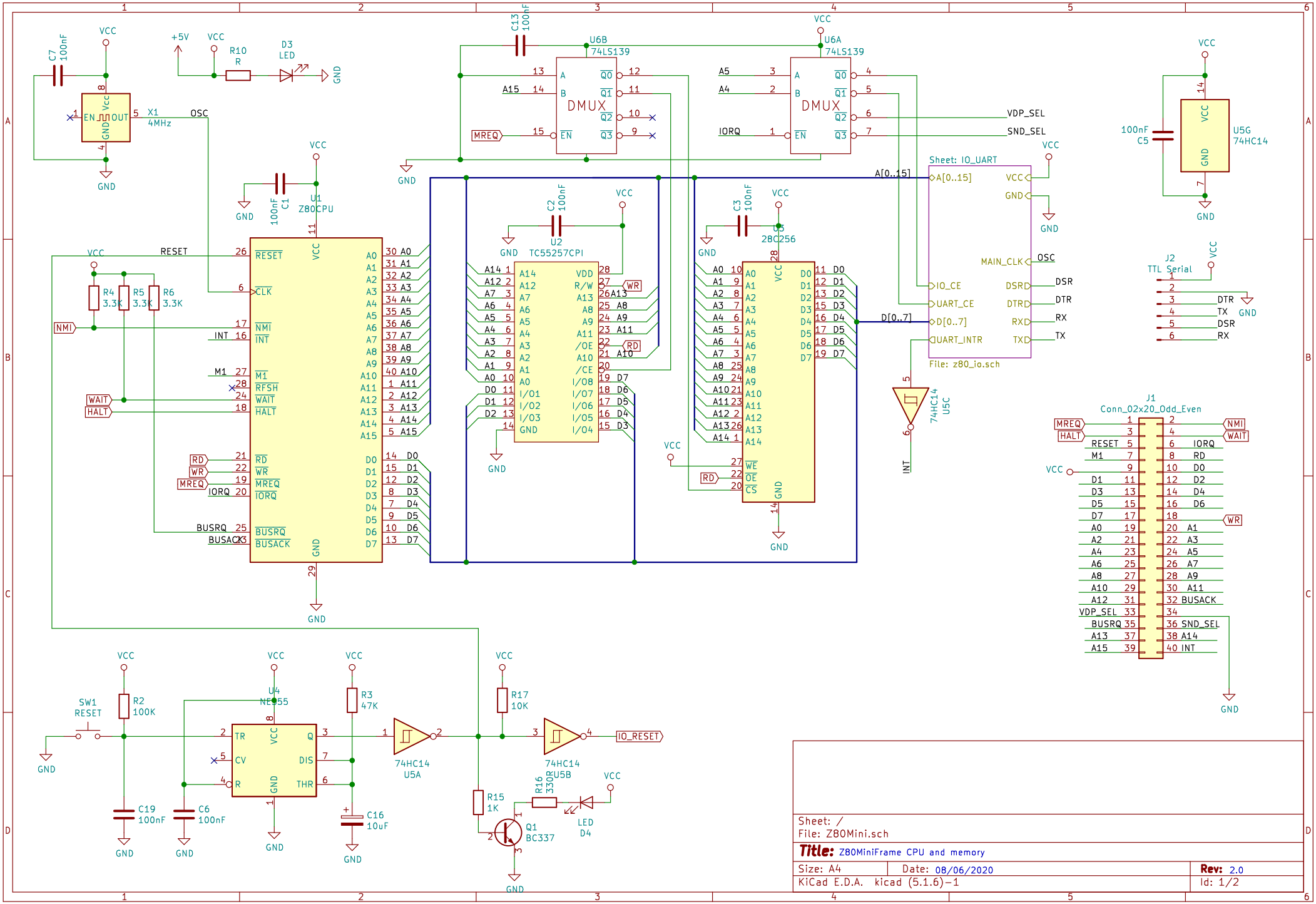
U1
Z80CPU
U2
TC55257CPI
U3
28C256
U6A
74LS139
U6B
74LS139
DMUX
U4
NE555
U5A
74HC14
U5B
74HC14
U5C
74HC14
U5G
74HC14
Sheet: IO_UART
File: z80_io.sch
J1
Conn_02x20_Odd_Even
J2
TTL Serial
X1
4MHz
SW1
RESET
Q1
BC337
LED
D4
D3
LED
VCC
GND
OSC
A[0..15]
D[0..7]
VDP_SEL
SND_SEL
IO_RESET
Sheet: /
File: Z80Mini.sch
Title: Z80MiniFrame CPU and memory
Size: A4
Date: 08/06/2020
Rev: 2.0
KiCad E.D.A. kicad (5.1.6)-1
Id: 1/2

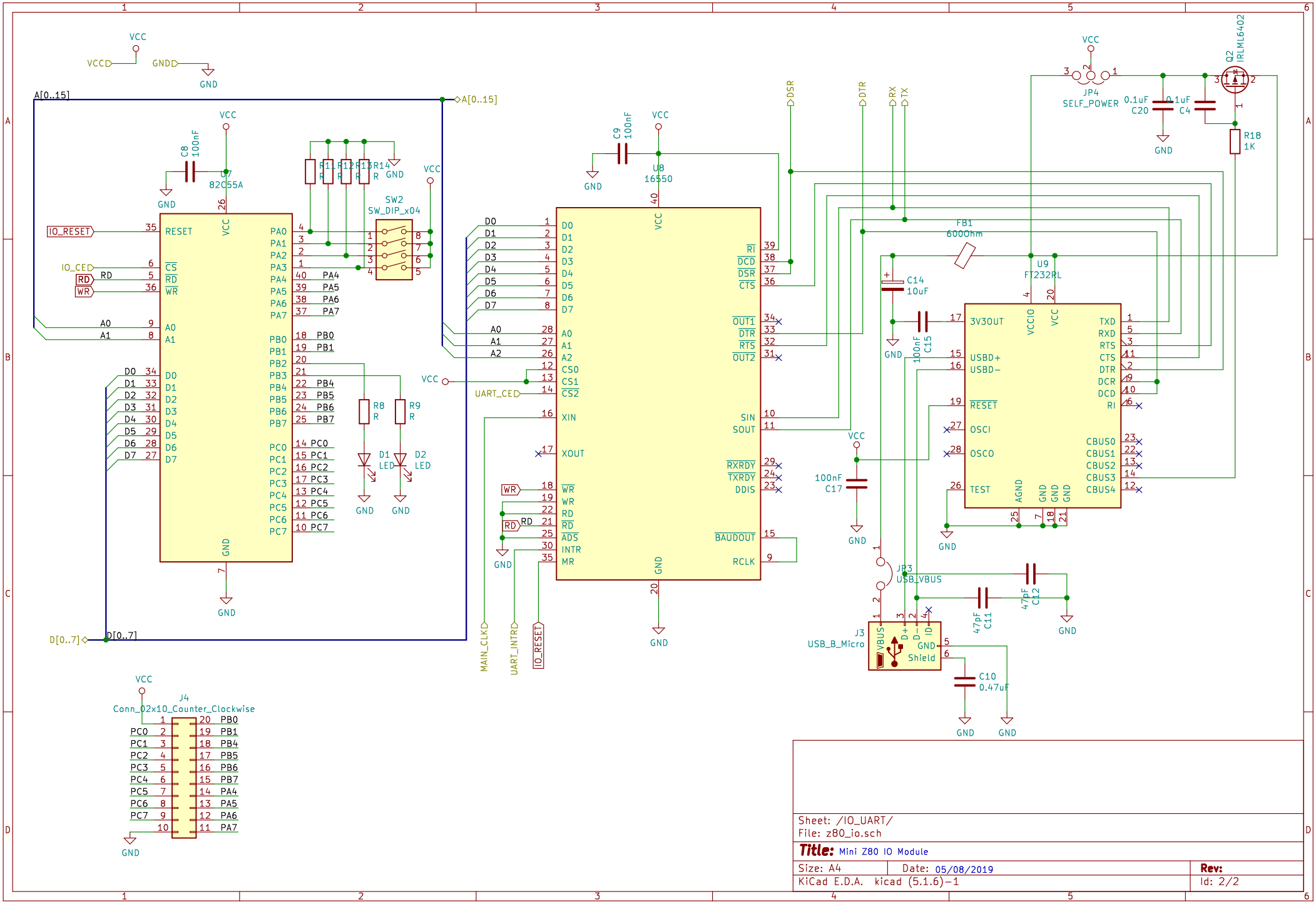

Sheet: /IO_UART/
File: z80_io.sch

Title: Mini Z80 IO Module

Size: A4	Date: 05/08/2019	Rev:
KiCad E.D.A. kicad (5.1.6)-1		Id: 2/2