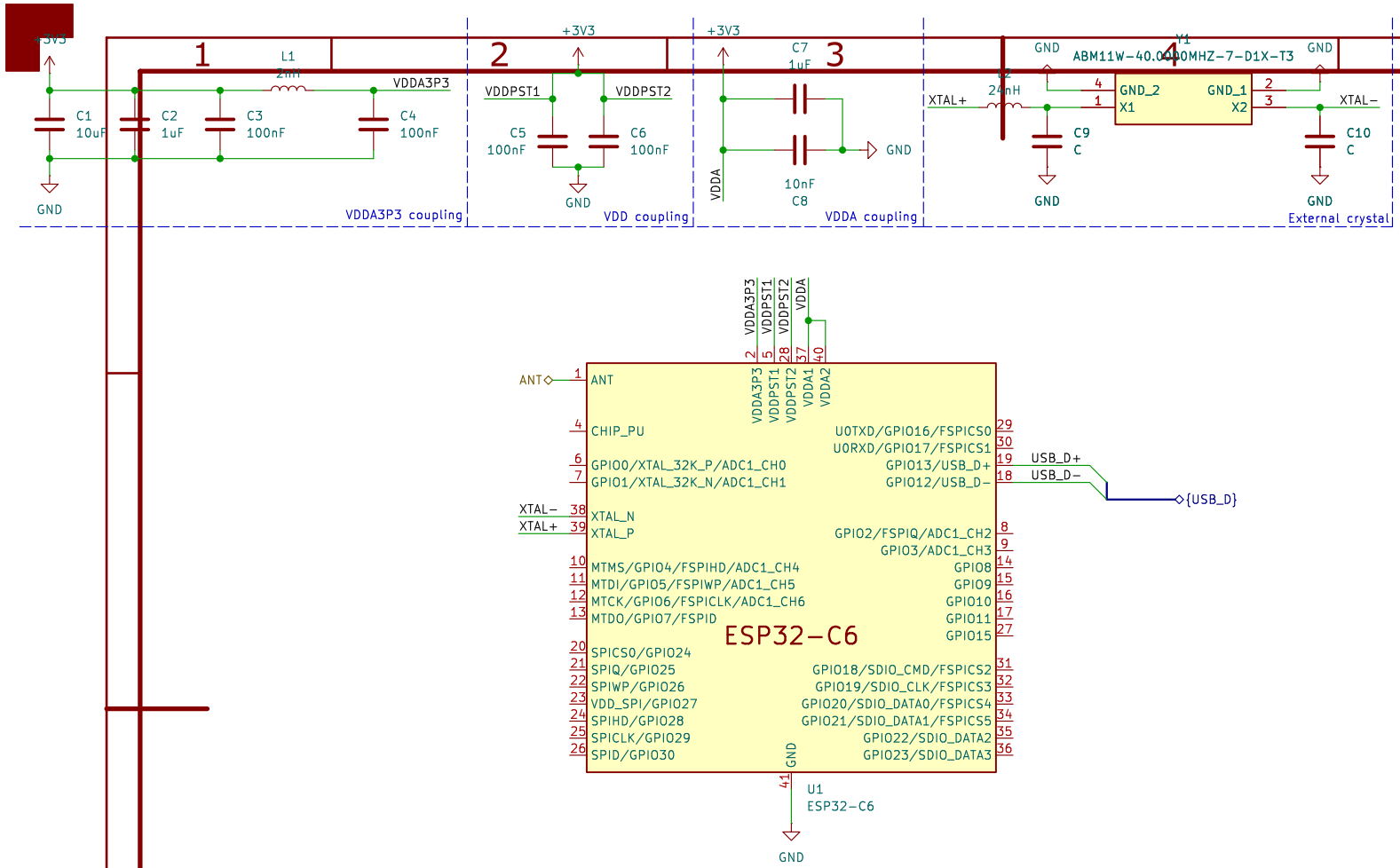

Resp. dept.	Created by	Approved by
${ResponsibleDepartment}	${Creator}	${ApprovalPerson}
Legal owner	Type of document	Document status
FACULTY OF ELECTRICAL ENGINEERING CTU IN PRAGUE	${DocumentType}	${DocumentStatus}
	Title, additional title	${IdentificationNumbe
	${SupplementaryTitle} ${SupplementaryTitle1}	Rev / Release date 2024-11-15 / L. ${La / Sheet 1/1