DWG. No. 26026/052/05

USED ON 26026/052/00

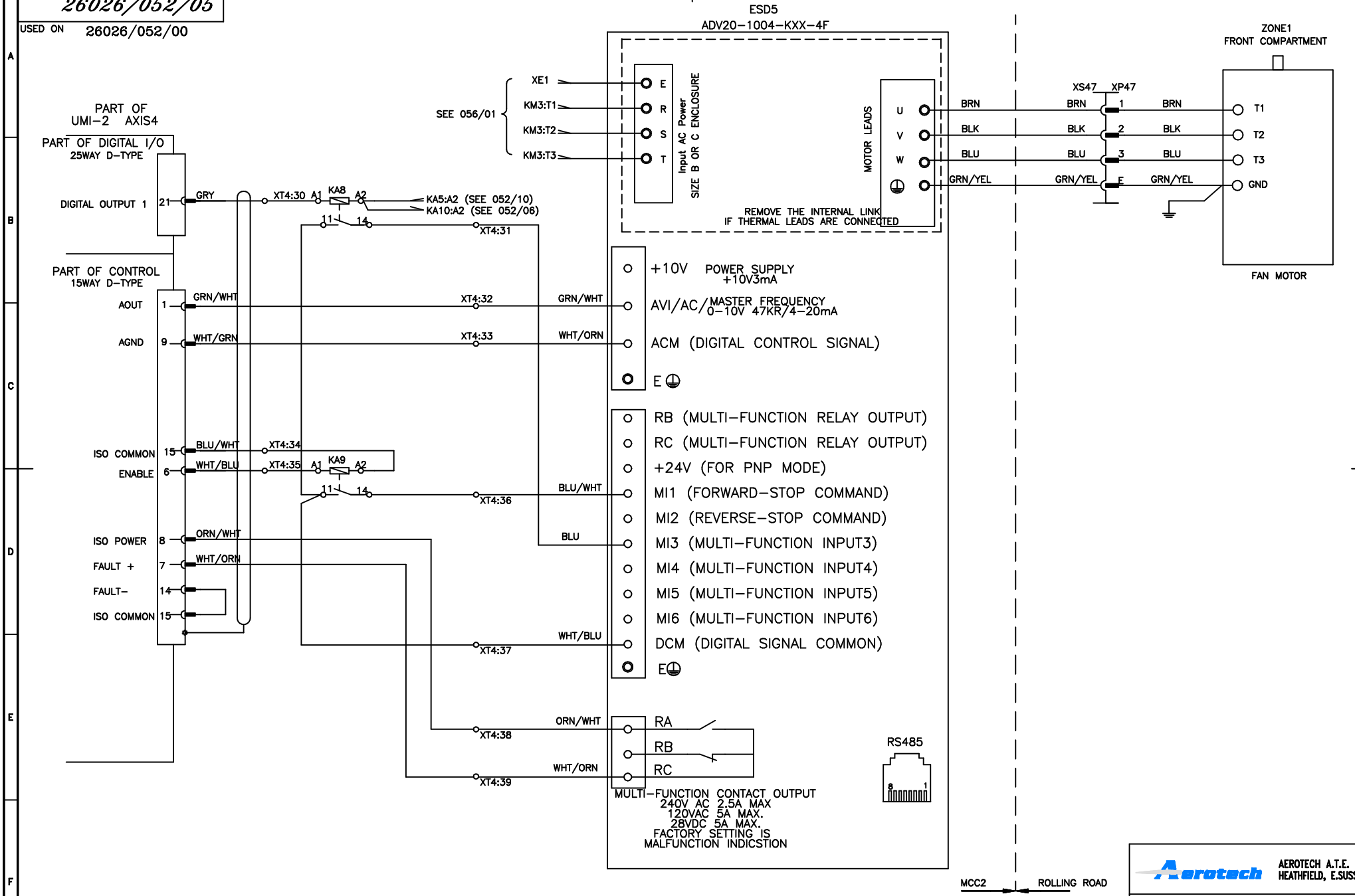

ISSUE	CHANGE	APPR'D	DATE
A	PROVISIONAL	JG	250909

© THIS DRAWING IS SUBJECT TO COPYRIGHT. IT MUST NOT BE COPIED, REPRODUCED, OR OTHERWISE MADE USE OF WITHOUT THE WRITTEN PERMISSION OF AEROTECH A.T.E. LIMITED.

DRAWN BY	APPR'D	CHK'D
JG	DLG	DJR

AEROTECH A.T.E. Ltd
HEATHFIELD, E.SUSSEX

TITLE: SUCTION BELT MOTOR1

DWG. No. 26026/052/05

ISSUE. 1

SHEET 1 OF 1

A2