A study on division methods in Engineering and Mathematical Sciences.

T.J.Moir

School of Engineering, computer and mathematical sciences

Dept of Electrical and electronic Engineering

Auckland University of Technology

St Paul Street

Auckland

New Zealand

tmoir@aut.ac.nz

Abstract

The stability and control of a control system that reciprocates a number or matrix is investigated. Although the mathematics literature is full of matrix inversion methods, none currently investigate the control engineering approach to the problem which is shown here using straight negative feedback which forces an error to zero. For the matrix case it is shown that the method is a discrete-time multivariable control problem with a setpoint as a matrix rather than a vector. Continuous time division is also investigated, and some new division methods investigated. The paper is a fusion of traditional mathematical methods with engineering approaches, resulting in cross disciplinary insight that has been overlooked in the current literature. This paper is the second paper which follows from earlier work by the author on square-root control systems[1].

Keywords: Matrix inverse; control systems; linear algebra; continuous time divider

1.Introduction

The idea of a circuit that performs analogue division has been known for some time. For example in [2] and even earlier[3]. The idea is quite simple and requires a multiplier in the feedback path of an amplifier. In Figure 1 we have modelled the amplifier with a pure integrator. The method works due to the gain of the circuit which forces the error to zero. By defining an appropriate error, we can achieve division. In this case the purpose of the method is to divide unity by the real signal x(t).

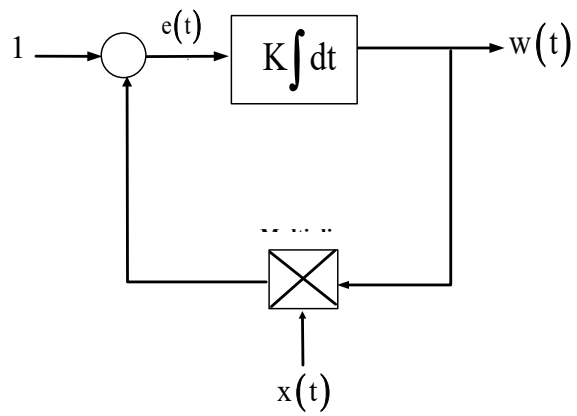

Figure 1. Continuous-time divider block diagram.

We must have $x(t) \neq 0$ as the input and w(t) acts as the output. An integrator is used to remove any steady-state error for a constant input as per usual linear control theory. The error is defined as *e(t)*, and the integrator has a gain term *K*, whose value is to be determined. Usually, the gain is kept as high as possible without causing instability. Of course, a more complex model could be used but no loss of generalisation is found by using this approach. The task is to find out what the output *w(t)* becomes for a given input. By observation we can form the forced or nonhomogeneous differential equation

$$\frac{dw(t)}{dt} = K\left(1 - w(t)x(t)\right) \tag{1}$$

Assume $x(t)$ is a constant $x(t) = x$. In steady state, when $\frac{dw(t)}{dt} = 0$, assuming the closed-loop system is stable, we have the equilibrium solution[4].

$$1 - w(t)x = 0$$

$$w^* = \frac{1}{x} \tag{2}$$

So the circuit gives an output which is the reciprocal of x. To find the gain K for stability we write (1) more generally

$$\frac{dw(t)}{dt} = g\left(w(t)\right) \tag{3}$$

where $g\left(w(t)\right) = K\left(1 - w(t)x\right)$. Then classical stability analysis of a first-order differential equation tells us that for stability, the derivative[4]

$$\left.\frac{dg(w(t))}{dw}\right|_{w=w^*} < 0 \tag{4}$$

giving

$$-xK < 0 \tag{5}$$

So for stability of the closed-loop system we require $sgn(x)=sgn(K)$. This avoids positive feedback.

From (1) write

$$\int \frac{dw(t)}{\left(1 - w(t)x\right)} = K\int dt \tag{6}$$

giving

$$-\left(\frac{1}{x}\right) ln\left|xw(t) - 1\right| + C = Kt \tag{7}$$

There are two conditions to consider. Firstly $xw(t) < 1$ for $t = t_0 = 0$, $w = w_0 = 0$ and then $xw(t) > 1$ for $t = t_0 = 0$, $\mathrm{w} = \mathrm{w}_0$. This gives us C for both cases and we find

$$\begin{aligned} w(t) &= \left(\frac{1}{x}\right)\left(1 - e^{-Kxt}\right), \qquad xw(t) < 1 \\ w(t) &= \left(\frac{1}{x}\right)\left[\left(xw_0 - 1\right)e^{-Kxt} + 1\right], xw(t) > 1 \end{aligned} \tag{8,a,b}$$

Which in both cases converges to the reciprocal value of x. The larger the gain K or input x, the faster the convergence to steady-state. We can think of (8) as first-order responses with time-constant $T=1/Kx$.

2.The discrete-time scalar case.

The discrete-time case has the same basic structure as continuous-time though the equations are different.

The recursive algorithm becomes the nonlinear *difference* equation

$$w_{k+1} = w_k + \eta\left(1 - w_k x_k\right) \tag{9}$$

Consider the case when the input is held constant $x_k = x$ The equilibrium points occur [5]when $w_{k+1} = w_k$ giving

$$w^* = \frac{1}{x} \tag{10}$$

Then write

$$\begin{aligned} w_{k+1} &= g_k \\ &= w_k + \eta\left(1 - w_k x\right) \end{aligned} \tag{11}$$

and the condition for asymptotic stability is that provided g_k is continuously differentiable at w^* then $\left|\frac{d}{dw^*} g\left(w^*\right)\right|_{w^* = \frac{1}{x}} < 1$

Giving

$$\left|1 - \eta x\right| < 1 \tag{12}$$

So that $0 < \eta < \frac{2}{x}$ for positive x. Depending on the sign of x, the stability margins are

$$-\frac{2}{x} < \eta < \frac{2}{x} \tag{13}$$

As for the continuous-time case we must have that $sgn\left(x\right) = sgn(\eta)$ to avoid positive feedback.

From (9), define $a = 1 - \eta x$. We can then substitute k=0,1,2… and obtain by repeated substitution the formula

$$w_n = a^n w_0 + \sum_{i=0}^{n-1} a^i \eta \tag{14}$$

Since from (12), $|a| < 1$, the summation part of (14) is a geometric series with growth-factor a. It is then clear that (14) becomes in the limit

$$\underset{\substack{lim \\ n\to\infty}}{w_n} = 0 + \frac{\eta}{1-a} \to \frac{1}{x} \tag{15}$$

3 Matrix case

The matrix case for reciprocal division is of course commonly known as matrix inversion. This has been considered by other authors with for example Newtons method[6], steepest descent[7] and even neural networks[8]. Here we examine the approach of using basic negative feedback. There has been some previous work on examining mathematical algorithms in terms of feedback control. For example [9] consider the method of steepest descent, [10] in numerical analysis and much earlier work by Tsypkin[11]. Least-squares methods have also been solved using a control-systems approach [12]. A control systems approach to the sample inverse covariance matrix was considered in [13]. Consider the multivariable version of the problem addressed in section 2. The difference equation becomes a matrix difference equation and instead of a constant *x* we have a matrix $\boldsymbol{X}$ and identity matrix $\boldsymbol{I}$:

$$\boldsymbol{W}_{k+1} = \boldsymbol{W}_k + \eta\left(\boldsymbol{I} - \boldsymbol{W}_k \boldsymbol{X}_k\right) \tag{16}$$

By successive substitution in (16) for k=0,1,2… we arrive for a constant matrix $\boldsymbol{X}$ to the expression

$$\boldsymbol{W}_n = \boldsymbol{W}_0\left(\boldsymbol{I} - \eta \boldsymbol{X}\right)^{n-1} + \eta \sum_{i=0}^{n-1}\left(\boldsymbol{I} - \eta \boldsymbol{X}\right)^i \tag{17}$$

Now define $\boldsymbol{A} = \left(\boldsymbol{I} - \eta \boldsymbol{X}\right)$ and recall that a matrix has the property $\underset{\substack{lim \\ n\to\infty}}{\boldsymbol{A}^n} \to 0$, if all of its eigenvalues have magnitude less than unity. This is because the eigenvalues of the spectrum of a matrix raised to the nth power are also raised to the nth power. If they have magnitude less than unity then they must go to zero as n increases. Hence from (17) the first term vanishes for a stable closed-loop system and we are left with the matrix power series

$$\begin{aligned} \underset{\substack{lim \\ n\to\infty}}{\boldsymbol{W}_n} &= 0 + \eta \sum_{i=0}^{\infty} \boldsymbol{A}^i \\ &= \eta\left(\boldsymbol{I} - \boldsymbol{A}\right)^{-1} = \boldsymbol{X}^{-1} \end{aligned} \tag{18}$$

We have that η $\qquad \boldsymbol{A} = \left(\boldsymbol{I} - \eta \boldsymbol{X}\right)$

$Re\left(z^{\dagger}\boldsymbol{X}z\right) \geq 0$ for all non-zero complex vectors z and $z^{\dagger}$ is the conjugate vector. This enables non-symmetric matrices to be classified in this way.

3.1 Closed-loop stability, finding upper bound on η.

To analyse stability we require the following linear-algebra theorem.

Theorem 1:Eigenvalue shifting

If an n-square matrix $\boldsymbol{X}$ has eigenvalues $\lambda_i, i = 1,2...n$, then the matrix $\boldsymbol{A} = \left(\boldsymbol{I} - \eta\boldsymbol{X}\right)$ has eigenvalues $1 - \eta\lambda_i, i = 1,2...n$

Proof: Eigenvalue shifting theorem

The eigenvalues λ and eigenvectors $\boldsymbol{v}$ of $\boldsymbol{X}$ are found from

$$\boldsymbol{X}\boldsymbol{v} = \lambda\boldsymbol{v}$$

Now $\boldsymbol{A} = \left(\boldsymbol{I} - \eta\boldsymbol{X}\right)$, so

$$\begin{aligned}\boldsymbol{A}\boldsymbol{v} &= \left(\boldsymbol{I} - \eta\boldsymbol{X}\right)\boldsymbol{v}\\ &= \boldsymbol{v} - \eta\boldsymbol{X}\boldsymbol{v}\\ &= \left(1 - \eta\lambda\right)\boldsymbol{v}\end{aligned}$$

If $\boldsymbol{X}$ has eigenvalues with *positive real parts* then the requirement that $\boldsymbol{A} = \left(\boldsymbol{I} - \eta\boldsymbol{X}\right)$ has all its roots of magnitude less than unity is achieved by selecting a suitable $\eta > 0$. The converse is also true for a matrix with negative real eigenvalues provided $\eta < 0$.

Then if λ is an eigenvalue of $\boldsymbol{X}$, then by the eigenvalue shifting theorem, $1 - \eta\lambda$ is an eigenvalue of $\left(\boldsymbol{I} - \eta\boldsymbol{X}\right)$. If the eigenvalues have all positive real values or all negative real values then it is always possible to choose an η such that $\left|1 - \eta\lambda\right| < 1$. However, if $\boldsymbol{X}$ has mixed positive and negative eigenvalues then this is not possible with a scalar step-size.

For real positive eigenvalues we can solve $\left|1 - \eta\lambda\right| < 1$ and show that the limit on stability is found from $0 < \eta < \frac{2}{\left|\lambda_{max}\right|}$, where λ_{max} is the maximum eigenvalue of $\boldsymbol{X}$. If the maximum eigenvalue is positive and complex then all eigenvalues must lie within a circle on the complex plane centre $(\frac{1}{\eta},0)$ radius $\frac{1}{\eta}$,see Figure 2. Since practically it would be safe to assume that the eigenvalues are unknown, then the trace of $\boldsymbol{X}$ can be substituted instead, as a conservative over-estimate. This follows because $\lambda_{max} < tr(\boldsymbol{X}) < \sum\lambda_i$. This leads us to the following algorithm for N iterations.

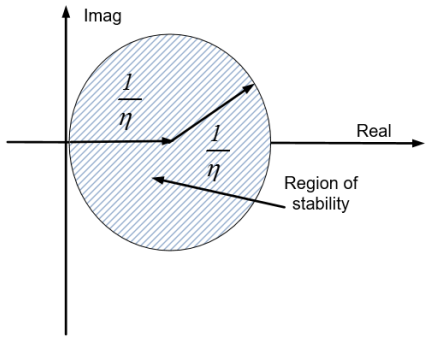

Figure 2. Region of stability in the complex plane for all eigenvalues of $\boldsymbol{X}$

Algorithm 1. Matrix inversion via negative feedback

Initialise: $\boldsymbol{X},\ \eta, \boldsymbol{W}_0, N$

Output: $\boldsymbol{W}$

Loop forever

$\boldsymbol{W}_{k+1} = \boldsymbol{W}_k + \eta\left(\boldsymbol{I} - \boldsymbol{W}_k \boldsymbol{X}_k\right)$

If $e_k = \left\|\left[\boldsymbol{X}\boldsymbol{W}_k - \boldsymbol{I}\right]\right\|_F / \left\|\left[\boldsymbol{X}\right]\right\|_F < \delta$ then stop

Continue loop

We used the normalised error norm measure $e_n = \left\|\left[\boldsymbol{X}\boldsymbol{W}_k - \boldsymbol{I}\right]\right\|_F / \left\|\left[\boldsymbol{X}\right]\right\|_F$ to determine how close the estimate is to the true value at iteration number n. We use this also as a stopping criterion when $e_n < \delta < 10^{-5}$ in most examples. The stopping criterion is only used as a measurement index here and need not be necessarily used in a real-time applications. The loop could be run for a given number of iterations instead.

4.Numerical Experiments

We consider two examples. First the problem of matrix inversion with only real eigenvalues and secondly with two complex and one real.

Example 1

Consider a matrix $\boldsymbol{X} = \begin{bmatrix} 0 & 1 & 0 \\ 0 & 0 & 1 \\ 8 & -14 & 7 \end{bmatrix}$ which has three real eigenvalues $\lambda_{1,2,3} = 1,2,4$. Then $\lambda_{max} = 4$. The step size should be chosen as $0 < \eta < \frac{2}{|\lambda_{max}|} = 0 < \eta < 0.5$. We take $\eta = 0.48$. This value of step size is very close to instability.

Algorithm 1 took 132 iterations to reach an error norm of $e_{132} = 9.71X10^{-6}$. Because the closed-loop system is close to instability, we see the convergence of all of the elements of the inverse matrix in Figure 3. Note the oscillations before settling down to

$$\boldsymbol{W}_{132} = \begin{bmatrix} 1.75 & -0.875 & 0.125 \\ 1 & 0 & 0 \\ 0 & 1 & 0 \end{bmatrix}$$

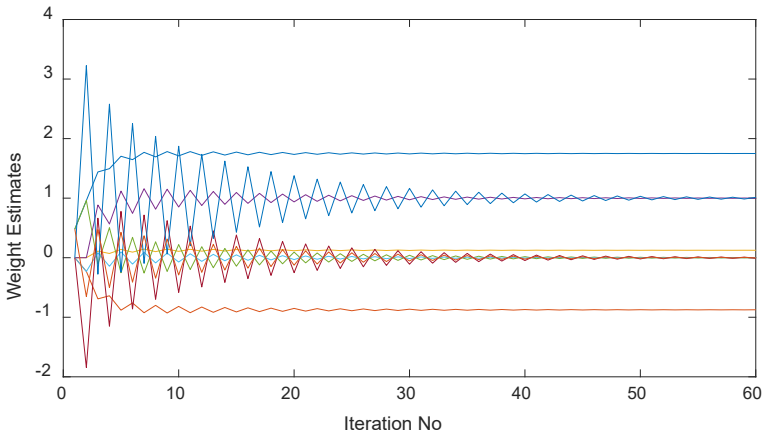

Figure 3. First 60 points of the convergence of each element of matrix inverse. $\eta = 0.48$

Repeating the same example but with a step size of $\eta = 0.2$ gave a convergence in 47 steps to an error norm $e_{47} = 9.189X10^{-6}$. The difference in the elements is shown in Figure 4 which shows a damped response.

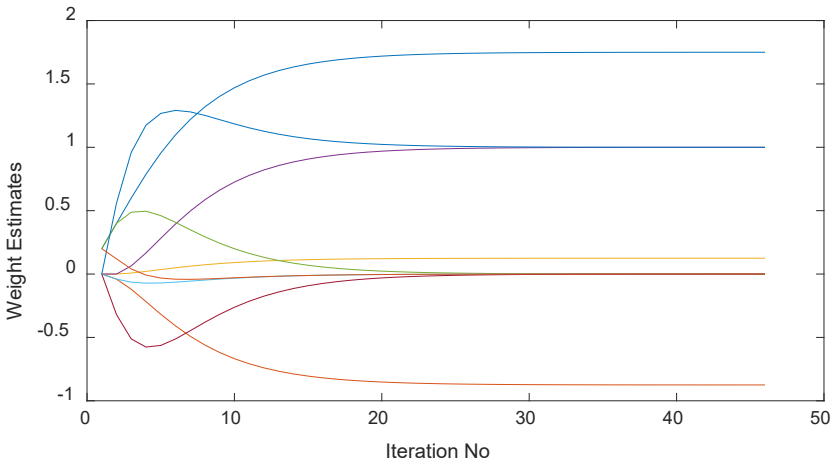

Figure 4. First 60 points of the convergence of each element of matrix inverse. $\eta = 0.2$

Of course for this example we take a very small error norm to give very high accuracy. If this is not so important we can achieve convergence much faster. For an error norm of

$e = 7.667 X 10^{-4}$ $\eta = 0.3$ to the matrix

$$W_{17} = \begin{bmatrix} 1.7438 & -0.8703 & 0.1242 \\ 0.9938 & 0.0047 & -0.0008 \\ -0.0062 & 1.0047 & -0.0008 \end{bmatrix}$$

Example 2

Consider a matrix $X = \begin{bmatrix} 0 & 1 & 0 \\ 0 & 0 & 1 \\ 0.5 & -1.25 & 1 \end{bmatrix}$ which has one real eigenvalue at $\lambda_1 = 0.5$ and two complex at $\lambda_{2,3} = 0.25 \pm 0.968i$. For the complex eigenvalue case we know that for closed-loop stability all eigenvalues must lie within a circle on the complex plane centre $(\frac{1}{\eta},0)$ radius $\frac{1}{\eta}$. If we select $\eta = 0.49$ the circle is shown in Figure 5 with all three eigenvalues.

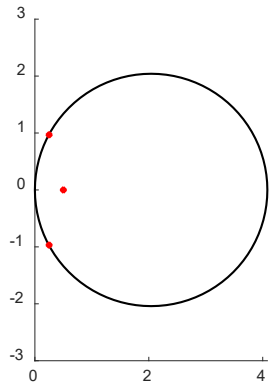

Figure 5. Circle of radius $\frac{1}{\eta}$ plane centre $(\frac{1}{\eta},0)$ and the eigenvalues.

The complex ones lie on the unit circle indicating marginal stability.

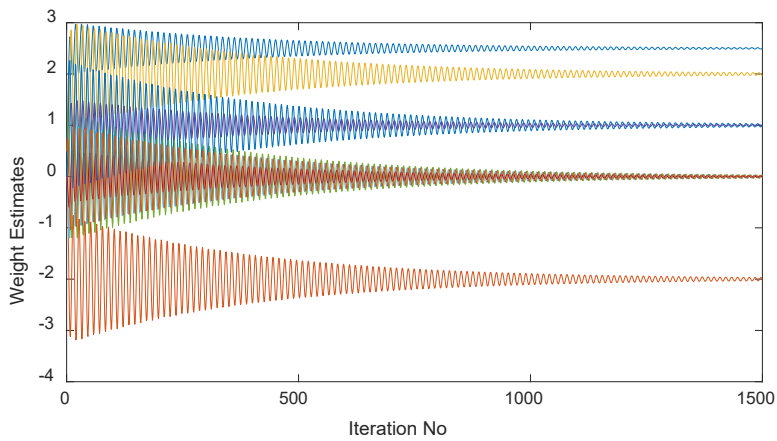

Figure 6. First 1500 points of the convergence of each element of matrix inverse. $\eta = 0.49$

Algorithm 1 took 4628 iterations to reach an error norm of $e_{4628} = 9.75X10^{-6}$. Because the closed-loop system is close to instability, we see the convergence of all of the elements of the inverse matrix in Figure 6. Note the oscillations before settling down to $\boldsymbol{W}_{4628} = \begin{bmatrix} 2.5 & -2 & 2 \\ 1 & 0 & 0 \\ 0 & 1 & 0 \end{bmatrix}$

Repeating the same simulation with $\eta = 0.3$ gave convergence in 371 iterations with $e_{371} = 9.704X10^{-6}$. A graph of steady-state normalised error norm $e_n = \left\| [\boldsymbol{XW}_k - \boldsymbol{I}] \right\|_F / \left\| [\boldsymbol{X}] \right\|_F$ versus time index to converge n is shown in Figure 7 as a family of graphs as step-size increases.

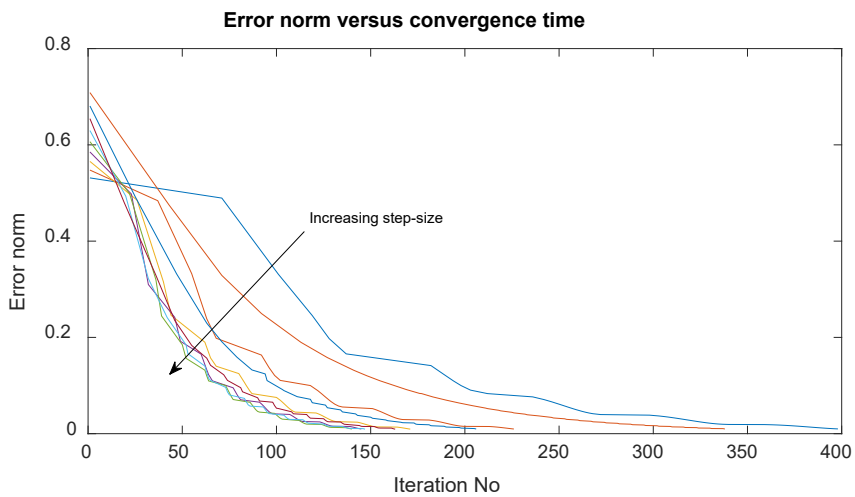

Figure 7. Normalised error norm plotted versus time to converge for increasing step-size. The step-size was varied from $\eta = 0.049$ to $\eta = 0.44$.

5. Comparison with method of Steepest Descent.

Although there are a great many ways to invert a matrix, perhaps the best method to compare our method with is steepest descent. The reason is that it too behaves like a control-system.

Consider the cost function to be minimised

$$J = \frac{1}{2}\left\| [\boldsymbol{I} - \boldsymbol{XW}_k] \right\|_F^2 = \frac{1}{2} tr\left[\boldsymbol{I} - \boldsymbol{XW}_k\right]\left[\boldsymbol{I} - \boldsymbol{XW}_k\right]^T \tag{19}$$

Expanding (19) and differentiating the trace expressions[14] gives us the gradient matrix

$$\begin{aligned} \nabla_{\boldsymbol{W}} &= \frac{\partial J}{\partial \boldsymbol{W}_k} \\ &= \boldsymbol{X}^T\left(\boldsymbol{XW}_k - \boldsymbol{I}\right) \end{aligned} \tag{20}$$

and the steepest descent estimate becomes

$$\boldsymbol{W}_{k+1} = \boldsymbol{W}_k - \eta \nabla_{\boldsymbol{W}} \tag{21}$$

where η is the step-size. Substitute for the gradient yields

$$\boldsymbol{W}_{k+1} = \boldsymbol{W}_k + \eta \boldsymbol{X}^T \left(\boldsymbol{I} - \boldsymbol{X}\boldsymbol{W}_k \right) \tag{22}$$

This gives us the following algorithm.

Algorithm 2. Matrix inversion via steepest descent

Initialise: $\boldsymbol{X},\ \eta, \boldsymbol{W}_0, N$

Output: $\boldsymbol{W}$

Loop forever

$\boldsymbol{W}_{k+1} = \boldsymbol{W}_k + \eta \boldsymbol{X}_k^T \left(\boldsymbol{I} - \boldsymbol{X}_k \boldsymbol{W}_k \right)$

If $e_k = \left\| [\boldsymbol{X}\boldsymbol{W}_k - \boldsymbol{I}] \right\|_F / \left\| [\boldsymbol{X}] \right\|_F < \delta$ then stop

Continue loop

The equilibrium matrix is found when $\boldsymbol{W}_{k+1} = \boldsymbol{W}_k = \boldsymbol{W}^*$ in (22) giving $\boldsymbol{W}^* = \boldsymbol{X}^{-1}$. This indicates that provided (22) can be made stable, it must converge to the inverse matrix.

To find the conditions for stability first write (22) as

$$\boldsymbol{W}_{k+1} = \boldsymbol{G}_k(\boldsymbol{W}_k)$$

$$\boldsymbol{G}_k(\boldsymbol{W}_k) = \boldsymbol{W}_k + \eta \boldsymbol{X}^T - \eta \boldsymbol{X}^T \boldsymbol{X} \boldsymbol{W}_k$$

To differentiate the above matrix expression with respect to a matrix, we need some results of matrix calculus[15-17].Then using these results in the Jacobian matrix

$$\left. \frac{\partial \boldsymbol{G}_k(\boldsymbol{W}_k)}{\partial \boldsymbol{W}_k} \right|_{\boldsymbol{W}=\boldsymbol{W}^*} = \boldsymbol{M} \tag{23}$$
$$= \boldsymbol{I}_{n^2} - \eta(\boldsymbol{I}_n \otimes \boldsymbol{X}^T \boldsymbol{X})$$

Where $\otimes$

$\boldsymbol{M}_r = \boldsymbol{I}_n - \eta \boldsymbol{X}^T \boldsymbol{X}$, since any eigenvalues of $\boldsymbol{M}$ are just the repeated eigenvalues of $\boldsymbol{M}_r$ with multiplicity *n*. This follows by writing $\boldsymbol{M}$ in block matrix format. For example, $\boldsymbol{I}_n \otimes \boldsymbol{X}^T \boldsymbol{X} = diag\left\{ \boldsymbol{X}^T \boldsymbol{X}, \boldsymbol{X}^T \boldsymbol{X} \ldots \boldsymbol{X}^T \boldsymbol{X} \right\}$

$\boldsymbol{M}_r = \boldsymbol{I}_n - \eta \boldsymbol{X}^T \boldsymbol{X}$ by using the earlier eigenvalue shift-theorem, and by first looking at the eigenvalues of $\boldsymbol{X}^T \boldsymbol{X}$. Now $\boldsymbol{X}^T \boldsymbol{X}$

of these eigenvalues are also the singular-values of $\boldsymbol{X}$, denoted with symbol σ. So stability of $\boldsymbol{M}_r$ requires that $\left|1-\eta\sigma_{max}^2\right|$ must lie within the unit circle, where σ_{max} is the maximum singular value of $\boldsymbol{X}$ which is always positive. The stability criterion is therefore for positive η

$$0<\eta<\frac{2}{\sigma_{max}^2} \tag{24}$$

We do not have a special region of stability as is the case for the feedback method since singular-values, and hence their squared values are always real.

Consider example 2 again where $\boldsymbol{X}=\begin{bmatrix} 0 & 1 & 0 \\ 0 & 0 & 1 \\ 0.5 & -1.25 & 1 \end{bmatrix}$. A step size of $\eta=0.3$ gave convergence in 537 iterations with $e_{537}=9.913X10^{-6}$. This compares with 371 for the same step-size as the feedback method. From (24) the maximum step-size was found to be $\eta_{max}=0.5339$.

A graph of steady-state normalised error norm $e_n=\left\|\left[\boldsymbol{XW}_k-\boldsymbol{I}\right]\right\|_F/\left\|\left[\boldsymbol{X}\right]\right\|_F$ versus time index to converge n is shown in Figure 8 as a family of graphs as step-size increases. Compared with the feedback method of Figure 7, the convergence is much slower. Of course there are methods in the literature with faster convergence rates for inverting matrices[18, 19], but here we are primarily concerned with control-systems approaches. However, a considerable advantage of the steepest descent approach over ordinary feedback is that it can work with any arbitrary non-singular square matrix. The feedback method is restricted to positive-definite or negative definite matrices.

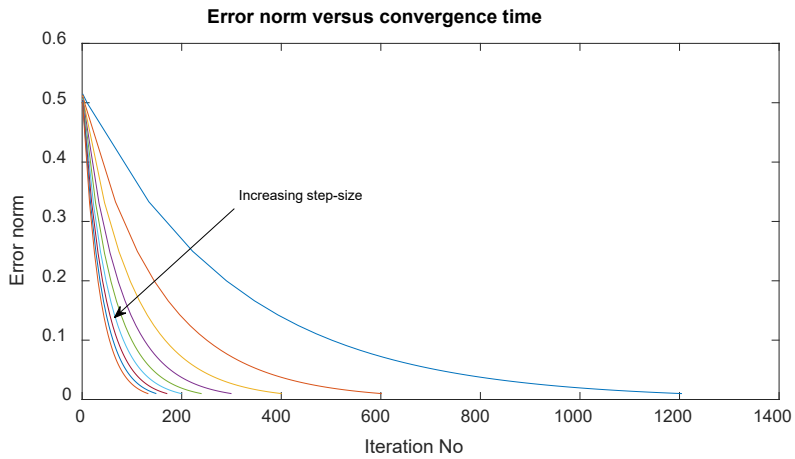

Figure 8. Normalised error norm plotted versus time to converge for increasing step-size. The step-size was varied from $\eta=0.049$ to $\eta=0.44$. Steepest descent case.

It is interesting to work backwards at this point to the equivalent analogue steepest-descent divider. This is shown in appendix 1.

6.Newtons and higher order convergence methods

We can apply the same idea as the previous section to obtain faster convergence. Newton's method is known to have quadratic convergence and to find the solution we minimise the following quadratic criterion for matrix inversion when $\boldsymbol{X>0}$.

Although Newtons method is by far the fastest of any of the previous methods, its problem is that it may not converge at all (i.e., go unstable) for certain conditions and its stability is very much governed by obtaining the right initial conditions. We minimize

$$L = \frac{1}{2}\left\|\boldsymbol{I} - \boldsymbol{X}\boldsymbol{W}_k\right\|_F^2 \tag{25}$$

We can define a matrix error as in a control-system, given as $\boldsymbol{E}_k = \boldsymbol{I} - \boldsymbol{X}\boldsymbol{W}_k$ and minimize $L = \frac{1}{2}\left\|\boldsymbol{E}_k\right\|_F^2$.

$$\begin{aligned}
\nabla_{\boldsymbol{W}} &= \frac{\partial L}{\partial \boldsymbol{W}_k} \\
&= \left(\frac{\partial tr\boldsymbol{E}_k}{\partial \boldsymbol{W}_k}\right)\boldsymbol{E}_k \\
&= -\boldsymbol{X}^T\boldsymbol{E}_k \\
&= \boldsymbol{J}^T\boldsymbol{E}_k
\end{aligned}$$

Where the transpose of the Jacobian multiplies the matrix error. The Jacobian then becomes

$$\boldsymbol{J} = -\boldsymbol{X}$$

The Newton update in multivariate form is

$$\begin{aligned}
\boldsymbol{W}_{k+1} &= \boldsymbol{W}_k - \boldsymbol{J}^{-1}\boldsymbol{E}_k \\
&= \boldsymbol{W}_k + \boldsymbol{X}^{-1}\left[\boldsymbol{I} - \boldsymbol{X}\boldsymbol{W}_k\right] \\
&= \boldsymbol{X}^{-1}
\end{aligned} \tag{26}$$

Which is not very helpful since the solution is the question to be solved, but if we replace the inverse of $\boldsymbol{X}$ with $\boldsymbol{W}_k$ in (26), with the assumption that the initial guess is close enough we get[20]

$$\boldsymbol{W}_{k+1} = \boldsymbol{W}_k + \boldsymbol{W}_k\left[\boldsymbol{I} - \boldsymbol{X}\boldsymbol{W}_k\right] \tag{27}$$

the result of Schulz [21] and later modified in [22] for the generalised inverse is then given by

$$\boldsymbol{W}_{k+1} = \boldsymbol{W}_k\left(2\boldsymbol{I} - \boldsymbol{X}\boldsymbol{W}_k\right) \tag{28}$$

This has a more conventional look about it when we write it in the following form with an error matrix $\boldsymbol{E}_k = \boldsymbol{I} - \boldsymbol{X}\boldsymbol{W}_k$.

$$\boldsymbol{W}_{k+1} = \boldsymbol{W}_k + \boldsymbol{W}_k\boldsymbol{E}_k \tag{29}$$

Of course, for the Newton method there is no step-size at all since $\boldsymbol{W}_k$ performs this function as it changes. However, (29) as illustrated by Figure 9, has the familiar look of a system with negative feedback but with an added inner multiplicative loop. In Figure 9, q^{-1} is the discrete time backwards shift operator.

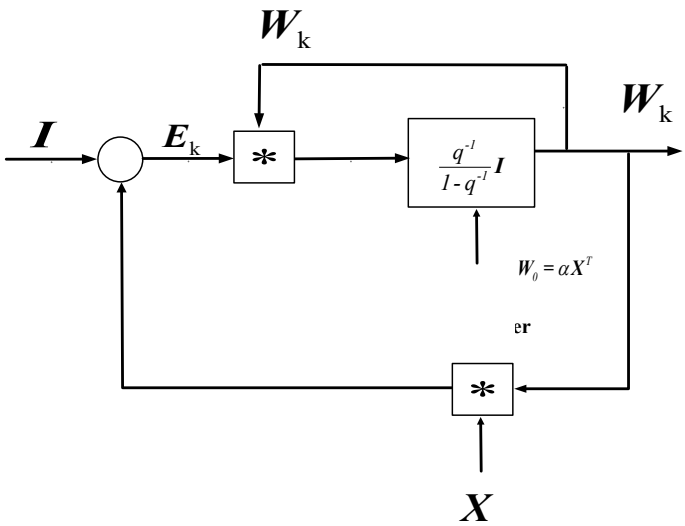

Figure 9 Matrix Inverse via Newton method as a multivariable control system**.**

The gain of the system is a matrix however, which is time varying. It is known that the Newton method does not have guaranteed convergence, but by the right selection of initial conditions convergence can be guaranteed. We cannot find the limiting gain of the system because the gain of the system depends on its output. We can however prove the convergence for the right initial conditions.

Convergence of Newtons method

Assuming positive definite ***X,*** the convergence of this algorithm[22] is critically dependent on the *initial conditions*. If we choose $\boldsymbol{W}_0 = \alpha \boldsymbol{X}^T$ where $0 < \alpha < \frac{2}{\lambda_{max}}$, where λ_{max} is the largest eigenvalue of $\boldsymbol{X}^T\boldsymbol{X}$. (also the squared maximum singular value of $\boldsymbol{X}$) then $\boldsymbol{W}_k \to \boldsymbol{X}^{-1}$ as $k \to \infty$. For the same example as for gradient descent, convergence was achieved in 9 steps with $\alpha = \frac{1.8}{\lambda_{max}} = 0.29$.

Proof

The proof yields an interesting result. Let $\boldsymbol{E}_k = \boldsymbol{I} - \boldsymbol{X}\boldsymbol{W}_k$

$$\boldsymbol{W}_{k+1} = \boldsymbol{W}_k + \boldsymbol{W}_k\boldsymbol{E}_k = \boldsymbol{W}_k\left(\boldsymbol{I} + \boldsymbol{E}_k\right).$$

When k=0, and $\boldsymbol{W}_0 = \alpha \boldsymbol{X}^T$, we have the eigenvalues of $\boldsymbol{E}_0 = \boldsymbol{I} - \alpha \boldsymbol{X}\boldsymbol{X}^T$ defined as $1 - \alpha\lambda_i$,

λ_i are the eigenvalues of $\boldsymbol{XX}^T$. Now provided α is appropriately chosen according to $\left|1-\alpha\lambda_{max}\right|<1$, where λ_{max} is the maximum eigenvalue of $\boldsymbol{XX}^T=\boldsymbol{X}^T\boldsymbol{X}$, then we will have $\lim_{n\to\infty}\boldsymbol{E}_k^n\to 0$. We then can prove that $\boldsymbol{E}_k=\boldsymbol{I}-\boldsymbol{XW}_k=\left(\boldsymbol{I}-\boldsymbol{XW}_{k-1}\right)\boldsymbol{E}_{k-1}=\boldsymbol{E}_{k-1}^2$. Extending this we have $\boldsymbol{E}_k^n=\boldsymbol{E}_0^{2n}$ and hence the error matrix decreases to zero rapidly based on the initial conditions. This is quadratic convergence since $\left\|\boldsymbol{E}_{k+1}\right\|\le\left\|\boldsymbol{E}_k\right\|^2$.

This fast convergence is attractive, but we can see that (29) by substituting $\boldsymbol{W}^*=\boldsymbol{W}_{k+1}=\boldsymbol{W}_k$ has two equilibrium values at $\boldsymbol{W}^*=0,\boldsymbol{X}^{-1}$. The first of these is unstable and the second a stable equilibrium point. It is interesting that the same stability criterion holds for the Newton method as for gradient descent with the provision that for the Newton method the initial conditions (with gain fixed at unity) must be satisfied as opposed to the gain for gradient descent.

A higher-order convergence version of this has recently been derived, [23], which has 18th order of convergence as opposed to the usual 2nd order quadratic convergence of the ordinary Newton method. The new method requires seven matrix multiplies per iteration as opposed to the method above which has two. Other authors have also contributed to this area with higher order algorithms[24-26].

Consider the scalar case. We write from (29)

$$w_{k+1}=w_k+w_k\left(1-xw_k\right) \tag{30}$$

For initial condition w_0 we get a solution to this nonlinear difference equation of

$$w_k=\frac{1-\left(1-xw_0\right)^{2^k}}{x} \tag{31}$$

and we can see that we require $\left|1-xw_0\right|<1$ for convergence (stability) to occur. If $w_0=\alpha x$ then we have $\left|1-\alpha x^2\right|<1$ or $0<\alpha<\frac{2}{x^2}$. We can of course add a non-unity gain such as $w_{k+1}=w_k+\eta w_k\left(1-xw_k\right)$, but quadratic convergence is no longer guaranteed. We also note from (26) that if $w_0=0$, then $w_k\to 0$. We see that (31) has a power of 2^k when decaying which is an indication of quadratic convergence.

6.1. Higher order convergence methods

First discovered by Krishnamurthy[27] and later applied to matrices[28, 29], greater convergence rates can be achieved with slight modification to the previous Newton algorithm. For constant matrix $\boldsymbol{X}$>0, define an error matrix as

$$\boldsymbol{E}_k=\boldsymbol{I}-\boldsymbol{XW}_k \tag{32}$$

The inverse iterative equation is defined by its convergence type.

Quadratic (from (29):

$$\boldsymbol{W}_{k+1} = \boldsymbol{W}_k \left(\boldsymbol{I} + \boldsymbol{E}_k \right) \tag{33}$$

Cubic:

$$\boldsymbol{W}_{k+1} = \boldsymbol{W}_k \left(\boldsymbol{I} + \boldsymbol{E}_k \left(\boldsymbol{I} + \boldsymbol{E}_k \right) \right) \tag{34}$$

Quartic:

$$\boldsymbol{W}_{k+1} = \boldsymbol{W}_k \left(\boldsymbol{I} + \boldsymbol{E}_k \left(\boldsymbol{I} + \boldsymbol{E}_k \left(\boldsymbol{I} + \boldsymbol{E}_k \right) \right) \right) \tag{35}$$

and so on. These can all be drawn as a multivariable system with negative feedback and multivariable integrators. The number of matrix multipliers within a loop increases with convergence order. Instead of using the maximum eigenvalue of the matrix product $\boldsymbol{X}^T\boldsymbol{X}$ to determine the initial condition, we use instead a simpler form $\boldsymbol{W}_0 = \alpha \boldsymbol{X}^T$ where $\alpha = \dfrac{1}{tr\left[\boldsymbol{X}^T\boldsymbol{X}\right]}$ since the trace of a matrix is always bigger than the maximum eigenvalue. The interesting approach here is to now work backwards to the analogue divider case by using the matrix results. For example, for second order (Newton) and third order convergence (we do not usually refer to convergence in continuous time but the time to reach steady-state or convergence time is equivalent) we can write for $x > 0$:

$$e(t) = \left(1 - w(t)x(t)\right) \tag{36}$$

$$\frac{dw(t)}{dt} = Kw(t)e(t) \tag{37}$$

$$\frac{dw(t)}{dt} = Kw(t)e(t)\left(1 + e(t)\right) \tag{38}$$

$$\frac{dw(t)}{dt} = Kw(t)e(t)\left(1 + e(t)\left(1 + e(t)\right)\right) \tag{39}$$

Where (37), (38) and (39) represent control systems for 2nd order, 3rd order and 4th order convergence, respectively. Consider cubic convergence described by equation (38). We can analyse this equation as follows provided $x(t) = x$, a constant. It has three equilibrium points $w^* = 0, \frac{1}{x}, \frac{2}{x}$. Only $w^* = \frac{1}{x}$ is a stable equilibrium point. Solving (38) with computer algebra gives

$$w(t) = \frac{e^{-2Kt}\left(-1 + 2xw_0 - x^2w_0^2\right) - 2xw_0 + x^2w_0^2 + \left[1 + 2xw_0 + x^2w_0^2\right]\sqrt{e^{-4Kt}\left[\dfrac{1 - 2xw_0 + 2xw_0e^{2Kt} + x^2w_0^2 - x^2w_0^2e^{2Kt}}{\left(-1 + xw_0\right)^2}\right]}}{x\left[e^{-2Kt}\left(-1 + 2xw_0 - x^2w_0^2\right) - 2xw_0 + x^2w_0^2\right]} \tag{40}$$

As $t \to \infty$ (40) becomes in steady state

$$w(t)\Big|_{t\to\infty} \to \frac{-2xw_0 + x^2 w_0^2}{x\left[-2xw_0 + x^2 w_0^2\right]} \tag{41}$$

We see from (41) that when $w = 0$,(41) is undefined since it has a zero on numerator and denominator. Furthermore, the same occurs when $w = \frac{2}{x}$, but the correct solution which is stable occurs when $w = \frac{1}{x}$. Figure 10 shows the block diagram of a cubic convergent continuous time divider.

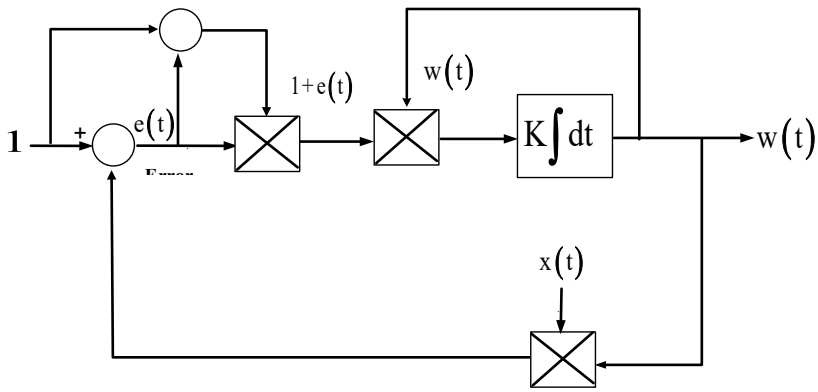

Figure 10. Block diagram of a cubic convergent analogue divider

A comparison of quadratic, cubic and quartic analogue dividers is shown in Figure 11 when $x = 0.2$ and the initial condition on the integrator is set to $w_0 = 0.2$. The steady state value is 5 and the gain $K = 1$ is set to unity.

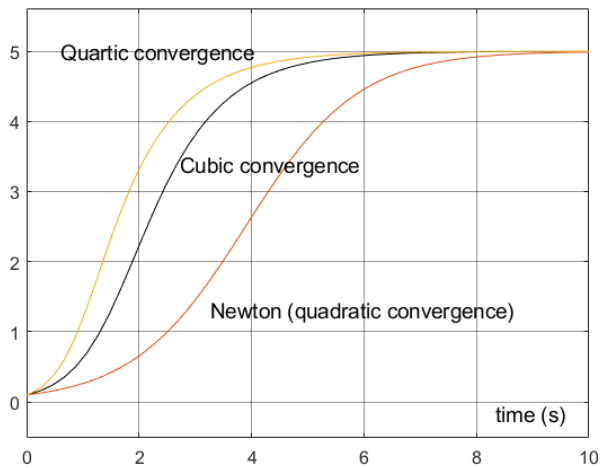

Figure 11. Comparison of quadratic, cubic and quartic methods for analogue division control system.

Increasing the gain speeds up the response of all the systems by an equal amount. In a real circuit the gain is unlikely to be unity but is convenient here just for comparison purposes. The systems are always stable provided the initial condition is nonnegative. If the initial value $w_0 > \frac{2}{x}$ the loop becomes unstable since it converges to the unstable equilibrium point at $w^* = \frac{2}{x}$. Initialising $w_0 < 0$ also results in instability.

Scalar Analogue Illustrative example.

Consider the problem of finding the reciprocal of the signal $x(t) = 1 + 0.5\,sin(\omega t)$. This problem requires the loop to continuously track the inverse as the value changes with time. We use the third order convergent continuous time loop defined by equation (38). Before showing the results, it is important to see that from Figure 10 that the dynamics within the loop that defines the nominal bandwidth is a pure integrator whose gain we have set to $K = 1$. Of course, this gain can be much higher but is shown in this normalised form for convenience. For an integrator, its frequency response intersects unity gain at $\omega = K$ rad/s and this is usually defined as the unity gain bandwidth of the loop. A system with negative feedback is known to track up to 1/10th of this frequency or 0.1rad/s. Hence, we initially set $x(t) = 1 + 0.5\,sin(0.1t)$ and then increase the frequency to $\omega = 0.5$ rad/s which is outside of the useful tracking range. Figure 12 and Figure 13 shows the comparison of the divider output to the ideal result and shows near perfect tracking for $\omega = 0.1$ rad/s and the loop losing bandwidth and hence tracking ability for $\omega = 0.5$ rad/s.

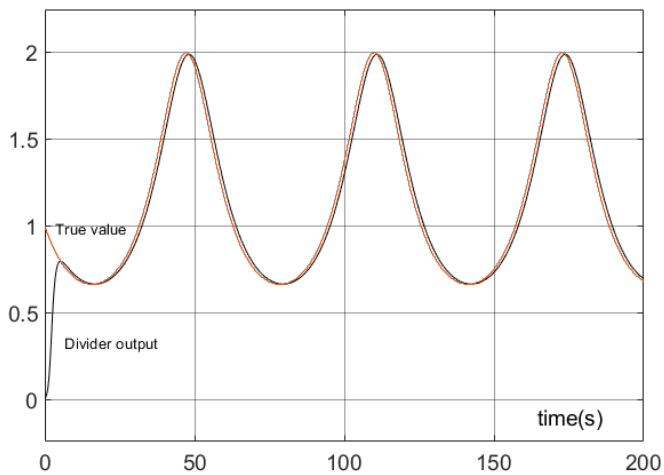

Figure 12 Divider response when $\omega = 0.1$ rad/s and $x(t) = 1 + 0.5\,sin(\omega t)$. Comparison with true value

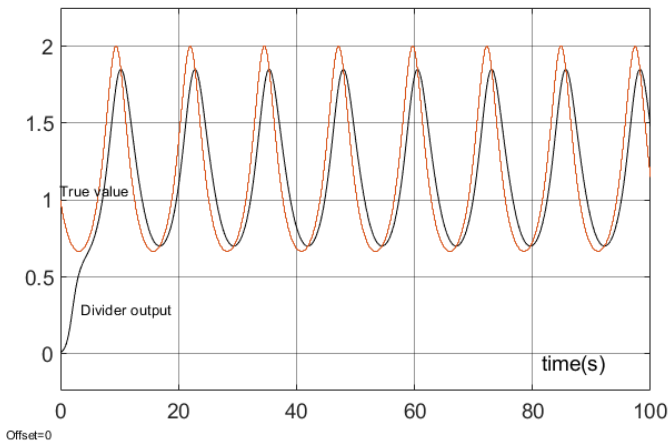

Figure 13 Divider response when $\omega = 0.5$ rad/s and $x(t) = 1 + 0.5\,sin(\omega t)$. Comparison with true value

In Figure 13 the response loses gain and is phase shifted like any system behaves when the input frequency is increased. Dividers such as this which operate at high frequencies have application in communication systems[30].

6.2 Relationship to Riccati equations

Consider the nonlinear differential equation shown below in (42)[31]

$$\frac{dw(t)}{dt} = Q_0(t) + Q_1(t)w(t) + Q_2(t)w^2(t) + Q_3(t)w^3(t) + \ldots \qquad (42)$$

It is a derivative equated to a polynomial where $Q_i(t), i = 0, 2\ldots$ are arbitrary functions of time. When the polynomial is of order 2, such an equation is known as a Riccati equation. The coefficients can be constant or time-varying. They were first studied for the second order case by Jacopo Riccati in the 18th century. The matrix version was popularised in Engineering by R.Kalman[32] in the early 1960s both in continuous and discrete-time. Take equation (37) and substitute the error from (36)

$$\begin{aligned} \frac{dw(t)}{dt} &= Kw(t)\big(1 - w(t)x(t)\big) \\ &= Kw(t) - Kx(t)w^2(t) \end{aligned} \qquad (43)$$

Which shows that (43) is indeed a scalar continuous-time Riccati equation. For third order polynomials they are commonly known as Riccati-Abel equations[33].

6.3 Multivariable Continuous-time matrix inversion

For the multivariable case, continuous time matrix inversion was first used in [34], but the method used a direct method and not negative feedback. Continuous time neural networks were

used later for time varying matrices[35]. In [35], the nonlinear method applied to steepest descent is used.

$$\dot{\boldsymbol{W}}(t) = K\boldsymbol{W}^T(t)\mathcal{F}\left[\boldsymbol{E}(t)\right] \tag{44}$$

Where $\mathcal{F}[.]$ is a matrix activation function mapping of neural networks[8]. Other work results in matrix inversion as the solution of a set of linear equations[36].

A similar approach can be used to Krishnamurthy's discrete-time matrix results for the continuous-time matrix inversion problem. Equations (32)-(35) suggests for a positive definite constant matrix $\boldsymbol{X}$, equations of the following form be used:

Error matrix:

$$\boldsymbol{E}(t) = \boldsymbol{I} - \boldsymbol{X}\boldsymbol{W}(t) \tag{45}$$

For quadratic continuous-time matrix inversion:

$$\dot{\boldsymbol{W}}(t) = K\boldsymbol{W}(t)\boldsymbol{E}(t) \tag{46}$$

For cubic continuous-time matrix inversion:

$$\dot{\boldsymbol{W}}(t) = K\boldsymbol{W}(t)\boldsymbol{E}(t)\left[\boldsymbol{I} + \boldsymbol{E}(t)\right] \tag{47}$$

For quartic continuous-time matrix inversion:

$$\dot{\boldsymbol{W}}(t) = K\boldsymbol{W}(t)\boldsymbol{E}(t)\left[\boldsymbol{I} + \boldsymbol{E}(t)\left[\boldsymbol{I} + \boldsymbol{E}(t)\right]\right] \tag{48}$$

The gain K controls the convergence rate of the various methods, and its value is dependent on the available bandwidth of individual analogue amplifiers and multipliers. For time varying $\boldsymbol{X}$, this also has application in problems involving inverse kinematics. If any of the eigenvalues of $\boldsymbol{X}$ are negative (indicating a matrix that is not positive definite), then positive feedback occurs and the feedback loops become unstable. The stability of such systems can easily be achieved by using the Lyapunov method (see Appendix 2). Note that by substitution of the error matrix (45) into (46) we obtain a matrix Riccati equation and the other equation extends the matrix polynomials in a similar way to the scalar case to form a Riccati-Abel problem and so on. An alternative look at the problem is from the error matrix. Take (45) and differentiate with respect to time, noting that $\boldsymbol{X}$ is a constant matrix. This gives

$$\dot{\boldsymbol{E}}(t) = -\boldsymbol{X}\dot{\boldsymbol{W}}(t) \tag{49}$$

Substitute (46) into (49) and obtain for the quadratic convergence case

$$\dot{\boldsymbol{E}}(t) = -K\boldsymbol{X}\boldsymbol{W}(t)\boldsymbol{E}(t) \tag{50}$$

But since from (45) $\boldsymbol{X}\boldsymbol{W}(t) = \boldsymbol{I} - \boldsymbol{E}(t)$, we then obtain

$$\dot{\boldsymbol{E}}(t) = -K\left[\boldsymbol{I} - \boldsymbol{E}(t)\right]\boldsymbol{E}(t) \tag{51}$$

Or the error matrix Riccati equation

$$\dot{\boldsymbol{E}}(t) = -K\boldsymbol{E}(t) + K\boldsymbol{E}^2(t) \tag{52}$$

The stationary solutions for the error matrix are $\boldsymbol{E}^*(t) = 0$ and $\boldsymbol{E}^*(t) = \boldsymbol{I}$. This gives stationary output matrices as $\boldsymbol{W}^* = \boldsymbol{X}^{-1}$ and $\boldsymbol{W}^* = 0$. Of course, this can be extended to any order of convergence by using the previous formulae. Hence

For cubic continuous-time matrix inversion the error matrix Riccati-Abel equation is:

$$\dot{\boldsymbol{E}}(t) = -K\boldsymbol{E}(t) + K\boldsymbol{E}^3(t) \tag{53}$$

For quartic continuous-time matrix inversion the equation is:

$$\dot{\boldsymbol{E}}(t) = -K\boldsymbol{E}(t) + K\boldsymbol{E}^4(t) \tag{54}$$

With an increase in convergence order the stationary values of the error matrix also increases in number.

Simulation.

A simulation of a quadratic convergent analogue matrix inversion was performed in MATLAB Simulink with a symmetric positive definite matrix

$$\boldsymbol{X} = \begin{bmatrix} 2 & -1 & 0 \\ -1 & 2 & -1 \\ 0 & -1 & 2 \end{bmatrix} \tag{55}$$

Its inverse is

$$\boldsymbol{X}^{-1} = \begin{bmatrix} 0.75 & 0.5 & 0.25 \\ 0.5 & 1 & 0.5 \\ 0.25 & 0.5 & 0.75 \end{bmatrix} \tag{56}$$

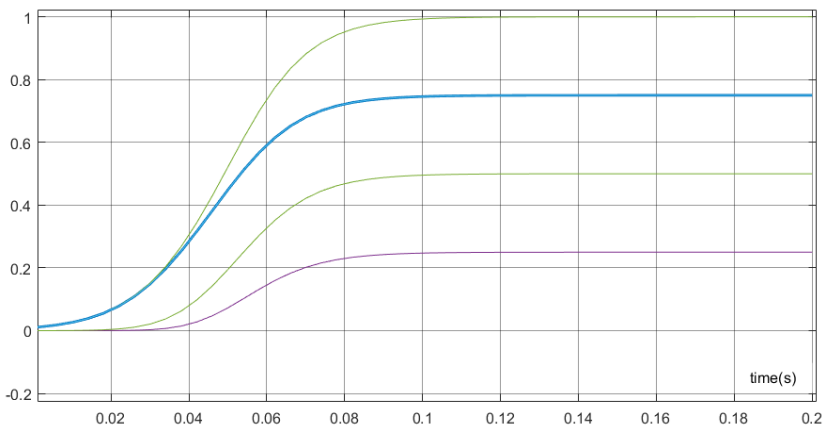

Figure 14. Convergence of matrix inverse values for Newton analogue 2nd order convergence.

The method of simulation in Simulink is shown in the block diagram of Figure 15 below.

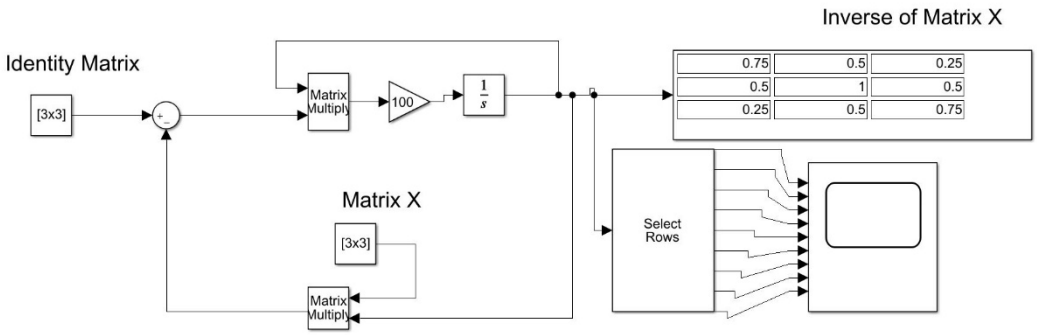

Figure 15. Inverse of Matrix X using Simulink. Continuous-time Newton's method.

The matrix of integrators are initialised at diag{0.01,0.01,0.01}. Increasing these values speeds up the convergence to steady state. If initialised at zero, then clearly the output stays at zero.

Conclusions

This paper has investigated the problem of inverting constant signals, numbers, or matrices using feedback control. The same theory applies to time-varying inputs provided the loop gain is high enough for the error norm to be small. The application to matrices is a new idea and is an interesting application of multivariable control theory. The stability and convergence of the various algorithms has been treated theoretically and with simulation results. The algorithm for matrix inversion is not particularly fast, but in terms of computation it only has one matrix multiplication per iteration loop with no divisions, making it suitable for some real-time applications, and is faster and less complex than steepest descent. Some new continuous time dividers defined by continuous time Newton and higher order convergent systems are also defined from their discrete time matrix counterparts. It is shown that Newton and higher-order convergent Newton type methods are governed by Riccati type equations.

Appendix 1 Continuous-time steepest descent

Examining (22), we can easily find an equivalent continuous-time circuit which performs the same division technique for a single input.

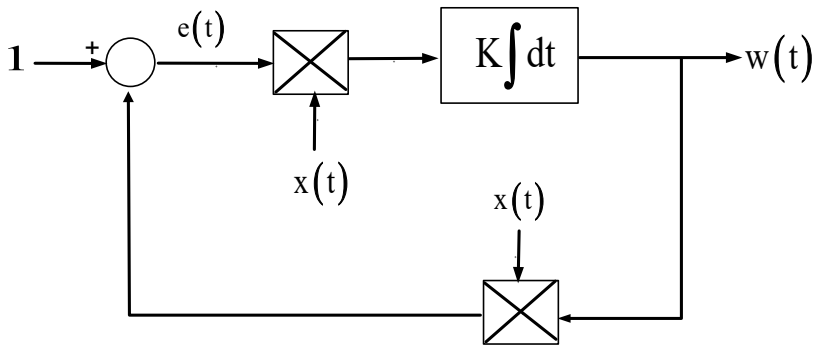

Figure A1. Steepest-descent continuous-time division

The differential equation describing the block diagram is

$$\frac{dw(t)}{dt} = Kx(t)\big(1 - w(t)x(t)\big) \tag{A1}$$

Assume $x(t)$ is a constant $x(t) = x$. In steady state, when $\frac{dw(t)}{dt} = 0$, assuming the closed-loop system is stable we have the equilibrium point

$$1 - w(t)x = 0$$

$$w^* = \frac{1}{x} \tag{A2}$$

So the circuit gives an output which is the reciprocal of *x.* To find the gain *K* for stability we write (A1) more generally

$$\frac{dw(t)}{dt} = g\big(w(t)\big) \tag{A3}$$

where $g\big(w(t)\big) = Kx(t)\big(1 - w(t)x(t)\big)$. Then classical stability analysis of a first-order differential equation tells us that for stability, the derivative[4]

$$\left.\frac{dg(w(t))}{dw}\right|_{w=w^*} < 0 \tag{A4}$$

giving

$$-x^2K < 0 \tag{A5}$$

So for stability of the closed-loop system we require K>0. This is in contrast with the system of Figure 1 which cannot take a sign change in x without changing the sign in K. Separating variables and solving (A1) we find for initial conditions $w(0) = w_0 \neq 0$.

$$w(t) = \frac{(w_0 x - b)e^{-Ktx^2} + 1}{x} \tag{A6}$$

We see from the solution that $\underset{lim t \to \infty}{w(t)} \to \frac{1}{x}$. Unlike equation (8), we see that if x is negative the closed-loop system is still stable.

Appendix 2. Stability of continuous time Newton matrix inversion.

Assume matrix $\boldsymbol{X}$>0. Then from equations (44) and (43)

$$\dot{\boldsymbol{W}}(t) = K\boldsymbol{W}(t)\left[\boldsymbol{I} - \boldsymbol{X}\boldsymbol{W}(t)\right] \tag{A7}$$

The equilibrium matrices are given by matrices when $\dot{\boldsymbol{W}}(t) = 0$ giving the null matrix $\boldsymbol{W}^* = 0$ and the inverse matrix $\boldsymbol{W}^* = \boldsymbol{X}^{-1}$.

Now from (A7) let

$$\boldsymbol{G}(\boldsymbol{W}(t)) = K\boldsymbol{W}(t) - K\boldsymbol{W}(t)\boldsymbol{X}\boldsymbol{W}(t) \tag{A8}$$

Differentiate as follows the matrix identity with respect to a matrix.

$$\frac{\partial \boldsymbol{G}(\boldsymbol{W}(t))}{\partial \boldsymbol{W}(t)} = \frac{\partial \boldsymbol{G}(\boldsymbol{W}(t))}{\partial \boldsymbol{W}(t)}\left[K\boldsymbol{W}(t) - K\boldsymbol{W}(t)\boldsymbol{X}\boldsymbol{W}(t)\right] \tag{A9}$$

This theory is now well established using the vec(.) method and Kronecker product of matrices [17, 37]. Using the product rule for matrix calculus we find

$$\frac{\partial \boldsymbol{G}(\boldsymbol{W}(t))}{\partial \boldsymbol{W}(t)} = K\left[\boldsymbol{I}_{n^2} - \left(\boldsymbol{W}^T\boldsymbol{X}^T \otimes \boldsymbol{I}_n\right) - \left(\boldsymbol{I}_n \otimes \boldsymbol{W}\boldsymbol{X}\right)\right]\Big|_{\boldsymbol{W}=\boldsymbol{W}^*} \tag{A10}$$

Substituting the equilibrium matrices and noting that $(\boldsymbol{I}_n \otimes \boldsymbol{I}_n) = \boldsymbol{I}_{n^2}$, for stability we must have negative real solutions for these derivatives. (i.e., negative definite matrices on the RHS when differentiated, or all eigenvalues must lie in the left half plane).

$\boldsymbol{W}^* = 0$

$$\frac{\partial \boldsymbol{G}(\boldsymbol{W}(t))}{\partial \boldsymbol{W}(t)} = K\boldsymbol{I}_{n^2} \tag{A11}$$

$\boldsymbol{W}^* = \boldsymbol{X}^{-1}$

$$\frac{\partial \boldsymbol{G}(\boldsymbol{W}(t))}{\partial \boldsymbol{W}(t)} = -K\boldsymbol{I}_{n^2} \tag{A12}$$

From the above we see that for the null matrix case the closed-loop system is unstable for positive K, but this condition is trivial. The second result of (A12) gives us a negative real solution provided the gain K is positive. Of some minor interest is when K is a matrix which we denote as $\boldsymbol{K}$ in bold. Equation (A7) becomes

$$\frac{d\boldsymbol{W}(t)}{dt} = \boldsymbol{K}\boldsymbol{W}(t)\left[\boldsymbol{I} - \boldsymbol{X}\boldsymbol{W}(t)\right] \tag{A13}$$

Going through the analysis for this case gives an alternative for (A12) as

$$\frac{\partial \boldsymbol{G}(\boldsymbol{W}(t))}{\partial \boldsymbol{W}(t)} = -(\boldsymbol{I}_n \otimes \boldsymbol{K}) \tag{A14}$$

This results in a stable closed-loop system for the stable equilibrium inverse provided $\boldsymbol{K}$ is positive definite. This can be used for weighting some elements for faster convergence than others though does not appear to have any immediate application.

References

[1] T. J. Moir, "A study on square root control-systems," *Journal of Computational and Applied Mathematics,* p. 113938, 2021/11/19/ 2021, doi: https://doi.org/10.1016/j.cam.2021.113938.

[2] D. Ghosh and D. Patranabis, "A simple analog divider having independent control of sensitivity and design conditions," *IEEE Transactions on Instrumentation and Measurement,* vol. 39, no. 3, pp. 522-526, 1990, doi: 10.1109/19.106285.

[3] E. Kettel and W. Schneider, "An Accurate Analog Multiplier and Divider," *IRE Transactions on Electronic Computers,* vol. EC-10, no. 2, pp. 269-272, 1961, doi: 10.1109/TEC.1961.5219198.

[4] H.T.Davis, *Introduction to Nonlinear Differential and Integral Equations*. New York: Dover Books on Mathematics, 1962.

[5] S. Elaydi, *An Introduction to Difference Equations*. New York: Springer-Verlag 2005.

[6] V.Pan and R.Schreiber, "An Improved Newton Iteration for the Generalized Inverse of a Matrix, with Applications," *SIAM Journal on Scientific and Statistical Computing,* vol. 12, no. 5, pp. 1109-1130, 1991.

[7] S.L.Miljkovic, "Iterative methods for computing inverses of matrices," Ph.D, Faculty of Natural Sciences and Mathematics, University of Nis, 2012.

[8] Y. Zhang and S.S.Ge, "Design and analysis of a general recurrent neural network model for time-varying matrix inversion," *IEEE Transactions on Neural Networks,* vol. 16, no. 6, pp. 1477-1490, 2005, doi: 10.1109/TNN.2005.857946.

[9] A. Bhaya and E. Kaszkurewicz, "A Control-Theoretic Approach to the Design of Zero Finding Numerical Methods," *IEEE Transactions on Automatic Control,* vol. 52, no. 6, pp. 1014-1026, 2007, doi: 10.1109/TAC.2007.899109.

[10] A. M. .Stuart and A. R. .Humphries, *Dynamical Systems and Numerical Analysis*. Cambridge UK: Cambridge university Press, 1998.

[11] Y. Z. .Tsypkin, *Adaption and learning in automatic systems* New York: Academic Press, 1971.

[12] A. Bhaya, P. A. Bliman, and F.Pazos, "Control-theoretic design of iterative methods for symmetric linear systems of equations," in *Proceedings of the 48h IEEE Conference*

on Decision and Control (CDC) held jointly with 2009 28th Chinese Control Conference, 15-18 Dec. 2009 2009, pp. 115-120, doi: 10.1109/CDC.2009.5399581.

[13] T. J. Moir, "Control systems approach to the sample inverse covariance matrix," *Journal of the Franklin Institute-Engineering and Applied Mathematics,* vol. 346, no. 3, pp. 237-252, 2009, doi: 10.1016/j.jfranklin.2008.08.007.

[14] K.B.Peterson and M.S.Pedersen, *The Matrix Cookbook*, 20081110 ed. Technical University of Denmark, 2008.

[15] J.E.Gentle, *Matrix algebra. Theory,Computations and applications in Statistics*. New York: Springer Verlag, 2007.

[16] D.S.G.Pollock, "Tensor products and matrix differential calculus," *Linear Algebra and its Applications,* vol. 67, pp. 169-193, 1985/06/01/ 1985, doi: https://doi.org/10.1016/0024-3795(85)90194-6.

[17] J. R. Magnus and H. Neudecker, *Matrix differential calculus with applications in statistics and economics.* New York: John Wiley and Sons, 1999.

[18] C. Guo and N. J. Higham, "A Schur–Newton Method for the Matrix pth Root and its Inverse," *SIAM Journal on Matrix Analysis and Applications,* vol. 28, no. 3, pp. 788-804, 2006, doi: 10.1137/050643374.

[19] J.L.Nazareth, "Conjugate gradient method," *Wiley Interdisciplinary Reviews: Computational Statistics,* vol. 1, no. 3, pp. 348-353, 2009, doi: doi:10.1002/wics.13.

[20] O.Guler, *Foundations of Optimization*. New York: Springer, 2010.

[21] G. Schulz, "Iterative Berechung der reziproken Matrix," *Zeitschrift fur Angewandte Mathematik und Mechanik,* vol. 13, no. 1, pp. 57-59, 1933.

[22] A. Ben-Israel "An iterative method for computing the generalized inverse of an arbitrary matrix," *Mathematics of Computation,* vol. 19, no. 91, pp. 452-455, 1965.

[23] V. Pan, F. Soleymani, and L. Zhao, "Highly Efficient Computation of Generalized Inverse of a Matrix," *arXiv:1604.07893v1[math.RA],* vol. https://arxiv.org/abs/1604.07893, 2016.

[24] W. Li and Z. Li, "A family of iterative methods for computing the approximate inverse of a square matrix and inner inverse of a non-square matrix," *Applied Mathematics and Computation,* vol. 215, no. 9, pp. 3433-3442, 2010/01/01/ 2010, doi: https://doi.org/10.1016/j.amc.2009.10.038.

[25] S. Hashima and O. Muta, "Fast matrix inversion methods based on Chebyshev and Newton iterations for zero forcing precoding in massive MIMO systems," *EURASIP Journal on Wireless Communications and Networking,* vol. 2020, no. 1, p. 34, 2020/02/04 2020, doi: 10.1186/s13638-019-1631-x.

[26] X. Wu, "A note on computational algorithm for the inverse of a square matrix," *Applied Mathematics and Computation,* vol. 187, no. 2, pp. 962-964, 2007/04/15/ 2007, doi: https://doi.org/10.1016/j.amc.2006.09.063.

[27] E. V. Krishnamurthy, "Economical Iterative and Range-Transformation Schemes for Division," *IEEE Transactions on Computers,* vol. C-20, no. 4, pp. 470-472, 1971, doi: 10.1109/T-C.1971.223270.

[28] S. K. Sen and S. S. Prabhu, "Optimal iterative schemes for computing the Moore-Penrose matrix inverse," *International Journal of Systems Science,* vol. 7, no. 8, pp. 847-852, 1976/08/01 1976, doi: 10.1080/00207727608941969.

[29] E.V.Krishnamurthy and S.K.Sen, *Numerical Algorithms - Computations in Science and Engineering*. New Delhi,India: Affiliated East-West Press, 1986.

[30] T. J. Moir and A. M. Pettigrew, "A Multiplicative Cancellation Approach to Multipath Suppression in FM Radio," *Wireless Personal Communications,* vol. 75, no. 2, pp. 799-819, 2014/03/01 2014, doi: 10.1007/s11277-013-1392-5.

[31] R. M. Yamaleev, "Representation of solutions of n-order Riccati equation via generalized trigonometric functions," *Journal of Mathematical Analysis and Applications,* vol. 420, no. 1, pp. 334-347, 2014/12/01/ 2014, doi: https://doi.org/10.1016/j.jmaa.2014.05.066.

[32] R.E.Kalman and R.S.Bucy, "New Results in Linear Filtering and Prediction Theory," *J.Basic Engineering Ser D (A.S.M.E),* vol. 83, pp. 95-108, 1961.

[33] R.M.Yamaleev, "Summation formula for solutions of Riccati-Abel equation," *arXiv:1210.2228 v1[math.RA],* 2012.

[34] R. H. Sturges, "Analog matrix inversion (robot kinematics)," *IEEE Journal on Robotics and Automation,* vol. 4, no. 2, pp. 157-162, 1988, doi: 10.1109/56.2079.

[35] Y. Zhang, "Revisit the Analog Computer and Gradient-Based Neural System for Matrix Inversion," in *Proceedings of the 2005 IEEE International Symposium on, Mediterrean Conference on Control and Automation Intelligent Control, 2005.*, 27-29 June 2005 2005, pp. 1411-1416, doi: 10.1109/.2005.1467221.

[36] G. Shi, B. D. O. Anderson, and U. Helmke, "Network Flows That Solve Linear Equations," *IEEE Transactions on Automatic Control,* vol. 62, no. 6, pp. 2659-2674, 2017, doi: 10.1109/TAC.2016.2612819.

[37] J. R. Magnus, "On the concept of matrix derivative," *Journal of Multivariate Analysis,* vol. 101, no. 9, pp. 2200-2206, 2010/10/01/ 2010, doi: https://doi.org/10.1016/j.jmva.2010.05.005.