Journal of Computational and Applied Mathematics 406 (2022) 113938

Contents lists available at ScienceDirect

Journal of Computational and Applied Mathematics

journal homepage: www.elsevier.com/locate/cam

A study on square root control-systems

T.J. Moir

School of Engineering, computer and mathematical sciences, Department of Electrical and electronic Engineering, Auckland University of Technology, St Paul Street, Auckland, New Zealand

ARTICLE INFO

Article history:
Received 31 March 2021
Received in revised form 15 September 2021

Keywords:
Linear algebra
Control systems
Square-root

ABSTRACT

Starting with the simplest case of an analogue square root control-system, we extend the idea to the discrete-time case and ultimately the multivariable discrete-time case. Several new results then emerge from the multivariable work. A nonlinear system is designed to take the square root of an arbitrary square matrix. The matrix can have real or complex values and an analysis of stability is reached by using matrix calculus and nonlinear theory. The root-locus of the multivariable system exhibits straight-line characteristics which has not been observed before and to achieve stability we introduce the concept of a complex step-size (or gain) in a recursive square root algorithm.

© 2021 Elsevier B.V. All rights reserved.

1. Introduction

In the field of electronics, it has been known for some 50 years that it is possible to create a circuit that provides the square root of an analogue signal. For example a CMOS solution is discussed in [1] with some of the history behind earlier methods. Despite this, the theory behind such circuits has never been analysed in any depth. In the continuous-time case, analogue circuit design engineers enable the square root of a number to be calculated by putting feedback around an amplifier which has a square term in the feedback path. In block diagram form this is shown in Fig. 1.

Define $x(t)$ as the input and $w(t)$ as the output. There is an error $e(t)$, like any control-system and a gain term K, whose value is to be determined. The operational amplifier is modelled as an analogue integrator. A more complex model could be used but no loss of generalisation is found by using this approach. The task is to find out what the output $w(t)$ becomes. By observation we can form the forced or nonhomogeneous differential equation

$$\frac{dw(t)}{dt} = K\left(x(t) - w^2(t)\right) \tag{1}$$

In steady state, from (1), when $\frac{dw(t)}{dt} = 0$, we have the two equilibrium solutions [2].

$$K\left(x(t) - w^2(t)\right) = 0$$

$$w^* = \pm\sqrt{x} \tag{2}$$

We must ensure that the input $x(t)$ is always positive. The circuit converges to either the positive or to the negative the square root of the input x. This it turns out is also true when x is time-varying, i.e., $x(t)$. To find the gain K for stability we write (1) more generally

$$\frac{dw(t)}{dt} = g(w(t)) \tag{3}$$

E-mail address: tom.moir@aut.ac.nz.

https://doi.org/10.1016/j.cam.2021.113938
0377-0427/© 2021 Elsevier B.V. All rights reserved.

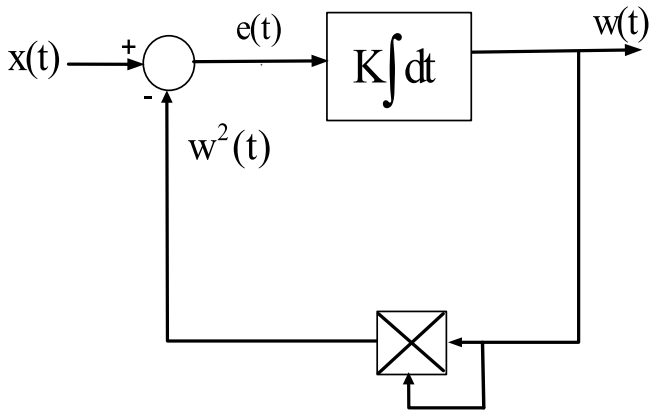

Fig. 1. Square root continuous-time block diagram.

where $g(w(t)) = K\left(x(t) - w^2(t)\right)$. Then classical stability analysis of a first-order differential Eq. (3) tells us that for stability, the derivative [2]

$$\left.\frac{dg(w(t))}{dw}\right|_{w=w^*} < 0 \tag{4}$$

Giving from (4)

$$-2w^*(t)K < 0 \tag{5}$$

This is the basic linearising method also known as the first or indirect method of Lyapunov. Substituting the two equilibrium values from (2) gives us K>0 when $w^* = \sqrt{x}$ and K<0 for $w^* = -\sqrt{x}$. For positive gain we obtain a positive square root and a negative square root if the gain is negative. The sign of the gain K determines the sign of the output square root.

When $x(t) = x > 0$, a positive constant input, we can re-write (1) as

$$\frac{dw(t)}{dt} = K\left(x - w^2(t)\right) \tag{6}$$

From (6) by separation of variables

$$\int \frac{dw(t)}{\left(x - w^2(t)\right)} = K\int dt \tag{7}$$

and we solve (7), a standard integral accordingly assuming K>0 *in the region* $-\sqrt{x} < w < \sqrt{x}$, for a proper integral

$$\left(\frac{1}{2\sqrt{x}}\right)\ln\left(-\frac{\left(w+\sqrt{x}\right)}{\left(w-\sqrt{x}\right)}\right) + C = Kt \tag{8}$$

And for zero initial conditions, $t = t_0 = 0$, $w = w_0 = 0$ we find $C = 0$. Then from (8) obtain

$$\left(\frac{1}{2}\right)\ln\left(-\frac{\left(w+\sqrt{x}\right)}{\left(w-\sqrt{x}\right)}\right) = tK\sqrt{x}$$

From which

$$\left(\frac{1}{2}\right)\ln\left(\frac{\left(1+\frac{w}{\sqrt{x}}\right)}{\left(1-\frac{w}{\sqrt{x}}\right)}\right) = tK\sqrt{x}$$

Which leads to the simpler closed solution

$$w = \sqrt{x}\tanh\left(Kt\sqrt{x}\right) \tag{9}$$

For large K or t we have from (9)

$$w \to \pm\sqrt{x} \tag{10}$$

Clearly convergence is assured for large gain K or asymptotically with time increasing. If the input x is time varying i.e. x (t), it is perhaps not obvious that a similar solution applies as (10). However, to draw this conclusion we must go to

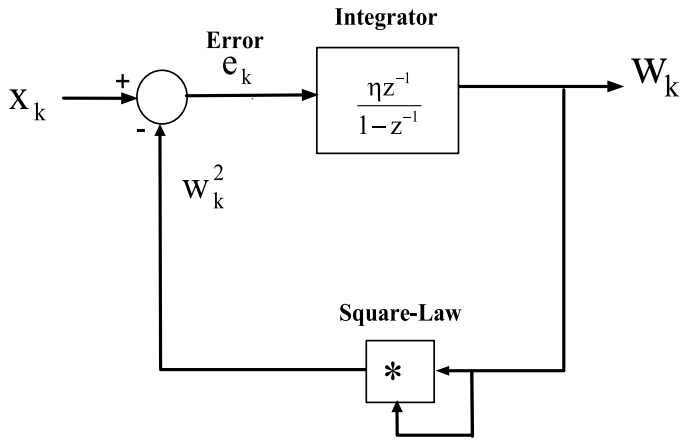

Fig. 2. Square root discrete-time block diagram.

control theory and consider the problem as a square law with negative feedback and an integrator in the forward path. For any such system, provided the gain is positive, the output converges to the square root of the input, *provided the loop gain is large enough at the frequency of the time-varying input.* For any stable control system, with an integrator in the forward path, provided the closed-loop system is stable, the error must converge asymptotically to zero and hence the output tracks the square root of the input. For the continuous-time case such a system is always stable provided the feedback is negative and not positive in nature. The tracking ability (ability to follow the square root) depends on the loop gain of the system. The higher the gain, the higher the bandwidth of the loop and the ability to track becomes better. The gain is in turn limited by amplifier bandwidth for an analogue system. Hence (10) will not be exact when x is time-varying but dependent on loop gain which makes the solution frequency dependent. At low frequencies the solution is more exact than high frequencies. *The solution will be close when the input is time-varying provided it varies at low frequencies relative to the bandwidth of the loop.*

This more general case when x is time-varying cannot be easily solved analytically. For example. Starting with (1), if we substitute $w = u'/u$ then differentiating w obtain (11)

$$\frac{dw(t)}{dt} = \frac{1}{u(t)}\frac{d^2u(t)}{dt^2} - \frac{1}{u^2(t)}\left(\frac{du(t)}{dt^2}\right)^2 \tag{11}$$

Substitute (11) into (1) and get

$$\frac{1}{u(t)}\frac{d^2u(t)}{dt^2} - \frac{1}{u^2(t)}\left(\frac{du(t)}{dt^2}\right)^2 (1-K) = Kx(t) \tag{12}$$

Then *only for* $K = 1$ Eq. (12) simplifies to

$$\frac{d^2u(t)}{dt^2} = u(t)x(t) \tag{13}$$

Eq. (13) is of the form of a one-dimension Schrödinger type equation which for general x(t) is considered unsolvable for the analytic case. However, the tracking ability can be deduced from elementary control theory as mentioned above.

2. The discrete-time scalar case.

The discrete-time case has the same basic structure as continuous-time though the equations are different.

Consider Fig. 2 when $x_k > 0$ and η is a small real gain. This is also referred to as the step-size in numerical algorithms but because of the control-system theme of the paper we will use the term *gain* throughout. Later in the paper we will also show that the gain can be possibly complex valued for the more general matrix problem. The recursive algorithm becomes the nonlinear *difference* equation of (14)

$$w_{k+1} = w_k - \eta w_k^2 + \eta x_k \tag{14}$$

Consider the case when the input is held constant $x_k = x$ The equilibrium points of (14) occur [3] when $w_{k+1} = w_k$ giving

$$w^* = \pm\sqrt{x} \tag{15}$$

Initially we consider the positive root in (15) only since the square root has two possible solutions.

$$\begin{aligned} w_{k+1} &= g_k \\ &= w_k - \eta w_k^2 + \eta x \end{aligned} \tag{16}$$

Using Lyapunov's first method as applied to discrete-time systems, the condition for asymptotic stability is that provided g_k is continuously differentiable at w* then

$$\left| \frac{d}{dw^*} g\left(w^*\right) \right|_{w^*=\sqrt{x}} < 1$$

Giving

$$\left|1 - 2\eta\sqrt{x}\right| < 1 \tag{17}$$

So that from (17), $0 < \eta < \frac{1}{\sqrt{x}}$. For positive and negative roots this gives the upper limit for limits on the gain as (18):

$$-\frac{1}{\sqrt{x}} < \eta < \frac{1}{\sqrt{x}} \tag{18}$$

As with the continuous-time case the algorithm, for a stable closed-loop system its output must converge to the positive square root when the gain is positive and the negative square root when the gain is negative. However, in this case there is an upper limit on the gain unlike the continuous-time case. Like the continuous-time case the solution will be close when the input is time-varying provided it varies at low frequencies relative to the bandwidth of the loop. Note also that the gain upper limit is determined as a function of the square root itself. Hence the square root must first be known before the theoretical gain upper limit can be found.

3. Matrix case

Finding the square root of a matrix with real elements is the natural extension to the discrete-time case. Our method uses negative feedback but previous methods have used more direct approaches, e.g. the Schur decomposition [4,5] or Newton's method and others [6–8]. An n-square matrix $\mathbf{X}$ has a spectral decomposition $\mathbf{X} = \mathbf{U}\boldsymbol{\Lambda}\mathbf{U}^{-1}$, where $\boldsymbol{\Lambda}$ is the diagonal matrix of eigenvalues and $\mathbf{U}$ is a matrix whose columns are eigenvectors of corresponding eigenvalues of $\mathbf{X}$. Then its square root is given by $\mathbf{X}^{\frac{1}{2}} = \mathbf{U}\boldsymbol{\Lambda}^{\frac{1}{2}}\mathbf{U}^{-1}$. This is easily verified by multiplying $\mathbf{X}^{\frac{1}{2}}\mathbf{X}^{\frac{1}{2}} = \mathbf{U}\boldsymbol{\Lambda}^{\frac{1}{2}}\mathbf{U}^{-1}\mathbf{U}\boldsymbol{\Lambda}^{\frac{1}{2}}\mathbf{U}^{-1} = \mathbf{X}$. The matrix $\boldsymbol{\Lambda}^{\frac{1}{2}}$ is a diagonal matrix of square roots of eigenvalues. Because each eigenvalue has two possible square roots, an n dimensional matrix must have 2^n possible square roots. When both eigenvalues are chosen to be positive, we consider the matrix to be classified as the principal square root. Not all matrices have square roots, however. For example the matrix $\mathbf{X} = \begin{bmatrix} 0 & 1 \\ 0 & 0 \end{bmatrix}$ has two eigenvalues which are zero and so its square root does not exist [9]. This special case is not very realistic though since it corresponds to a matrix with characteristic polynomial which is just a constant. The square root of a matrix finds application in the unscented Kalman filter [10], the generalised eigenvalue problem [11] and Convolution Neural-Networks [12].

3.1. Symmetric matrix case

We first consider the case of symmetric matrices. A symmetric matrix will have real eigenvalues. Consider the matrix form of (14) where $\mathbf{X} = \mathbf{X}^{\mathbf{T}}$ is an n- square symmetric full-rank matrix whose square root is to be determined.

$$\mathbf{W_{k+1}} = \mathbf{W_k} - \eta\mathbf{W_k}\mathbf{W_k^T} + \eta\mathbf{X} \tag{19}$$

From (19), provided the closed-loop system is stable, we find in steady-state

$$\mathbf{W^*} = \mathbf{W}* - \eta\mathbf{W} * \mathbf{W}*^{\mathbf{T}} + \eta\mathbf{X} \tag{20}$$

Then obtain from (20)

$$\mathbf{X} = \mathbf{W^*}\mathbf{W^{*T}} \tag{21}$$

But since $\mathbf{W^*}$ is the output, we must have two equilibrium matrices. We use the star notation in (20) and (21) to denote equilibrium matrix. *Note that the star notation should not be confused with the conjugate matrix which is often used elsewhere*. The matrix (22)

$$\mathbf{W}^* = \pm\mathbf{X}^{\frac{1}{2}} \tag{22}$$

is the square root of the matrix. The sign of the converged matrix will be the same as the sign of the gain η.

The stability range of the algorithm is found by differentiating the right-hand side of (19) with respect to the matrix **W**. This is an extension of Lyapunov's stability criterion. However, differentiating a matrix expression with respect to a matrix expression requires a special matrix calculus which is nevertheless well established though often miss-represented with previous incorrect results. There are a few matrix calculus versions, but some have been previously invalidated due to inappropriate matrix notations for derivatives [13]. The one used here uses the Vec() method [14–17] of converting matrices to stacked vectors and deriving results this way. This is considered definitive in the area. Although the basic matrix calculus results are first derived in stacked vector format, the results are presented in matrix format. First write

$$\mathbf{W_{k+1}} = \mathbf{G_k}(\mathbf{W_k})$$

$$\mathbf{G_k}(\mathbf{W_k}) = \mathbf{W_k} - \eta \mathbf{W_k}\mathbf{W_k^T} + \eta \mathbf{X}$$

Then using the results from Appendix A *and provided* $\mathbf{W_k}$ *is symmetric*

$$\left.\frac{\partial \mathbf{G_k}(\mathbf{W_k})}{\partial \mathbf{W_k}}\right|_{\mathbf{W}=\mathbf{W}^*} = \mathbf{M}$$

$$= \mathbf{I}_{n^2} - \eta(\mathbf{I}_{n^2} + \mathbf{T}_{nn})(\mathbf{W}^* \otimes \mathbf{I}_n)$$

When differentiating a matrix with respect to a matrix, we obtain a solution which is n squared in dimension. **M** is therefore a matrix expression composed of matrices of dimension n squared. We use the notation that $\otimes$ is the Kronecker matrix product. The commutation matrix $\mathbf{T}_{nn} = \sum_{i=1}^{n}\sum_{j=1}^{n} \mathbf{E}_{ij} \otimes \mathbf{E}_{ji}$ and the $\mathbf{E}_{ij}$ matrices are elementary matrices of order n defined as a matrix which has unity in the (i,j) element and is zero elsewhere. For example, when $n = 2$, the commutation matrix is of order 4. For stability and hence convergence, the gain must be chosen so that the eigenvalues of

$$\mathbf{M} = \mathbf{I}_{n^2} - \eta(\mathbf{I}_{n^2} + \mathbf{T}_{nn})(\mathbf{W}^* \otimes \mathbf{I}_n) \tag{23}$$

have magnitude less than unity. By substituting $\mathbf{W}^* = -\mathbf{W}^*$ in (23) the problem is symmetric, so that for negative gain $\eta < 0$, the maximum gain is the same but negative. As with the scalar case the limit on the gain depends on the converged square root solution $\mathbf{W}^*$ or $-\mathbf{W}^*$. However, for a symmetric matrix there are elements in this matrix which are duplicated and hence the problem is over-parameterised. This does not present a problem but does give rise to eigenvalues being returned as unity. For an n dimensional symmetric matrix there are only $n(n+1)/2$ unique elements leaving $n(n-1)/2$ eigenvalues returned as unity. For example, for $n = 2$ there are 3 unique eigenvalues and 1 returned as unity. For $n = 3$ there are 6 unique eigenvalues and 3 returned as unity. As an interesting note, we can say that the above method is not the only way to find stability limits, and methods using linear matrix inequalities (LMI) [18–21] could also be used as an alternative. However, the limiting gain value will ultimately also be found as an eigenvalue problem.

3.2. Positive definite or negative definite matrices.

Consider a *positive definite* or *positive semi-definite* matrix **X**. Usually such matrices are taken as symmetric, but here we use a looser description that for such a matrix to be positive definite requires $\mathrm{Re}\left(\mathbf{z}^\dagger \mathbf{X}\mathbf{z}\right) \geq 0$ for all non-zero complex vectors **z** and $\mathbf{z}^\dagger$ is the conjugate vector. This enables non-symmetric matrices to be classified in this way.

The square root algorithm is modified to become

$$\mathbf{W}_{k+1} = \mathbf{W}_k - \eta \mathbf{W}_k^2 + \eta \mathbf{X} \tag{24}$$

If the closed-loop system is stable, in steady-state (24) becomes

$$\mathbf{W^*} = \mathbf{W^*} - \eta \mathbf{W^{*2}} + \eta \mathbf{X}$$

and

$$\mathbf{X^*} = \mathbf{W^2}$$

This results in two equilibrium points as the principal roots of **X**

$$\mathbf{W}^* = \pm \mathbf{X}^{\frac{1}{2}}$$

The sign of the converged matrix will be the same as the sign of the gain η.

Applying matrix calculus, we find that for stability and hence convergence, the gain $\eta > 0$ must be chosen so that the magnitude of the eigenvalues of

$$\mathbf{M} = \mathbf{I}_{n^2} - \eta\left[(\mathbf{W^{*T}} \otimes \mathbf{I}_n) + (\mathbf{I}_n \otimes \mathbf{W}^*)\right] \tag{25}$$

are less than unity. By substituting $\mathbf{W}^* = -\mathbf{W}^*$ in (25) the problem is symmetric, so that for negative gain $\eta < 0$ the maximum gain is the same value but negative. Maximum gain for the special case of positive real eigenvalues can also be found theoretically since (25) includes a Kronecker sum (Appendix B), but the solution involves the reciprocal maximum eigenvalue of the square root of the matrix **X**.

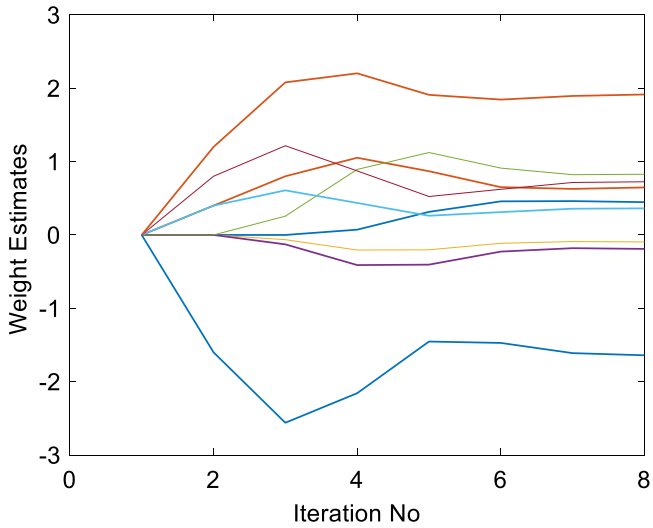

Fig. 3. $\eta = 0.4$ showing square root convergence of matrix elements.

For recursive matrix algorithms of this type (for example (19) and (24)) we require a stopping criterion. This can be achieved by checking that the Frobenius norm $\|\mathbf{X} - \mathbf{W}_k\mathbf{W}_k\|_F < \delta$, where δ is a small value, say 0.01 in all the following examples. The number of iterations k is recorded when stopping. The Frobenius norm is not essential to this algorithm of course, any distance measure can be used.

Illustrative Example: Convergence of the square root of a matrix.

Consider a companion matrix of order 3. $\mathbf{X} = \begin{pmatrix} 0 & 1 & 0 \\ 0 & 0 & 1 \\ 2 & -4 & 3 \end{pmatrix}$. Its eigenvalues are $\lambda_1 = 1, \lambda_2 = 1 + \mathrm{i}, \lambda_3 = 1 - \mathrm{i}$.

Taking initially a gain of $\eta = 0.4$, the square root algorithm converges after 9 iterations to: $\mathbf{W}_9 = \mathbf{W}* = \begin{pmatrix} 0.4462 & 0.6525 & -0.0987 \\ -0.1974 & 0.8410 & 0.3564 \\ 0.7128 & -1.6230 & 1.9102 \end{pmatrix}$. Fig. 3 shows the convergence of all 9 elements of the square root. Its eigenvalues were found to be $\lambda_1 = 1, \lambda_2 = 1.0994 + 0.4551\mathrm{i}, \lambda_3 = 1.0994 - 0.4551\mathrm{i}$ which are the square roots of the eigenvalues of $\mathbf{X}$. Evaluating the 9th order matrix $\mathbf{M} = \mathbf{I}_{n^2} - \eta\left[(\mathbf{W}^{*\mathbf{T}} \otimes \mathbf{I}_n) + (\mathbf{I}_n \otimes \mathbf{W}^*)\right]$ yields a maximum value of gain which just puts the eigenvalues on the unit circle as $\eta_{\max} = 0.7769$. Fig. 4 shows the effect on the stability when $\eta = 0.76$, close to instability. The matrix estimate oscillates and takes longer to converge, hence validating the conditions for stability. The results are very similar to the step response of a multivariable LTI system when it is on the verge of instability. In this case there are as many step inputs (of different values) as are matrix elements.

The square root of a matrix has the block diagram as shown in Fig. 5. It has the familiar look of a control system with negative feedback with a square law in the feedback path. The difference is that everything is matrix rather than scalar or vector based as in other control-system work.

4. General case: Matrices with positive and negative eigenvalues or complex elements.

Consider a lower triangular matrix of order 4. $\mathbf{X} = \begin{pmatrix} 1 & 0 & 0 & 0 \\ 2 & -2 & 0 & 0 \\ 3 & 2 & -3 & 0 \\ 5 & 3 & 2 & 4 \end{pmatrix}$. A lower triangular matrix has eigenvalues which are easy to spot as they are its diagonal entries. Its eigenvalues are therefore $\lambda_1 = 1, \lambda_2 = -2, \lambda_3 = -3, \lambda_4 = 4$. The matrix is neither positive or negative definite. This more general case is easily solved by using a slight modification to the algorithm. Namely, *we make the gain complex.* This is an entirely novel approach for such problems. Taking a gain

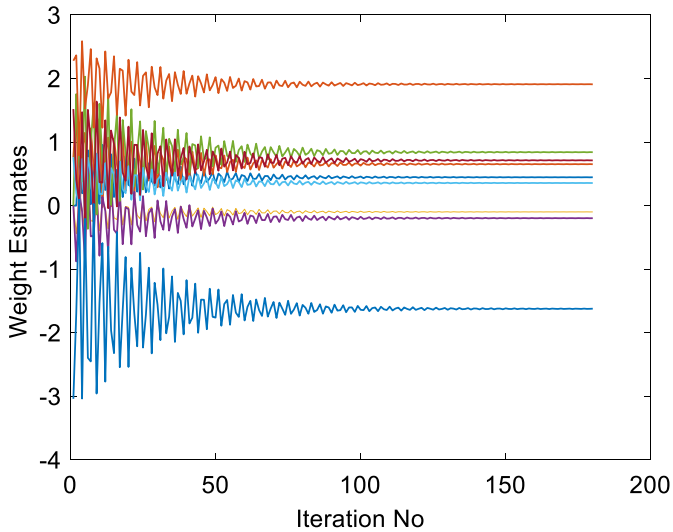

Fig. 4. $\eta = 0.76$ showing oscillating square root convergence of matrix elements.

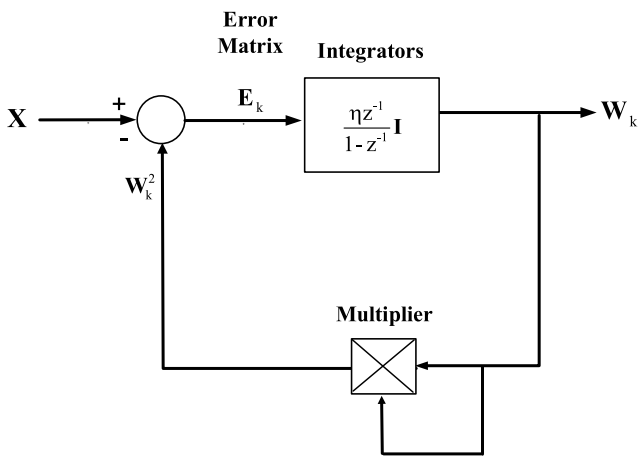

Fig. 5. Block diagram for square root of a matrix.

of $\eta = 0.2 + 0.2\mathrm{i}$, the square root algorithm converges after 44 iterations to be the complex matrix:

$$\mathbf{W}_{44} = \mathbf{W}^* = \begin{pmatrix} 1 & 0 & 0 & 0 \\ 0.667 + 0.9428\mathrm{i} & -1.4142\mathrm{i} & 0 & 0 \\ 1.0833 + 1.4526\mathrm{i} & 0.6357\mathrm{i} & -1.7320\mathrm{i} & 0 \\ 1.6411 - 0.9752\mathrm{i} & 1.1900 + 0.6604\mathrm{i} & 0.5712 + 0.4950\mathrm{i} & 1.9993 + 0.0004\mathrm{i} \end{pmatrix}.$$

The eigenvalues of $\mathbf{W}^*$ are $\lambda_1 = 1$, $\lambda_2 = -1.412i$, $\lambda_3 = -1.7321i$, $\lambda_4 = 2$. By making the gain $\eta = 0.2 - 0.2\mathrm{i}$ we get the complex conjugate solution.

4.1. Stability of the square root algorithm with complex gain

The algorithm is the same, namely

$$\mathbf{W}_{k+1} = \mathbf{W}_k - \eta \mathbf{W}_k^2 + \eta \mathbf{X} \tag{26}$$

but here in (26) the gain can be represented as $\eta = \alpha + \mathrm{i}\beta$ and the matrix $\mathbf{W} = \mathbf{A} + \mathrm{i}\mathbf{B}$, dropping the time index for clarity. The analysis is not rigorous but nevertheless has been verified with simulation. $\mathbf{X}$ is like a setpoint matrix in a multivariable nonlinear control-loop. Complex-valued step size methodology has been used in other areas [22] and is

known to extend the search space. We define the matrix function

$$\mathbf{G}_k(\mathbf{W}_k) = \mathbf{W}_k - \eta\mathbf{W}_k^2 + \eta\mathbf{X} \tag{27}$$

and need to find the matrix $\mathbf{M}$ whose eigenvalues must have magnitude less than unit using matrix calculus, where from (27) by differentiation we obtain (28).

$$\left.\frac{\partial \mathbf{G}_k(\mathbf{W}_k)}{\partial \mathbf{W}_k}\right|_{\mathbf{W}=\mathbf{A}+\mathrm{i}\mathbf{B}} = \mathbf{M} \tag{28}$$

In the following analysis we note from (26) that $\mathbf{X}$ vanishes after differentiation and therefore it can be a real or complex matrix without losing any generality in these equations.

However, since the matrix $\mathbf{W}$ is a complex matrix, we are differentiating with respect to a complex matrix. Differentiating on the complex-plane requires the *Cauchy–Riemann* conditions to be satisfied [23]. If

$$\mathbf{G}_k(\mathbf{W}_k)|_{\mathbf{W}=\mathbf{A}+\mathrm{i}\mathbf{B}} = \mathbf{U} + \mathrm{i}\mathbf{V} \tag{29}$$

By direct substitution of the complex step size $\eta = \alpha + \mathrm{i}\beta$ and $\mathbf{W}$, we obtain the matrices of (29) to be

$$\begin{aligned} \mathbf{U} &= \mathbf{A} + \alpha\mathbf{X} - \alpha\left(\mathbf{A}^2 - \mathbf{B}^2\right) + \beta\left(\mathbf{AB} + \mathbf{BA}\right) \\ \mathbf{V} &= \left[\mathbf{B} - \alpha\left(\mathbf{AB} + \mathbf{BA}\right)\right] + \beta\mathbf{X} - \beta\left(\mathbf{A}^2 - \mathbf{B}^2\right) \end{aligned} \tag{30}$$

Recall the matrix equalities for (30) must satisfy [24]

$$\begin{aligned} \frac{\partial \mathbf{U}}{\partial \mathbf{A}} &= \frac{\partial \mathbf{V}}{\partial \mathbf{B}} \\ \frac{\partial \mathbf{V}}{\partial \mathbf{A}} &= -\frac{\partial \mathbf{U}}{\partial \mathbf{B}} \end{aligned} \tag{31}$$

Eqs. (31) are in direct analogy to the scalar Cauchy–Riemann case. The matrix expression if satisfied, is then holomorphic and its complex differential is given as (32) .

$$\left.\frac{\partial \mathbf{G}_k(\mathbf{W}_k)}{\partial \mathbf{W}_k}\right|_{\mathbf{W}=\mathbf{A}+\mathrm{i}\mathbf{B}} = \frac{\partial \mathbf{U}}{\partial \mathbf{A}} + \mathrm{i}\frac{\partial \mathbf{V}}{\partial \mathbf{A}} \tag{32}$$

Evaluating all four matrix derivatives of (31) using the rules of matrix calculus

$$\begin{aligned} \frac{\partial \mathbf{U}}{\partial \mathbf{A}} &= \mathbf{I}_{n^2} - \alpha\left[\mathbf{A}^{\mathrm{T}} \otimes \mathbf{I}_n + \mathbf{I}_n \otimes \mathbf{A}\right] + \beta\left[\mathbf{B}^{\mathrm{T}} \otimes \mathbf{I}_n + \mathbf{I}_n \otimes \mathbf{B}\right] \\ &= \frac{\partial \mathbf{V}}{\partial \mathbf{B}} \end{aligned} \tag{33}$$

$$\begin{aligned} \frac{\partial \mathbf{V}}{\partial \mathbf{A}} &= -\alpha\left[\mathbf{B}^{\mathrm{T}} \otimes \mathbf{I}_n + \mathbf{I}_n \otimes \mathbf{B}\right] - \beta\left[\mathbf{A}^{\mathrm{T}} \otimes \mathbf{I}_n + \mathbf{I}_n \otimes \mathbf{A}\right] \\ &= -\frac{\partial \mathbf{U}}{\partial \mathbf{B}} \end{aligned} \tag{34}$$

we find from (33) and (34) that the conditions are satisfied and the complex derivative matrix for the general case exists everywhere on the complex plane and is given by (35).

$$\begin{aligned} \mathbf{M} &= \frac{\partial \mathbf{U}}{\partial \mathbf{A}} + \mathrm{i}\frac{\partial \mathbf{V}}{\partial \mathbf{A}} \\ &= \mathbf{I}_{n^2} - \alpha\left[\mathbf{A}^{\mathrm{T}} \otimes \mathbf{I}_n + \mathbf{I}_n \otimes \mathbf{A}\right] + \beta\left[\mathbf{B}^{\mathrm{T}} \otimes \mathbf{I}_n + \mathbf{I}_n \otimes \mathbf{B}\right] \\ &\quad -\mathrm{i}\alpha\left[\mathbf{B}^{\mathrm{T}} \otimes \mathbf{I}_n + \mathbf{I}_n \otimes \mathbf{B}\right] - \mathrm{i}\beta\left[\mathbf{A}^{\mathrm{T}} \otimes \mathbf{I}_n + \mathbf{I}_n \otimes \mathbf{A}\right] \end{aligned} \tag{35}$$

Hence by substituting the calculated square root matrix $\mathbf{W}^* = \mathbf{X}^{\frac{1}{2}} = \mathbf{A} + \mathrm{i}\mathbf{B}$ into (35) we can find the limits of $\eta = \alpha + \mathrm{i}\beta$so that its absolute eigenvalues lie within the unit circle. We assume here that $\alpha = \beta$ and increase the values from zero to find the limiting case.

For example, the companion matrix $\mathbf{X} = \begin{pmatrix} 0 & 1 & 0 & 0 \\ 0 & 0 & 1 & 0 \\ 0 & 0 & 0 & 1 \\ -1 & -2 & -3 & 4 \end{pmatrix}$ has two eigenvalues with negative real parts and two with positive real parts. $\lambda_1 = 2.2712 + 0.3406\mathrm{i}$, $\lambda_2 = 2.2712 - 0.3406\mathrm{i}$, $\lambda_3 = -0.2712 + 0.3406\mathrm{i}$, $\lambda_4 = -0.2712 - 0.3406\mathrm{i}$

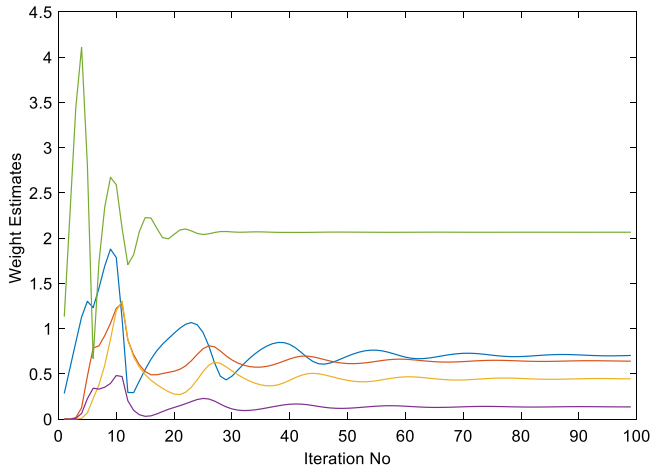

Fig. 6. $\eta = 0.2 + 0.2\mathrm{i}$ showing oscillating square root convergence of absolute values of matrix elements W(1,2), W(1,2),W(2,1),W(2,2),W(4,4).

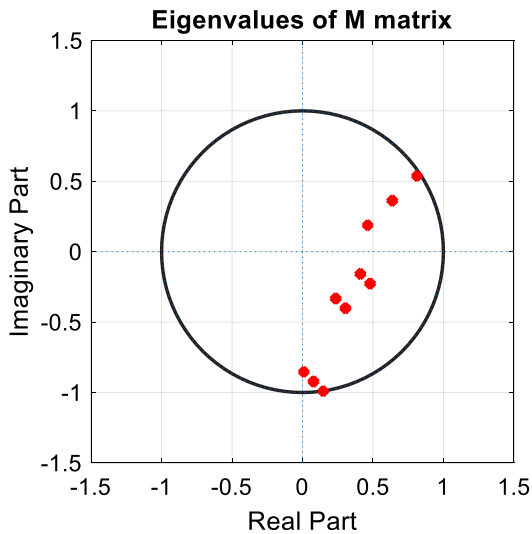

Fig. 7. $\eta = 0.305 + 0.305\mathrm{i}$ showing border of stability, eigenvalues on unit circle.

For a complex gain of $\eta = 0.2 + 0.2\mathrm{i}$ the square root algorithm converges after 100 iterations to

$$\mathbf{W}^*_{100} = \begin{pmatrix} 0.0969 - 0.4319\mathrm{i} & 0.2541 + 0.6567\mathrm{i} & 0.4321 - 0.3271\mathrm{i} & -0.1228 + 0.0540\mathrm{i} \\ 0.1228 - 0.0540\mathrm{i} & 0.3425 - 0.5399\mathrm{i} & 0.6225 + 0.4947\mathrm{i} & -0.0591 - 0.1112\mathrm{i} \\ 0.0591 + 0.1112\mathrm{i} & 0.2410 + 0.1684\mathrm{i} & 0.5197 - 0.2064\mathrm{i} & 0.3862 + 0.0501\mathrm{i} \\ -0.3862 - 0.0501\mathrm{i} & -0.7133 + 0.0110\mathrm{i} & -0.9176 + 0.0181\mathrm{i} & 2.0644 - 0.0061\mathrm{i} \end{pmatrix}$$

The maximum gain was found as $\eta = 0.3050 + 0.3050\mathrm{i}$. The eigenvalues of the square root matrix were found to be $\lambda_1 = 1.5113 + 0.1127\mathrm{i}$, $\lambda_2 = 1.5113 - 0.1127\mathrm{i}$, $\lambda_3 = 0.2865 - 0.5944\mathrm{i}$, $\lambda_4 = -0.2865 - 0.5944\mathrm{i}$. For the gain used in the simulation, it is quite high and already the estimates are beginning to oscillate before settling. See Fig. 6 which shows a small selection of the 16 estimates.

For maximum gain a plot of all the eigenvalues are shown in Fig. 7. Some are repeated eigenvalues but two are on the unit circle verifying the stability criterion.

Only ten eigenvalues are shown since six more are repeated roots. We note that unlike a linear system the eigenvalues do not necessarily appear in conjugate pairs. For zero gain the open-loop system is a collection of 16 integrators and so the open-loop eigenvalues are at unity. They then drift to the left in straight lines, some overlapping until one reaches the end of the unit circle. This is illustrated in Fig. 8 and is the multivariable root locus.

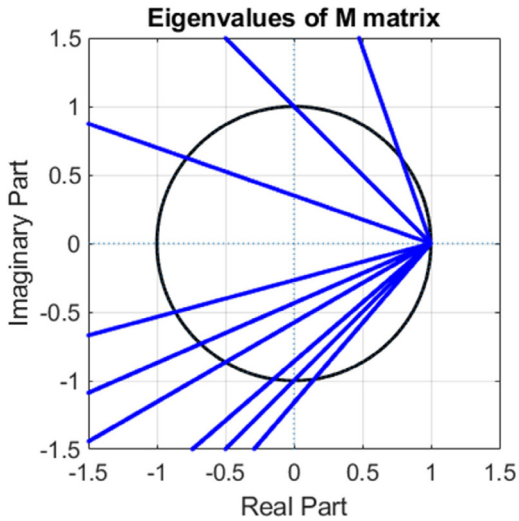

Fig. 8. Multivariable root locus of closed-loop eigenvalues as complex gain increases.

Even for linear systems, multivariable root loci can overlap but the complex plane is thought of as being a Riemann surface with cuts so that there are essentially several "sheets' of the complex plane on top of one another connected via branch-points [25]. The straight-line loci were observed for any random matrix chosen, only the angles of the lines change and their number. The straight lines are most likely not a general phenomenon but we can conjecture that they may be curved if in future it is possible to use polynomial matrices instead of a matrix.

5. Gradient descent method

We can treat the method of gradient descent as a control system. Consider first the scalar case. Defining an error between setpoint x_k and the square root w_k as (36)

$$e_k = x_k - w_k^2 \tag{36}$$

Consider the case when the input is held constant $x_k = x$. Define a cost function

$$J = \frac{1}{4} e_k^2 \tag{37}$$

The quarter fraction does not lose generality in the solution. Find the gradient of (37) as

$$\frac{\partial J}{\partial w_k} = -w_k e_k \tag{38}$$

Update the weight using a gain η in the direction of steepest descent according to (39).

$$w_{k+1} = w_k - \eta \frac{\partial J}{\partial w_k} \tag{39}$$

Given an update as

$$w_{k+1} = w_k + \eta w_k e_k \tag{40}$$

we can find the limits on stability for a given gain by writing (40) as

$$\begin{aligned} w_{k+1} &= g_k \\ &= w_k + \eta w_k \left(x - w_k^2\right) \end{aligned} \tag{41}$$

In steady state the equilibrium points of (41) are

$$w^* = \pm\sqrt{x} \tag{42}$$

The condition for asymptotic stability is that provided g_k is continuously differentiable at w^* then $\left|\frac{d}{dw^*} g\left(w^*\right)\right|_{w^*=\sqrt{x}} < 1$

This results in

$$\left|1+\eta x-3\eta w_k^2\right|<1 \tag{43}$$

For positive or negative gain, (43) gives the stability limits as

$$-\frac{1}{x}<\eta<\frac{1}{x} \tag{44}$$

Now (44) differs slightly from the basic control case of (18). The interesting thing about this approach is that it inherently can cope with complex inputs.

Now extend this to the matrix case by defining the following scalar cost function in terms of the setpoint matrix $\mathbf{X}$ and its estimated (possibly complex) square root matrix $\mathbf{W}_k$.

$$J=\left\|\mathbf{X}-\mathbf{W}_k^2\right\|_F^2=\frac{1}{2}\mathrm{tr}\left[\mathbf{X}-\mathbf{W}_k^2\right]\left[\mathbf{X}-\mathbf{W}_k^2\right]^T \tag{45}$$

Then expanding (45) and differentiating the trace of the matrix expression with respect to the matrix $\mathbf{W}_k$ [26] gives the gradient matrix (46).

$$\nabla_{\mathbf{W}}=-\left[\mathbf{W}_k\mathbf{X}^T+\mathbf{X}^T\mathbf{W}_k\right]^T+\left[\mathbf{W}_k{}^T\mathbf{W}_k^2+\mathbf{W}_k^2\mathbf{W}_k^T\right] \tag{46}$$

and the gradient descent estimate becomes

$$\mathbf{W}_{k+1}=\mathbf{W}_k-\eta\nabla_{\mathbf{W}} \tag{47}$$

where η is a real positive gain. Substitute (46) into (47) and get

$$\mathbf{W}_{k+1}=\mathbf{W}_k+\eta\left[\mathbf{W}_k\mathbf{X}^T+\mathbf{X}^T\mathbf{W}_k\right]^T-\eta\left[\mathbf{W}_k{}^T\mathbf{W}_k^2+\mathbf{W}_k^2\mathbf{W}_k^T\right] \tag{48}$$

After further simplification of (48) obtain the matrix square root gradient descent algorithm.

$$\mathbf{W}_{k+1}=\mathbf{W}_k+\eta\left[\left(\mathbf{X}-\mathbf{W}_k^2\right)\mathbf{W}_k^T+\mathbf{W}_k^T\left(\mathbf{X}-\mathbf{W}_k^2\right)\right] \tag{49}$$

Eq. (49) is more complicated than the feedback method in the previous section but has only a real valued gain. The equilibrium points of this matrix occur when $\mathbf{W}_{k+1}=\mathbf{W}_k=\mathbf{W}^*$, which as in previous algorithms is satisfied when $\mathbf{X}=\mathbf{W}^{*2}$ or $\mathbf{W}^*=\pm\mathbf{X}^{\frac{1}{2}}$, giving the square root of the matrix $\mathbf{X}$. Eq. (49) also appears in [27] for the symmetric matrix case. We can derive a matrix to plot the roots of the closed-loop system just as with the ordinary feedback method. This is done by writing $\mathbf{W}$ as a complex matrix and checking that it satisfies the matrix *Cauchy–Riemann* equations (Appendix C). We can then calculate the maximum value of loop gain for a given matrix. The results are illustrated with the following example.

Comparison example

Consider the matrix considered in [28].

$$\mathbf{X}=\begin{bmatrix}2&3&1&5\\0&2&5&-3\\-1&2&3&0\\2&4&-2&1\end{bmatrix}\text{ which has eigenvalues }\lambda=5.119\pm2.39i,\ -1.119\pm2.393i$$

Examining the gradient-descent algorithm of (49) we see it has 3 matrix multiplication per iteration, whereas Eq. (26) for the feedback method only has one matrix multiplication. This single matrix multiplication could be complex however if the gain is complex. Taking the steepest descent method first, the maximum gain before instability was found to be $\eta=0.066$. It converged in 152 iterations.

The converged square root matrix for steepest descent was the real matrix:

$$\mathbf{W}_{152}^*=\begin{bmatrix}1.275&0.0942&0.9014&1.7204\\0.2889&1.7738&0.9570&-1.1722\\-0.4103&0.4295&1.8323&0.3624\\0.4166&1.3518&-1.0993&1.5054\end{bmatrix}$$

Use the norm measure $e_n=\left\|\left[\mathbf{X}-\mathbf{W}_k^2\right]\right\|_F/\left\|[\mathbf{X}]\right\|_F$ to determine how close the estimate is to the true value. For this case $e_{152}=1.183.10^{-5}$. The eigenvalues of $\mathbf{W}$ were found to be $\lambda=2.3206\pm0.5157i,\ 0.8727\pm1.3714i,\ 0.8727$

The feedback method converged in 642 steps with a complex gain of $\eta=0.07+0.07i$. The maximum gain before instability was found to be $\eta=0.095+0.095i$ and it took 642 steps to converge to an error norm of $e_{642}=1.3431.10^{-5}$.

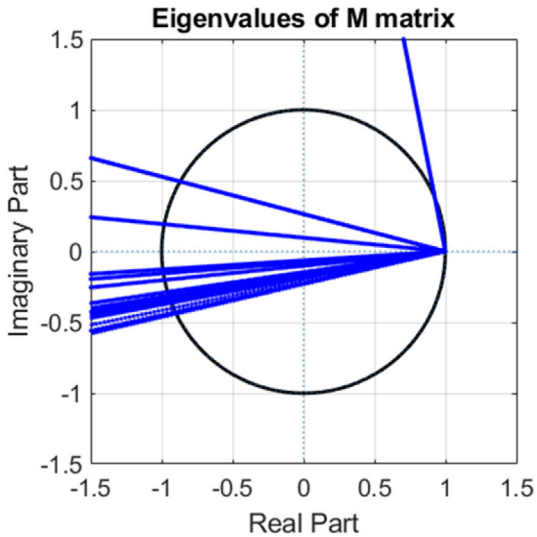

Fig. 9. Multivariable root locus of closed-loop eigenvalues as gain increases, steepest descent method.

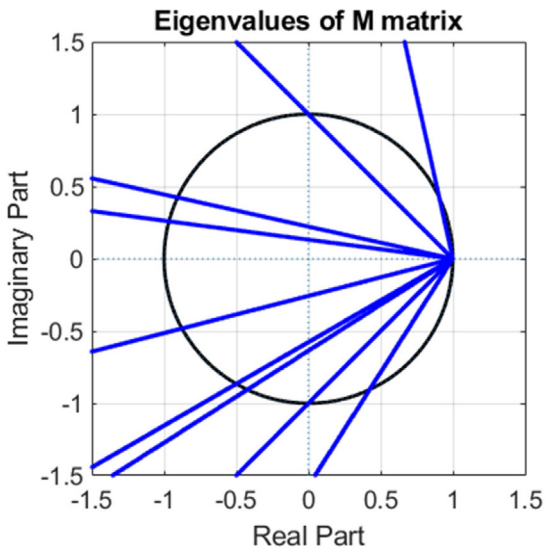

Fig. 10. Multivariable root locus of closed-loop eigenvalues as gain increases, feedback method.

The converged square root matrix for steepest descent was the complex matrix:

$$\mathbf{W}^*_{642} = \begin{bmatrix} 1.5372 & 1.4499 & -0.8958 & 1.3592 \\ -0.1472 & 1.0482 & 1.8678 & -0.4285 \\ -0.0520 & 0.8299 & 1.3499 & -0.2669 \\ 0.8216 & 0.8565 & -0.3562 & 0.7059 \end{bmatrix} + \mathrm{i} \begin{bmatrix} -0.7905 & 0.0101 & -0.1503 & 1.4715 \\ 0.3275 & -0.5116 & 0.7519 & -0.6568 \\ -0.1427 & 0.4836 & -0.6818 & 0.3105 \\ 0.4507 & 0.8530 & -1.0814 & -0.7589 \end{bmatrix}$$

The multivariable root locus of the steepest descent and feedback method are shown in Figs. 9 and 10.

Although at first sight it would appear that the feedback method is much slower than the steepest-descent method, it should be pointed out that if a real gain is used, i.e. $\eta = 0.07$ instead of $\eta = 0.07 + 0.07\mathrm{i}$, that convergence was achieved in 113 steps to a real matrix. This was the same matrix as given by the steepest descent method above. The error norm was $\mathrm{e}_{113} = 1.171.10^{-5}$. If an imaginary gain is used of $\eta = 0.07\mathrm{i}$ is used, then convergence is much slower in 715 steps

to the purely imaginary matrix:

$$\mathbf{W}^*_{715} = \mathrm{i}\begin{bmatrix} -1.2838 & 1.5702 & 3.1778 & 0.5263 \\ -0.6190 & -1.2173 & 1.5841 & -1.5407 \\ -0.8619 & 0.0188 & 0.0578 & -0.3790 \\ 0.1187 & 1.6485 & 0.7765 & -1.3310 \end{bmatrix}$$

with error norm $e_{715} = 1.265.10^{-5}$. All of the feedback solutions had eigenvalues of $\mathbf{W}$ given by $\lambda = 2.3206 \pm 0.5157\mathrm{i}, -0.8727 - 1.3714\mathrm{i}, 0.8727 - 1.3714\mathrm{i}$. Note that the last two are not conjugate pairs. They are still valid however since any sign combination can be used of the square root of the original eigenvalues of $\mathbf{X}$. Since we have a matrix of dimension 4, these three solutions given here are possibly only three of 16 possible square root matrices.

6. Some further observations

6.1. Some notes on the Newton method.

Perhaps the most common method in use in such approaches is the Newton method. It can be written in the commonly met form [29] as (50).

$$\mathbf{W}_{k+1} = \frac{1}{2}\left(\mathbf{W}_k + \mathbf{W}_k^{-1}\mathbf{X}\right) \tag{50}$$

The Newton method provided it converges gives quadratic convergence, and therefore could be the best choice. Using $\mathbf{W}_0 = \mathbf{X}$ as initial conditions ensures (50) converges quadratically to the square root provided $\mathbf{X}$ is positive definite. However, it can be seen from (50) that a matrix inversion is required at each iteration to accomplish this. Careful choice of initial conditions is required to give guaranteed convergence. It is interesting to note that (50) can also be written as (51), in terms of negative feedback thus

$$\mathbf{W}_{k+1} = \mathbf{W}_k + \frac{1}{2}\left(\mathbf{W}_k^{-1}\mathbf{X} - \mathbf{W}_k\right) \tag{51}$$

Unfortunately, the Newton method has poor numerical stability and is not suitable for practical computation [30].

6.2. Link between Riccati equations, spectral-factorisation and this method

Finding the square root of a matrix is a special case of the multivariable spectral-factorisation problem. In fact the problem has already been solved using feedback in a previous paper by the author [31]. For example, for a vector of arbitrary noise-sources $\mathbf{s}_k$, it can be defined as having a z-transfer function spectral-matrix

$$\boldsymbol{\Phi}_{ss}(z) = \boldsymbol{\Lambda}_s(z^{-1})\boldsymbol{\Lambda}_s^T(z) \tag{52}$$

where in (52) $\boldsymbol{\Lambda}_s(z^{-1})$ is a strictly minimum-phase stable spectral factor transfer-function matrix. Such problems arise in optimal filtering and multivariable control. However, the spectral factor is not unique, but can be made unique by defining a unique spectral factor $\mathbf{Z}_s(z^{-1})$ satisfying [32]

$$\boldsymbol{\Phi}_{ss}(z) = \mathbf{Z}_s(z^{-1})\mathbf{R}_\varepsilon\mathbf{Z}_s^T(z) \tag{53}$$

Where in (53)

$$\boldsymbol{\Lambda}_s = \mathbf{Z}_s\mathbf{R}_\varepsilon^{\frac{1}{2}} \tag{54}$$

and $\mathbf{Z}_s(0) = \mathbf{I}$. Here $\mathbf{R}_\varepsilon$ is the covariance matrix of a vector of measurement noise. We can see immediately that the square root of this matrix occurs in the spectral factor. This occurs in this degenerate case when the spectral-matrix is a constant and not a function of the z-transform operator. This would happen if the noise vector was white. Hence a square root algorithm is a special case of spectral factorisation.

However, since spectral-factorisation also has an equivalence in state-variable based-methods (Kalman filters), in the form of a matrix Riccati equation [33,34], it follows that there must be a link between the two approaches which has yet not been explored. The most general form of a scalar Riccati equation is given by [35]

$$\frac{dy}{dt} = P(t) + Q(t) + R(t)\,y^2 \tag{55}$$

and we can see by comparing (55) with Eq. (1), re-written below as Eq. (56)

$$\frac{dw(t)}{dt} = Kx(t) - Kw^2(t) \tag{56}$$

that Eq. (1) is a Riccati equation too.

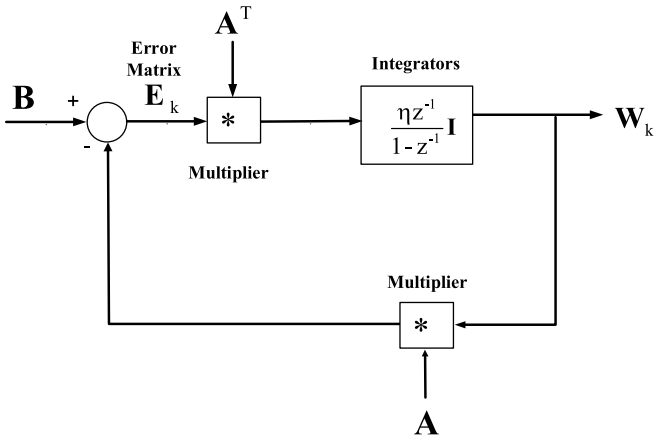

Fig. 11. Solution of **AX=B** for **X** as a multivariable control system with matrix setpoint.

6.3. A further application of the feedback method: Solution of *AX=B* for *X*

This method requires a matrix inverse to find the matrix solution to **AX=B** where **A**,**B** are known n-square matrices and matrix **X** is to be found. It is assumed that **A** is non-singular. By far the fastest method is to use the Newton method for matrix inversion [36], but it is of some theoretical importance to show this example using negative feedback instead. In Fig. 11, **B** is a setpoint matrix and **X** is the solution to the matrix equation and is shown as the output to the system.

Writing the difference equation in terms of constant matrices, we have for Fig. 11

$$\mathbf{W}_{k+1} = \mathbf{W}_k + \eta \mathbf{A}^T (\mathbf{B} - \mathbf{A}\mathbf{W}_k) \tag{57}$$

Where in (57) $\eta > 0$ is the constant gain. Under equilibrium we must have $\mathbf{W}_{k+1} = \mathbf{W}_k$ and the equilibrium matrix becomes the solution matrix $\mathbf{W}^* = \mathbf{A}^{-1}\mathbf{B}$. If (57) can be maintained stable, then the output of the multivariable system must be the solution we require. To find the limit of the step-size on stability we form the Jacobi matrix of a matrix function in the same way as the square root method, namely

$$\mathbf{W}_{k+1} = \mathbf{G}_k(\mathbf{W}_k) \tag{58}$$

Where in (58)

$$\mathbf{G}_k(\mathbf{W}_k) = \mathbf{W}_k + \eta \mathbf{A}^T\mathbf{B} - \eta \mathbf{A}^T\mathbf{A}\mathbf{W}_k \tag{59}$$

Then differentiating (59) results in the matrix **M**

$$\left.\frac{\partial \mathbf{G}_k(\mathbf{W}_k)}{\partial \mathbf{W}_k}\right|_{\mathbf{W}=\mathbf{W}^*} = \mathbf{M} = \mathbf{I}_{n^2} - \eta(\mathbf{I}_n \otimes \mathbf{A}^T\mathbf{A}) \tag{60}$$

The eigenvalues of **M** in (60) determine the stability. We require them to have magnitude less than unity. Since $\mathbf{I}_{n^2} \otimes \mathbf{A}^T\mathbf{A} = \mathbf{A}^T\mathbf{A}.\mathrm{diag}\{1, 1, 1 \ldots 1\}$, then **M** is a block diagonal matrix. Therefore, its eigenvalues must be those of $\mathbf{I}_n - \eta\mathbf{A}^T\mathbf{A}$ repeated n times.

The eigenvalues λ and eigenvectors $\boldsymbol{v}$ of a matrix **X** are found from

$$\mathbf{X}\boldsymbol{v} = \lambda \boldsymbol{v}$$

Now if $\mathbf{X} = \left(\mathbf{I} - \eta\mathbf{A}^T\mathbf{A}\right)$, then by definition

$$\begin{aligned}\mathbf{X}\boldsymbol{v} &= \left(\mathbf{I} - \eta\mathbf{A}^T\mathbf{A}\right)\boldsymbol{v} \\ &= \boldsymbol{v} - \eta\mathbf{A}^T\mathbf{A}\boldsymbol{v} \\ &= (1 - \eta\lambda)\,\boldsymbol{v}\end{aligned}$$

(the eigenvalue shift technique). So that the eigenvalues of $\left(\mathbf{I} - \eta\mathbf{A}^T\mathbf{A}\right)$ are $1 - \eta\lambda_i, i = 1, 2 \ldots n$, where λ_i are the positive real eigenvalues of $\mathbf{A}^T\mathbf{A}$. We therefore require $|1 - \eta\lambda_{max}| < 1$, where λ_{max} is the maximum eigenvalue of $\mathbf{A}^T\mathbf{A}$. Furthermore, $\mathbf{A}^T\mathbf{A}$ is a symmetric matrix and must have real eigenvalues and are also the singular values of **A**. Therefore, the condition for stability is that the step-size is in the range given by (61)

$$0 < \eta < \frac{2}{\sigma_{max}^2} \tag{61}$$

Table A.1
Results for matrix calculus. Matrix **G** is m square.

Function	Matrix differential
$\mathbf{G}$	$\frac{\partial \mathbf{G}}{\partial \mathbf{G}} = \mathbf{I}_{n^2}$
$\mathbf{GA}$	$\frac{\partial \mathbf{GA}}{\partial \mathbf{G}} = \mathbf{A}^{\mathrm{T}} \otimes \mathbf{I}_{\mathrm{m}}$
$\mathbf{G}^{\mathrm{T}}$	$\frac{\partial \mathbf{G}^{\mathrm{T}}}{\partial \mathbf{G}} = (\mathbf{I}_{\mathrm{n}} \otimes \mathbf{I}_{\mathrm{n}})\mathbf{T}_{\mathrm{nn}} = \mathbf{T}_{\mathrm{nn}}$
$\mathbf{AG}^{\mathrm{T}}$	$\frac{\partial \mathbf{AG}^{T}}{\partial \mathbf{G}} = (\mathbf{I}_{\mathrm{n}} \otimes \mathbf{A})\mathbf{T}_{\mathrm{nn}}$
$\mathbf{AG}$	$\frac{\partial \mathbf{AG}}{\partial \mathbf{G}} = \mathbf{I}_{\mathrm{n}} \otimes \mathbf{A}$
$\mathbf{G}^2$	$\frac{\partial \mathbf{G}^2}{\partial \mathbf{G}} = \mathbf{G}^{\mathrm{T}} \otimes \mathbf{I}_{\mathrm{n}} + \mathbf{I}_{\mathrm{n}} \otimes \mathbf{G}$
$\mathbf{AGB}$	$\frac{\partial \mathbf{AGB}}{\partial \mathbf{G}} = \mathbf{B}^{\mathrm{T}} \otimes \mathbf{A}$
$\mathbf{G}^{\mathrm{T}}\mathbf{AG}$	$\frac{\partial \mathbf{G}^{\mathrm{T}}\mathbf{AG}}{\partial \mathbf{G}} = (\mathbf{G}^{\mathrm{T}}\mathbf{A}^{\mathrm{T}} \otimes \mathbf{I}_{\mathrm{n}})\mathbf{T}_{\mathrm{nn}} + (\mathbf{I}_{\mathrm{n}} \otimes \mathbf{G}^{\mathrm{T}}\mathbf{A})$
$\mathbf{GAG}^{\mathrm{T}}$	$\frac{\partial \mathbf{GAG}^{\mathrm{T}}}{\partial \mathbf{G}} = (\mathbf{GA}^{\mathrm{T}} \otimes \mathbf{I}_{\mathrm{n}}) + (\mathbf{I}_{\mathrm{n}} \otimes \mathbf{GA})\mathbf{T}_{\mathrm{nn}}$
$\mathbf{G}^{\mathrm{T}}\mathbf{G}$	$\frac{\partial \mathbf{G}^{\mathrm{T}}\mathbf{G}}{\partial \mathbf{G}} = \left(\mathbf{G}^{\mathrm{T}} \otimes \mathbf{I}_{\mathrm{n}}\right)\mathbf{T}_{\mathrm{nn}} + \left(\mathbf{I}_{\mathrm{n}} \otimes \mathbf{G}^{\mathrm{T}}\right)$
$\mathbf{G}^{\mathrm{T}}\mathbf{A}$	$\frac{\partial \mathbf{G}^{\mathrm{T}}\mathbf{A}}{\partial \mathbf{G}} = \left(\mathbf{A}^{\mathrm{T}} \otimes \mathbf{I}_{\mathrm{n}}\right)\mathbf{T}_{\mathrm{nn}}$

with $\sigma_{\max}$ as the maximum singular value of **A**. Because practically we may not wish to calculate the singular values, we can use $\mathrm{tr}\left[\mathbf{A}^{\mathrm{T}}\mathbf{A}\right]$ as a rough upper limit approximation in (61) resulting in the approximation of (62).

$$0 < \eta < \frac{2}{\mathrm{tr}\left[\mathbf{A}^{\mathrm{T}}\mathbf{A}\right]} \tag{62}$$

7. Conclusion

A study on the square root type family of algorithms has revealed some new and interesting results. The scalar cases are first analysed in continuous and discrete time. Then the multivariable problem is solved for different matrix types. The general case of square root of an arbitrary square matrix can be found by extending the gain of a recursive algorithm to being complex. A multivariable analysis of this non-linear system yields interesting stability patterns where the eigenvalues have straight line behaviour.

Acknowledgements

I would like to thank Dr J.F Barrett for helpful comments on this paper and several anonymous reviewers.

Appendix A. Some standard matrix calculus results

If Vec(**A**) represents a vector of stacked columns of the matrix **A** then the following common Vec(.) result is used in the paper

$$\mathrm{Vec}(\mathbf{ABC}) = (\mathbf{C}^{\mathrm{T}} \otimes \mathbf{A})\mathbf{Vec}(\mathbf{B})$$

From this, we can work in vectors and use established vector calculus results. Then, when differentiating a matrix expression with respect to another matrix, the following table of common results are well established [15,37].

The commutation matrix [38] $\mathbf{T}_{\mathrm{nn}} = \sum_{\mathrm{i}=1}^{\mathrm{n}} \sum_{\mathrm{j}=1}^{\mathrm{n}} \mathbf{E}_{\mathrm{ij}} \otimes \mathbf{E}_{\mathrm{ji}}$ and the $\mathbf{E}_{\mathrm{ij}}$ matrices are elementary matrices of order n defined as a matrix which has unity in the (i, j) element and is zero elsewhere. For example, when n = 3, the commutation matrix is of order 9. And

$$\mathbf{T}_{33} = \begin{bmatrix} 1 & 0 & 0 & 0 & 0 & 0 & 0 & 0 & 0 \\ 0 & 0 & 0 & 1 & 0 & 0 & 0 & 0 & 0 \\ 0 & 0 & 0 & 0 & 0 & 0 & 1 & 0 & 0 \\ 0 & 1 & 0 & 0 & 0 & 0 & 0 & 0 & 0 \\ 0 & 0 & 0 & 0 & 1 & 0 & 0 & 0 & 0 \\ 0 & 0 & 0 & 0 & 0 & 0 & 0 & 1 & 0 \\ 0 & 0 & 1 & 0 & 0 & 0 & 0 & 0 & 0 \\ 0 & 0 & 0 & 0 & 0 & 1 & 0 & 0 & 0 \\ 0 & 0 & 0 & 0 & 0 & 0 & 0 & 0 & 1 \end{bmatrix}$$

The communication matrix is a special form of permutation matrix with the following properties

$$\mathrm{Vec}(\mathbf{G}^{\mathbf{T}}) = \mathbf{T}_{\mathrm{nn}}\mathrm{Vec}(\mathbf{G})$$

$$(\mathbf{I}_{\mathrm{n}} \otimes \mathbf{GA})\mathbf{T}_{\mathrm{nn}} = \mathbf{T}_{\mathrm{nn}}(\mathbf{GA} \otimes \mathbf{I}_{\mathrm{n}})$$

$$\mathbf{T}_{\mathrm{nn}}^{-1} = \mathbf{T}_{\mathrm{nn}}^{\mathrm{T}} = \mathbf{T}_{\mathrm{nn}}$$

Appendix B. To find maximum step size in terms of eigenvalues.

To find the maximum gain for the square root of matrix with positive real eigenvalues, we require a result for eigenvalues of the Kronecker sum [39].

$$\mathbf{A} \oplus \mathbf{B} = (\mathbf{A} \otimes \mathbf{I}_{\mathrm{n}}) + (\mathbf{B} \otimes \mathbf{I}_{\mathrm{n}})$$

Here we restrict the problem to two matrices of the same dimension since this is the problem developed in the paper. Then any eigenvalue of $\mathbf{A} \oplus \mathbf{B}$ arises as the *combination of sums* of the individual eigenvalues of $\mathbf{A}$ and $\mathbf{B}$. Hence in the case where $\mathbf{B} = \mathbf{A}^{\mathrm{T}}$, they must share the same eigenvalues. Therefore, the *maximum eigenvalue* of the Kronecker sum of $\mathbf{A} \oplus \mathbf{A}^{\mathrm{T}}$ is twice the maximum eigenvalue of $\mathbf{A}$.

Apply this to Eq. (25)

$$\mathbf{M} = \mathbf{I}_{\mathrm{n}^2} - \eta\left[(\mathbf{W}^{*^{\mathbf{T}}} \otimes \mathbf{I}_{\mathrm{n}}) + (\mathbf{I}_{\mathrm{n}} \otimes \mathbf{W}^{*})\right]$$
$$= \mathbf{I}_{\mathrm{n}^2} - \eta\left(\mathbf{W}^{*\mathrm{T}} \oplus \mathbf{W}^{*}\right)$$

where the equilibrium matrix is $\mathbf{W}^{*} = \mathbf{X}^{\frac{1}{2}}$. Furthermore, if $\mathbf{X}^{\frac{1}{2}}$ has maximum eigenvalue $\lambda_{\max}$, the maximum eigenvalue of their Kronecker sum $\left[(\mathbf{X}^{\frac{1}{2}^{\mathbf{T}}} \otimes \mathbf{I}_{\mathrm{n}}) + (\mathbf{I}_{\mathrm{n}} \otimes \mathbf{X}^{\frac{1}{2}})\right]$ is therefore $2\lambda_{\max}$. However, any maximum eigenvalue of $\mathbf{X}^{\frac{1}{2}}$ is also the maximum eigenvalue of the square root of the maximum eigenvalue of $\mathbf{X}$. If we denote the maximum eigenvalue of $\mathbf{X}$ as $\mu_{\max}$, then $\lambda_{\max} = \sqrt{\mu_{\max}}$. Therefore, from $\mathbf{M}$ using the eigenvalue shift technique [40], the limit on the gain assuming the eigenvalues of $\mathbf{X}$ are positive real can be found from the following:

$$\left|1 - 2\eta\sqrt{\mu_{\mathbf{max}}}\right| < 1$$

Giving for positive gain

$$0 < \eta < \frac{1}{\sqrt{\mu_{\mathbf{max}}}}$$

However, as with the scalar case we require knowledge of the square root itself before we can find the limiting value.

As an example, consider the lower triangular matrix $\mathbf{X} = \begin{bmatrix} 1 & 0 & 0 \\ 4 & 4 & 0 \\ 7 & 8 & 16 \end{bmatrix}$ which by inspection has eigenvalues 1, 4 and 16. The reciprocal square root of the maximum eigenvalue is therefore $\frac{1}{4} = 0.25$. This is also the maximum gain. With this value of gain the loop is still stable and the square root algorithm converges in about 10 samples to $\mathbf{X}^{\frac{1}{2}} = \begin{bmatrix} 1 & 0 & 0 \\ 1.333 & 2 & 0 \\ 1.04941 & 1.3333 & 4 \end{bmatrix}$. Raising the gain to 0.26 gives oscillatory values.

Appendix C. Cauchy Riemann conditions, gradient descent case.

The square root gradient descent algorithm is found from (49)

$$\mathbf{W}_{\mathrm{k+1}} = \mathbf{W}_{\mathrm{k}} + \eta\left[\left(\mathbf{X} - \mathbf{W}_{\mathrm{k}}^{2}\right)\mathbf{W}_{\mathrm{k}}^{\mathrm{T}} + \mathbf{W}_{\mathrm{k}}^{\mathrm{T}}\left(\mathbf{X} - \mathbf{W}_{\mathrm{k}}^{2}\right)\right]$$

First write

$$\mathbf{W}_{\mathrm{k+1}} = \mathbf{G}_{\mathrm{k}}(\mathbf{W}_{\mathrm{k}})$$

where

$$\mathbf{G}_{\mathrm{k}}(\mathbf{W}_{\mathrm{k}}) = \mathbf{W}_{\mathrm{k}} + \eta\left[\left(\mathbf{X} - \mathbf{W}_{\mathrm{k}}^{2}\right)\mathbf{W}_{\mathrm{k}}^{\mathrm{T}} + \mathbf{W}_{\mathrm{k}}^{\mathrm{T}}\left(\mathbf{X} - \mathbf{W}_{\mathrm{k}}^{2}\right)\right]$$

Substitute $\mathbf{W} = \mathbf{W}^{*} = \mathbf{A} + \mathrm{i}\mathbf{B}$ as a complex matrix and assume η and $\mathbf{X}$ are real. Now

$$\mathbf{G}_{\mathrm{k}}(\mathbf{W}_{\mathrm{k}}) = \mathbf{U} + \mathrm{i}\mathbf{V}$$

with

$$\mathbf{U} = \mathbf{A} + \eta\left[\mathbf{X}\mathbf{A}^{\mathbf{T}} + \mathbf{A}^{\mathbf{T}}\mathbf{X} - \left(\mathbf{A}^{\mathbf{2}} - \mathbf{B}^{\mathbf{2}}\right)\mathbf{A}^{\mathrm{T}} - \mathbf{A}^{\mathrm{T}}\left(\mathbf{A}^{\mathbf{2}} - \mathbf{B}^{\mathbf{2}}\right) + (\mathbf{AB} + \mathbf{BA})\,\mathbf{B}^{\mathrm{T}} + \mathbf{B}^{\mathrm{T}}\,(\mathbf{AB} + \mathbf{BA})\right]$$
$$\mathbf{V} = \mathbf{B} + \eta\left[\mathbf{X}\mathbf{B}^{\mathbf{T}} + \mathbf{B}^{\mathbf{T}}\mathbf{X} - \left(\mathbf{A}^{\mathbf{2}} - \mathbf{B}^{\mathbf{2}}\right)\mathbf{B}^{\mathrm{T}} - \mathbf{B}^{\mathrm{T}}\left(\mathbf{A}^{\mathbf{2}} - \mathbf{B}^{\mathbf{2}}\right) - (\mathbf{AB} + \mathbf{BA})\,\mathbf{A}^{\mathrm{T}} + \mathbf{A}^{\mathrm{T}}\,(\mathbf{AB} + \mathbf{BA})\right]$$

then we must have the matrix equalities [24] to satisfy the matrix Cauchy–Riemann conditions

$$\frac{\partial \mathbf{U}}{\partial \mathbf{A}} = \frac{\partial \mathbf{V}}{\partial \mathbf{B}}$$
$$\frac{\partial \mathbf{V}}{\partial \mathbf{A}} = -\frac{\partial \mathbf{U}}{\partial \mathbf{B}}$$

Now differentiate term by term using Table A.1 However, in doing so we require the product rule for matrix calculus

$$\mathbf{Df}(\mathbf{x})\mathbf{g}(\mathbf{x}) = (\mathbf{g}(\mathbf{x})^{\mathbf{T}} \otimes \mathbf{I_m})\mathbf{f}'(\mathbf{x}) + (\mathbf{I_m} \otimes \mathbf{f}(\mathbf{x}))\mathbf{g}'(\mathbf{x})$$

There are ten terms in each differential. After considerable matrix algebra we arrive at

$$\begin{aligned}
\frac{\partial \mathbf{U}}{\partial \mathbf{A}} &= \mathbf{I}_{n^2} + \eta\left[(\mathbf{I}_n \otimes \mathbf{X})\,\mathbf{T}_{nn} + \left(\mathbf{X}^{\mathrm{T}} \otimes \mathbf{I}_n\right)\mathbf{T}_{nn} - \left((\mathbf{A} \otimes \mathbf{I}_n) + \left(\mathbf{I}_n \otimes \mathbf{A}^{\mathrm{T}}\right)\right)\left(\mathbf{A}^{\mathrm{T}} \otimes \mathbf{I}_n + \mathbf{I}_n \otimes \mathbf{A}\right)\right.\\
&- \left(\left(\mathbf{I}_n \otimes \mathbf{A}^{2}\right) - \left(\mathbf{I}_n \otimes \mathbf{B}^{2}\right) + \left(\mathbf{A}^{2\mathrm{T}} \otimes \mathbf{I}_n\right) - \left(\mathbf{B}^{2\mathrm{T}} \otimes \mathbf{I}_n\right)\right)\mathbf{T}_{nn}\\
&\left.+ \left(\mathbf{B}\mathbf{B}^{\mathrm{T}} \otimes \mathbf{I}_n\right) + (\mathbf{B} \otimes \mathbf{B}) + \left(\mathbf{I}_n \otimes \mathbf{B}\mathbf{B}^{\mathrm{T}}\right) + \left(\mathbf{B}^{\mathrm{T}} \otimes \mathbf{B}^{\mathrm{T}}\right)\right]\\
&= \frac{\partial \mathbf{V}}{\partial \mathbf{B}}
\end{aligned}$$

$$\begin{aligned}
\frac{\partial \mathbf{V}}{\partial \mathbf{A}} &= \eta\left[-\left(\mathbf{A}\mathbf{B}^{\mathrm{T}} \otimes \mathbf{I}_n\right) - (\mathbf{I}_n \otimes \mathbf{AB})\,\mathbf{T}_{nn} - (\mathbf{A} \otimes \mathbf{I}_n)\,(\mathbf{I}_n \otimes \mathbf{B}) - (\mathbf{I}_n \otimes \mathbf{BA})\,\mathbf{T}_{nn}\right.\\
&- (\mathbf{B} \otimes \mathbf{I}_n)\left(\mathbf{A}^{\mathrm{T}} \otimes \mathbf{I}_n + \mathbf{I}_n \otimes \mathbf{A}\right) - \left(\mathbf{B}^{\mathrm{T}} \otimes \mathbf{I}_n\right)\left[\left(\mathbf{A}^{\mathrm{T}} \otimes \mathbf{I}_n\right)\mathbf{T}_{nn} + \left(\mathbf{I}_n \otimes \mathbf{A}^{\mathrm{T}}\right)\right] - \left(\mathbf{A}^{\mathrm{T}}\mathbf{B}^{\mathrm{T}} \otimes \mathbf{I}_n\right)\mathbf{T}_{nn} - \left(\mathbf{I}_n \otimes \mathbf{A}^{\mathrm{T}}\mathbf{B}\right)\\
&\left.- \left(\mathbf{I}_n \otimes \mathbf{B}^{\mathrm{T}}\right)\left(\mathbf{A}^{\mathrm{T}} \otimes \mathbf{I}_n + \mathbf{I}_n \otimes \mathbf{A}\right)\right]\\
&= -\frac{\partial \mathbf{U}}{\partial \mathbf{B}}
\end{aligned}$$

This is in direct analogy to the scalar Cauchy–Riemann case. The matrix expression if satisfied, is then holomorphic and its complex differential is given as

$$\left.\frac{\partial \mathbf{G}_k(\mathbf{W}_k)}{\partial \mathbf{W}_k}\right|_{\mathbf{W}=\mathbf{A}+\mathrm{i}\mathbf{B}} = \frac{\partial \mathbf{U}}{\partial \mathbf{A}} + \mathrm{i}\frac{\partial \mathbf{V}}{\partial \mathbf{A}}$$

References

[1] I.M. Filanovsky, H.P. Baltes, Simple CMOS analog square-rooting and squaring circuits, IEEE Trans. Circuits Syst. I 39 (4) (1992) 312–315.
[2] H.T. Davis, Introduction to nonlinear differential and integral equations, in: Dover Books on Mathematics, New York, 1962.
[3] S. Elaydi, An Introduction To Difference Equations, Springer-Verlag, New York, 2005.
[4] Å. Björck, S. Hammarling, A Schur method for the square root of a matrix, in: Linear Algebra and Its Applications, 52-53, 1983, pp. 127–140, 1983/07/01/ 1983.
[5] R. Horn, R. Charles, Matrix Analysis, Cambridge University Press, NY, 2013.
[6] D. Richters, M. Lass, A. Walther, C. Pless, T.D. Kühne, A general algorithm to calculate the inverse principle *p*th root of symmetric definite matrices, 2018, arXiv:1703.02456[math.RA].
[7] W. Hoskins, D. Walton, A faster method of computing the square root of a matrix, IEEE Trans. Automat. Control 23 (3) (1978) 494–495, http://dx.doi.org/10.1109/TAC.1978.1101761.
[8] S. Sra, On the matrix square root via geometric optimization, 2015, pp. 1–8, eprint arXiv:1507.08366[math.NA].
[9] C.R. Johnson, K. Okubo, R. Reams, Uniqueness of matrix square roots and an application, Linear Algebra Appl. 323 (1) (2001) 51–60.
[10] S.J. Julier, J.K. Uhlmann, New extension of the Kalman filter to nonlinear systems, in: AeroSense '97, vol. 3068, SPIE, Orlando Florida, 1997.
[11] B.N. Parlett, The Symmetric Eigenvalue Problem, Prentice-Hall, Englewood Cliffs NJ, 1980.
[12] T. Lin, S. Maji, Improved bilinear pooling with CNNs, 2017, pp. 1–12, arXiv:1707.06772[cs.CV].
[13] S. Pollock, On Kronecker products, tensor products and matrix differential calculus, working paper No 14/02, University of Leicester, UK, 2014.
[14] H. Neudecker, Some theorems on matrix differentiation with special reference to Kronecker matrix products, J. Amer. Statist. Assoc. 64 (327) (1969) 953–963.
[15] J.R. Magnus, H. Neudecker, Matrix Differential Calculus with Applications in Statistics and Economics, John Wiley and Sons, New York, 1999.
[16] A. Graham, Kronecker Products and Matrix Calculus with Applications (Mathematics and Its Applications), Ellis horwood Ltd, Chichester UK, 1981.
[17] D.A. Harville, Matrix Algebra from a Statiticians's Perspective, Springer-Verlag, New York, 2008.
[18] G. Chesni, A. Garulli, A. Tesi, A. Vicino, LMI-based computation of optimal quadratic Lyapunov functions for odd polynomial systems, Int. J. Robust Nonlinear Control 15 (1) (2004) 35–49.
[19] S. Boyd, L. El Ghaoui, E. Feron, V. Balakrishnan, Linear Matrix Inequalities in System and Control Theory (SIAM Studies in Applied Mathematics), SIAM, 1994.
[20] C. Scherer, P. Gahinet, M. Chilali, Multiobjective output-feedback control via LMI optimization, IEEE Trans. Automat. Control 42 (7) (1997) 896–911, http://dx.doi.org/10.1109/9.599969.

[21] M. Chilali, P. Gahinet, H/sub/spl infin// design with pole placement constraints: An LMI approach, IEEE Trans. Automat. Control 41 (3) (1996) 358–367, http://dx.doi.org/10.1109/9.486637.
[22] H. Zhang, D.P. Mandic, Is a complex-valued stepsize advantageous in complex-valued gradient learning algorithms? IEEE Trans. Neural Netw. Learn. Syst. 27 (12) (2016) 2730–2735.
[23] H. Cartan, Elementary Theory of Analytic Functions of One Or Several Complex Variables, Dover publications Inc, New York, 1995.
[24] M.R. Jolly, On the calculus of complex matrices, Internat. J. Control 61 (3) (1995) 749–755.
[25] A.G.J. MacFarlane, I. Postlethwaite, The generalized Nyquist stability criterion and multivariable root loci, Internat. J. Control 25 (1) (1977) 81–127.
[26] E.V. Dulov, N.A. Andrianova, On differentiability of the matrix trace operator and its applications, Korean J. Comput. Appl. Math. journal article 8 (1) (2001) 97–109.
[27] P. Jain, C. Jin, S.M. Kakade, P. Netrapalli, Global Convergence of Non-Convex Gradient Descent for Computing Matrix Square root, in: Presented at the Proceedings of the 20 th International Conference on Artificial Intelligence and Statistics, AISTATS, Florida USA, 2017.
[28] C.M. Gordon, The Square Root Function of a Matrix Master of Science Thesis, Georgia State University Georgia, USA, 2007.
[29] N.J. Hingman, Functions of Matrices, Society for Industrial and Applied Mathematics (SIAM), Philidelphia, USA, 2008.
[30] N.J. Hingman, Newton's method for the matrix square root, Math. Comp. 46 (174) (1986) 537–549.
[31] T.J. Moir, Control theoretical approach to multivariable spectral factorisation problem, Electron. Lett. 45 (2) (2009) 1215–1216.
[32] J.F. Barrett, T.J. Moir, A unified approach to multivariable discrete-time filtering based on the Wiener-theory, Kybernetika 23 (3) (1987) 177–197.
[33] M. Salgado, R. Middleton, G. Goodwin, C, Connection between continuous and discrete Riccati equations with applications to Kalman filtering, IEEE Proc. D 135 (1) (1988) 28–34.
[34] U. Shaked, A general transfer-function approach to the steady-state linear quadratic Gaussian stochastic control problem, Internat. J. Control 24 (6) (1976) 771–800.
[35] A.I. Egorov, Riccati Equations, Pensoft, Sofia and Moscow, 2007.
[36] G. Schulz, Iterative Berechung der reziproken matrix, Angew. Math. Und Mech. 13 (1) (1933) 57–59.
[37] A. Weinman, Uncertain Models and Robust Control, Springer, 1991.
[38] J.E. Gentle, Matrix Algebra. Theory, Computations and Applications in Statistics, Springer Verlag, New York, 2007.
[39] R.A. Horn, C.R. Johnson, Topics in Matrix Analysis, Cambridge University Press, Cambridge, UK, 1991.
[40] A. Brauer, Limits for the characteristic roots of a matrix. IV. Applications to stochastic matrices, Duke Math. J. 19 (1952) 75–91.