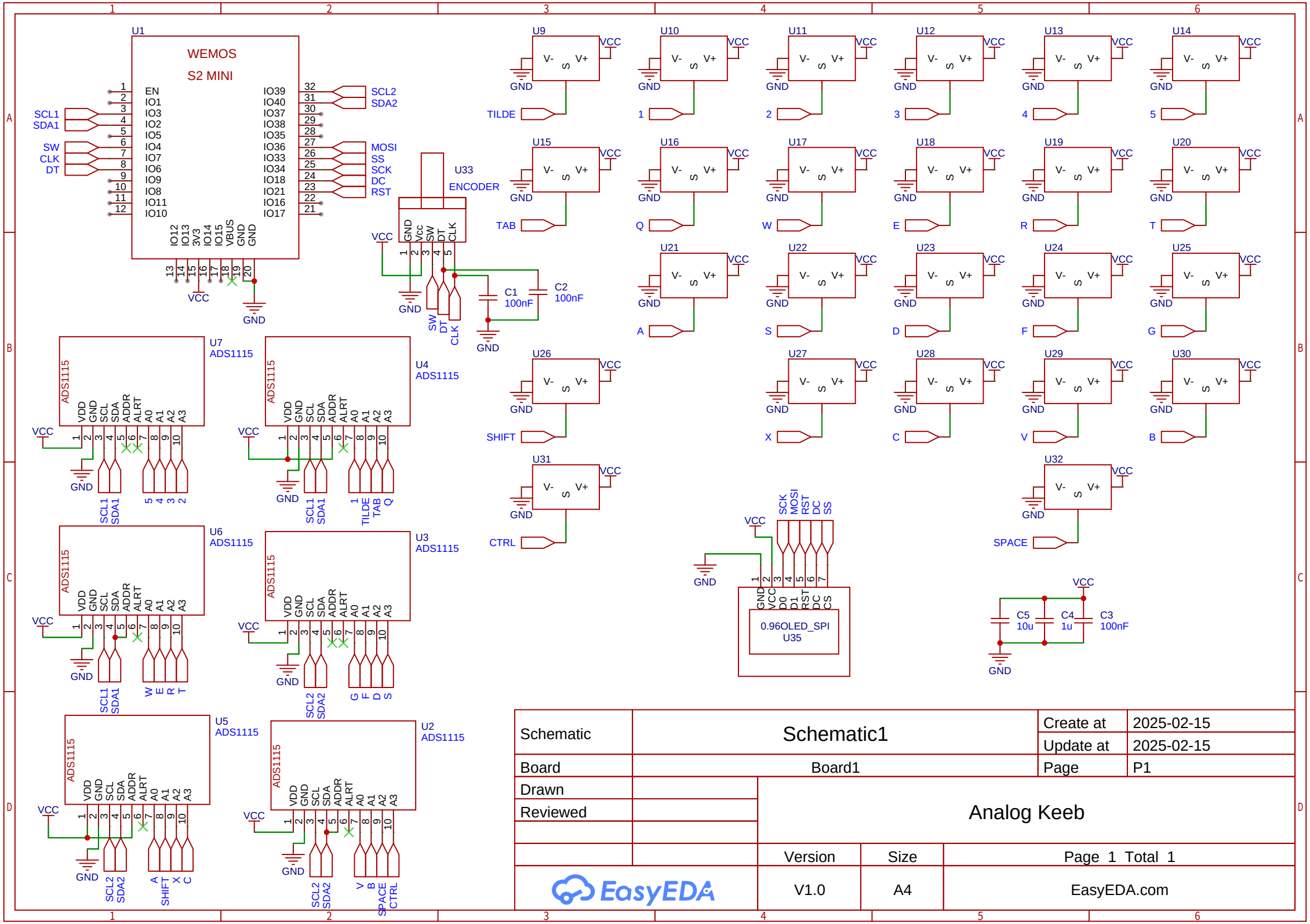
U1
WEMOS
S2 MINI
EN
IO1
IO3
IO2
IO5
IO4
IO7
IO6
IO9
IO8
IO11
IO10
IO39
IO40
IO37
IO38
IO35
IO36
IO33
IO34
IO18
IO21
IO16
IO17
IO12
IO13
3V3
IO14
IO15
VBUS
GND
GND
SCL1
SDA1
SW
CLK
DT
SCL2
SDA2
MOSI
SS
SCK
DC
RST
VCC
GND
U33
ENCODER
GND
Vcc
SW
DT
CLK
C1
100nF
C2
100nF
U7
ADS1115
U4
ADS1115
U6
ADS1115
U3
ADS1115
U5
ADS1115
U2
ADS1115
VDD
GND
SCL
SDA
ADDR
ALRT
A0
A1
A2
A3
U9
U10
U11
U12
U13
U14
U15
U16
U17
U18
U19
U20
U21
U22
U23
U24
U25
U26
U27
U28
U29
U30
U31
U32
V-
S
V+
TILDE
1
2
3
4
5
TAB
Q
W
E
R
T
A
S
D
F
G
SHIFT
X
C
V
B
CTRL
SPACE
SCK
MOSI
RST
DC
SS
GND
VCC
D0
D1
RST
DC
CS
0.96OLED_SPI
U35
C5
10u
C4
1u
C3
100nF
Schematic
Schematic1
Create at
2025-02-15
Update at
2025-02-15
Board
Board1
Page
P1
Drawn
Reviewed
Analog Keeb
Version
Size
Page 1 Total 1
EasyEDA
V1.0
A4
EasyEDA.com