Practice Modelling and Simulation

Individual Assignment

AUTHOR:

TOMO EMMANUEL ADEGBOYEGA

Student no:

2103826

MODULE:

System Modelling, PMS

DEADLINE:

April 3, 2023

INTRODUCTION

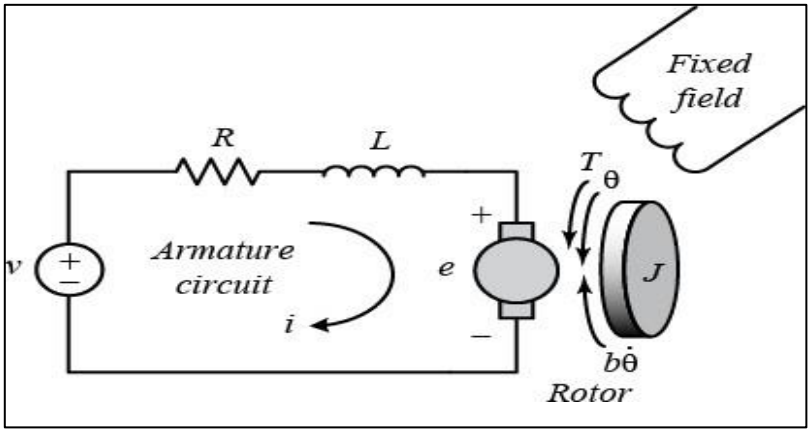

Figure 1; shows schematic diagram of the armature and torques of the Electromechanical system.

An electric two-wheeler is propelled by electric motor(s), using energy stored in rechargeable batteries. The chosen motor should be powerful enough to deliver required vehicle performance. For this case a DC motor is to be researched. It is an electromechanical machine that converts electrical energy, supplied by battery, into mechanical energy. A simplified electric circuit of DC machine is shown in Figure 1.

PROBLEM DEFINITION

To Investigate whether the DC motor can propel the vehicle for the given load condition(s).

SIMULINK MODELLING

Mechanical

$$F_L = W + X\,v^2 + Y\frac{dv}{dt} + Z \cdot \sin\alpha$$

$$T_L = F_L \cdot i \cdot r$$

$$J\frac{d\dot{\theta}(t)}{dt} = K_t i(t) - b\frac{d\theta(t)}{dt} - T_L$$

Fl= Load force [N]

Tl= Load Torque

Electrical

$$v(t) = Ri(t) + L\frac{di(t)}{dt} + K_b\frac{d\theta(t)}{dt}$$

The equation was modelled in Matlab-Simulink with respect to the electromechanical equations provided.

The input to the system is the voltage applied to the motor's armature (V), while the output is the angular speed of the shaft.

This system will be modeled by summing the torques acting on the rotor inertia and integrating the rotor's angular acceleration to give the velocity.Also, Kirchoff's laws was applied to the armature circuit.

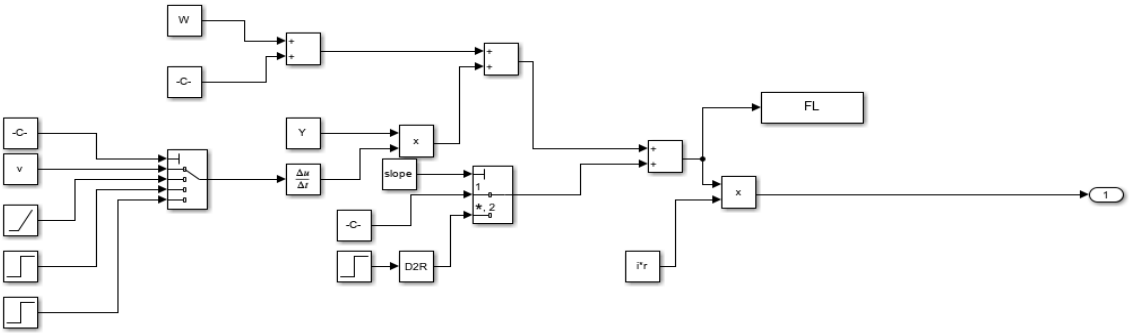

Figure 2; Simulink model of the Load torque.

The effect of the load torque limits the response of the system as it is taken into consideration.

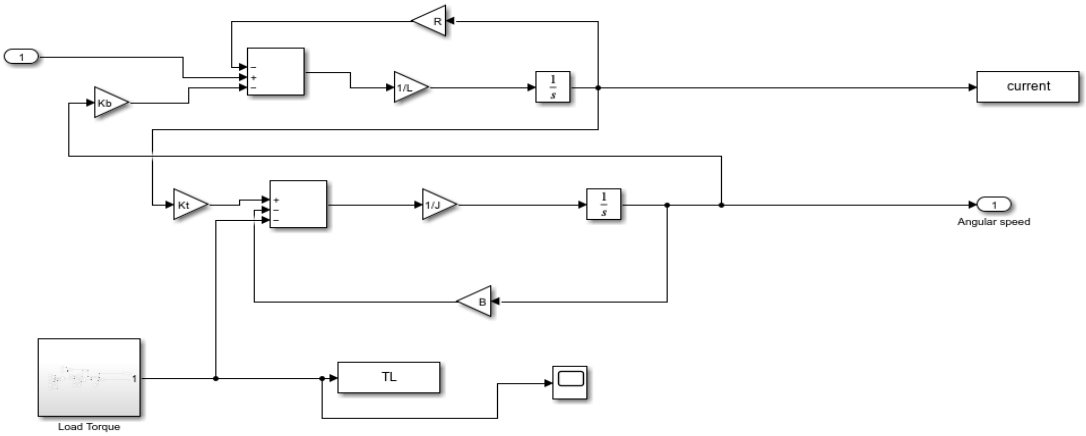

Figure 3; Simulink model of the Electromechanical system.

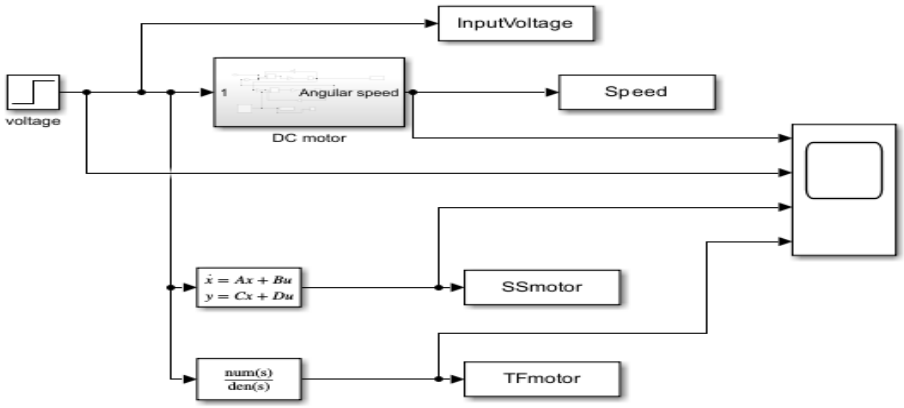

Figure 4; Entire Simulink model showing the system input and numerous outputs including the Transfer function and State space.

MODEL OUTPUTS

Model behaviour

The model response was gotten for input voltage of 48 volts and other conditions set to zero. The approximate output of the system was:

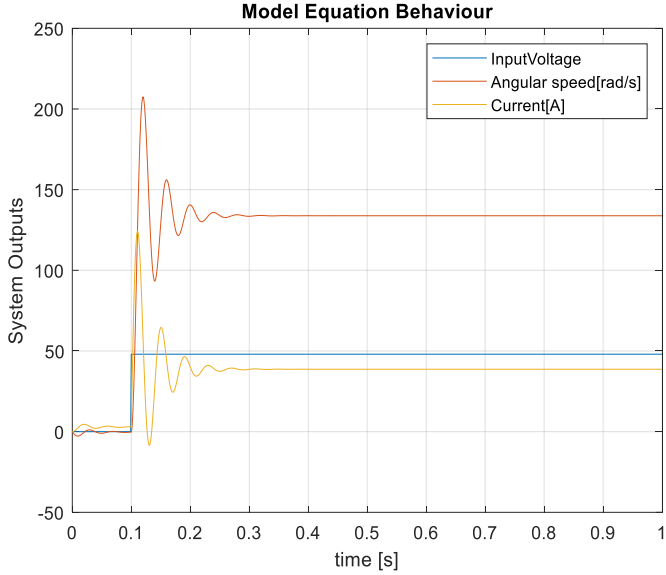

Input voltage= 48V

Outputs:

Current peak=120 mA

Angular speed peak= 208 rad/s

Current steady state value= 38 A

Angular speed @ steady state value=133 rad/s

Peak time=0.12s

Steady state time=0.3s

Figure 5; Shows the system behaviour with respect to angular speed and current.

TRANSFER FUNCTION

Applying the Laplace transform, the above modeling equations can be expressed in terms of the Laplace variable s.

$$s(Js + B)\Theta(s) = KtI(s)$$
$$(Ls + R)I(s) = V(s) - Kbs\Theta(s)$$

We arrive at the following open-loop transfer function by eliminating $I(s)$ between the two above equations, where the rotational speed is considered the output and the armature voltage is considered the input.

Hence the Transfer function of the electromechanical system is given below.

$$P_{motor} = \frac{\dot{\Theta}(s)}{V(s)} = \frac{Kt}{s((Js+B)(Ls+R)+(Kb*Kt)}\text{(rad/s)}$$

The output of the system is the expected angular speed.

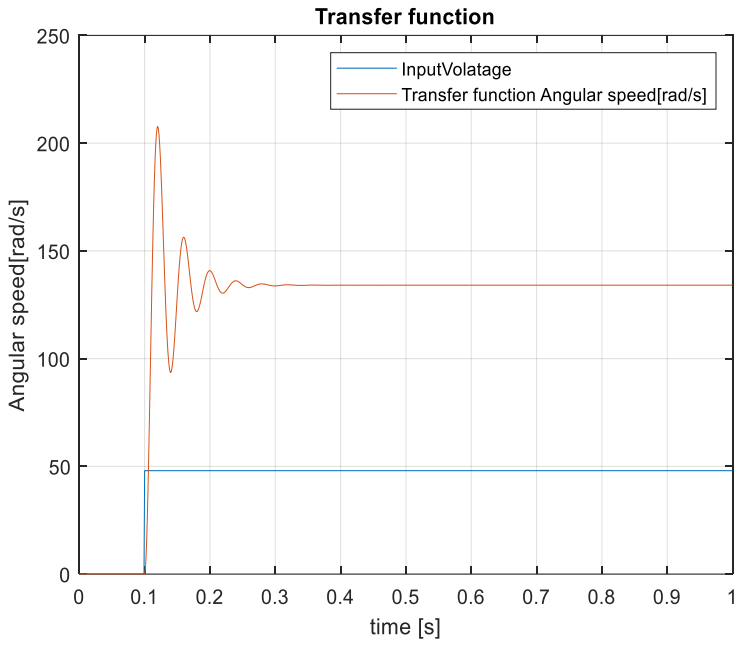

Input voltage= 48V

Outputs:

Angular speed peak= 208 rad/s

Angular speed @ steady state value=133 rad/s

Peak time=0.12s

Steady state time=0.3s

Figure 6;Transfer function of the system behaviour with respect to angular speed

STATESPACE

The differential equations from above can also be expressed in state-space form by choosing the motor position, motor speed and armature current as the state variables. Again the armature voltage is treated as the input and the rotational speed is chosen as the output.

$$\frac{d}{dt}\begin{bmatrix}\Theta\\ \dot{\Theta}\\ i\end{bmatrix} = \begin{bmatrix}0 & 1 & 0\\ 0 & -B/J & Kt/J\\ 0 & -Kb/L & -R/L\end{bmatrix}\begin{bmatrix}\Theta\\ \dot{\Theta}\\ i\end{bmatrix} + \begin{bmatrix}0\\ 0\\ 1/L\end{bmatrix}V$$

$$y = \begin{bmatrix} 0 & 1 & 0 \end{bmatrix} \begin{bmatrix} \theta \\ \dot{\theta} \\ i \end{bmatrix}$$

hence

$$A = \begin{bmatrix} 0 & 1 & 0 \\ 0 & -B/J & Kt/J \\ 0 & -Kb/L & -R/L \end{bmatrix} \; ; \; B = \begin{bmatrix} 0 \\ 0 \\ 1/L \end{bmatrix} \; ; \; C = \begin{bmatrix} 0 & 1 & 0 \end{bmatrix} \; ; \; D = 0$$

The output of the system is the rotational speed.

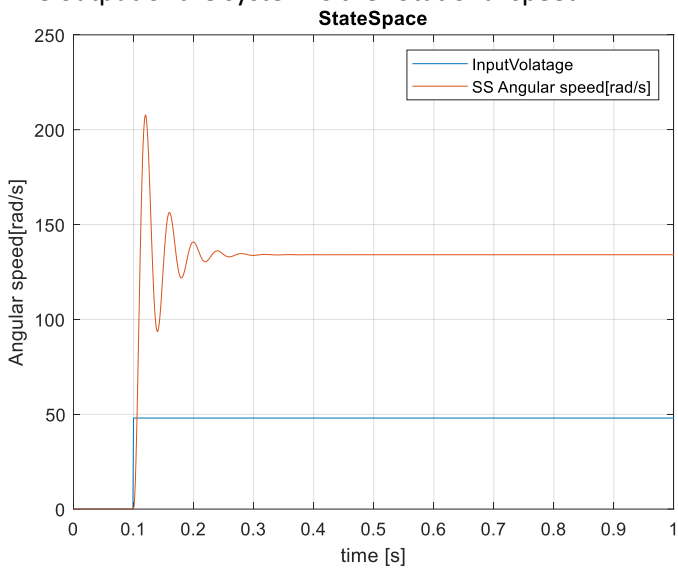

Input voltage= 48V

Outputs:

Angular speed peak= 208 rad/s

Angular speed @ steady state value=133 rad/s

Peak time=0.12s

Steady state time=0.3s

Figure 7; State Space of the system behaviour with respect to angular speed

The graph below shows the combination of the model equations, state space and transfer function. It shows the relationship and the verification of the model equations using the transfer functions and state space models. From the graph it is concluded that the model behaves in a desired manner as it has same behaviour with the state space and transfer function models, with negligible error.

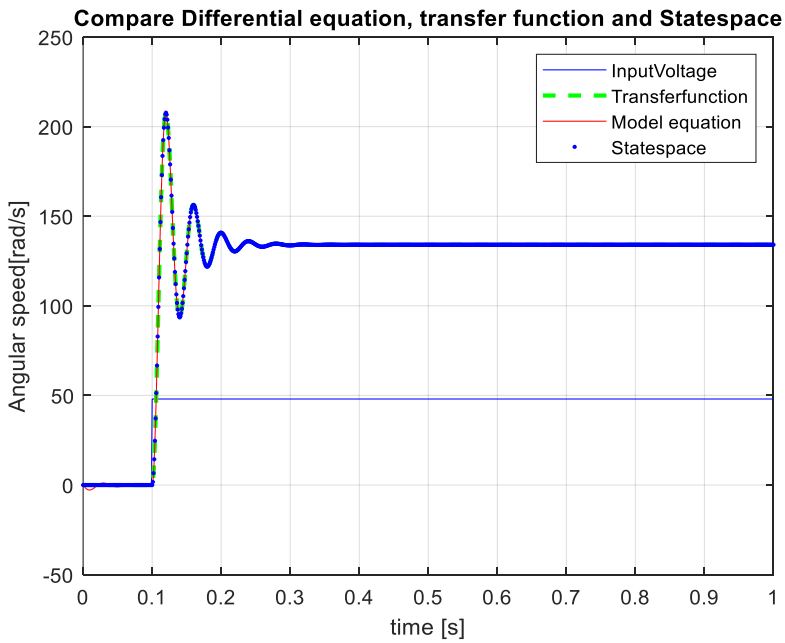

Figure 8;Comparing the Model equations, Transfer function and state space model needed to verify the model behaviour.

The model was then altered to test for different scenarios. Below are various graphs showing numerous output for the different scenarios tested for.

Scenario 1

The inputs for the scenario is a step rise in the input voltage at 0.1 second from 0 to 48 V,a constant input of velocity = 0 [kmph] and a constant input of road slope = 0 [degree]. The scenario gives an expected behaviour as shown in the model behaviour in figure 5. The outputs are same. A corresponding rise in the current lead to an increased angular speed. Although an oscillatory behaviour

is seen at the dead time, this could be due to the load torque effect and Back emf. The current is also at a steady value less that the input value. This could be due to the resistance in the electrical part of the entire system.

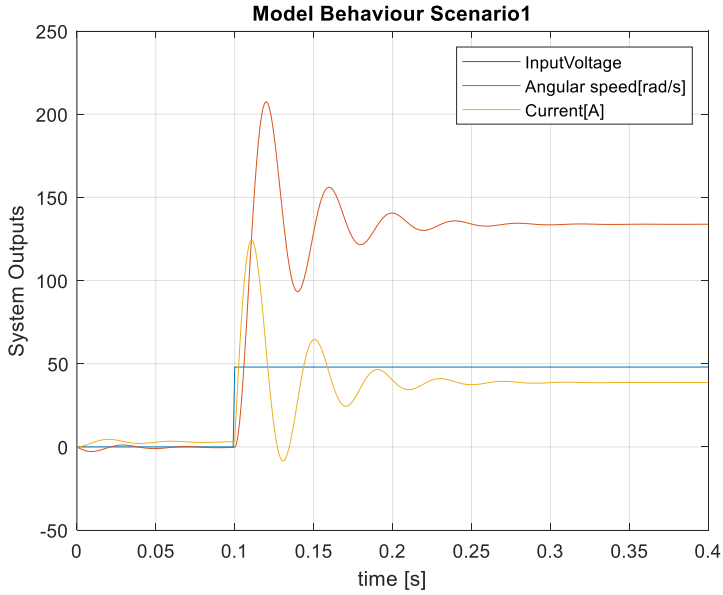

Outputs:

Current peak=120 mA

Angular speed peak= 208 rad/s

Current steady state value= 38 A

Angular speed @ steady state value=133 rad/s

Peak time=0.12s

Steady state time=0.3s

Figure 9; Scenario 1 model behaviour.

Scenario 2

The input stays same as in scenario 1 but the road slope was set to 3 degrees and velocity to 36 kmph. The current increase is noticed from the graph this could be to compensate for the increase in slope which requires increase speed and hence increased voltage input. The system initially attains the initial angular speed peak of 208rad/s before compensation for the extra disturbances.

The maximum peak angular speed obtained is 281rad/s but the steady state speed fell to 100 rad/s. for this scenario, the DC motor is unable to propel the vehicle.

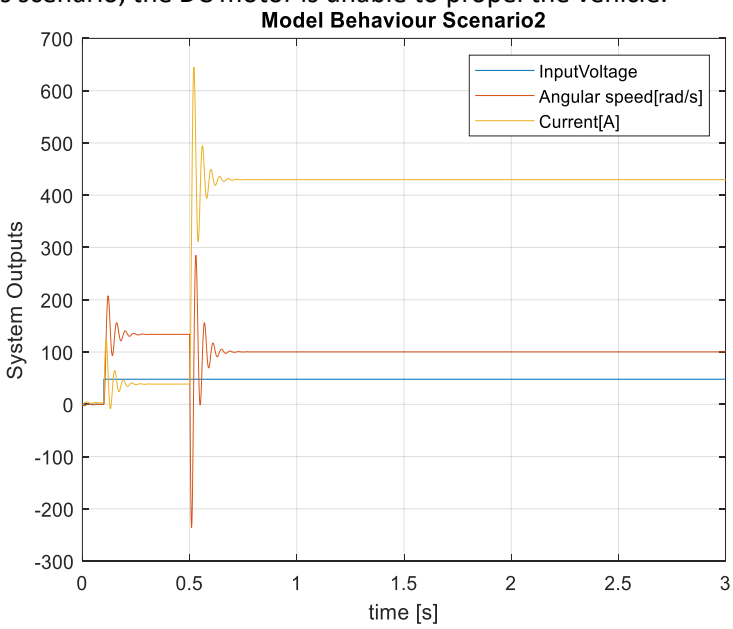

Figure 10; Scenario 2 Model behaviour.

Scenario 3

The input stays same as in scenario 1 but the velocity was set to 36 kmph. The current increase is noticed from the graph this could be to compensate for the increase in slope which requires increase speed and hence increased voltage input. The system attains the initial angular speed peak of 208rad/s. This is done with a steady current supply and the system response is at the exact application of the input voltage. The DC motor can propel the vehicle in this scenario.

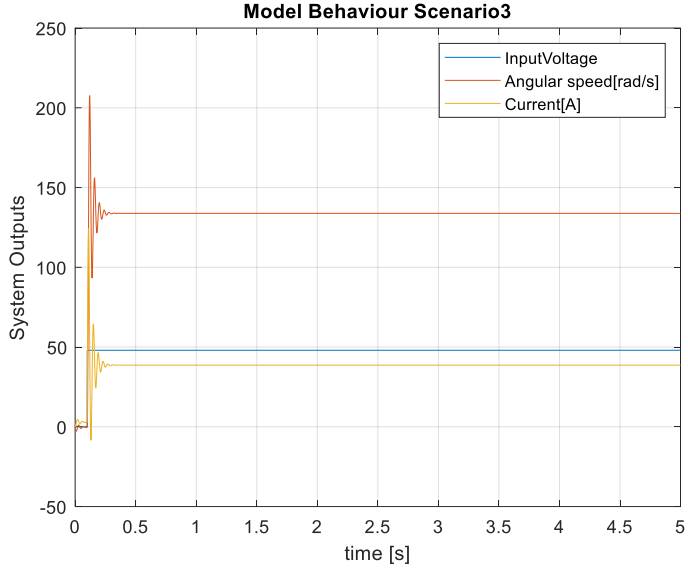

Figure 11; Scenario 3 Model behaviour.

MODEL VERIFICATION

Validation data

The validation data wass imported into the matlab workspace , the correspondimng graphs were plotted for the first 1000 points.

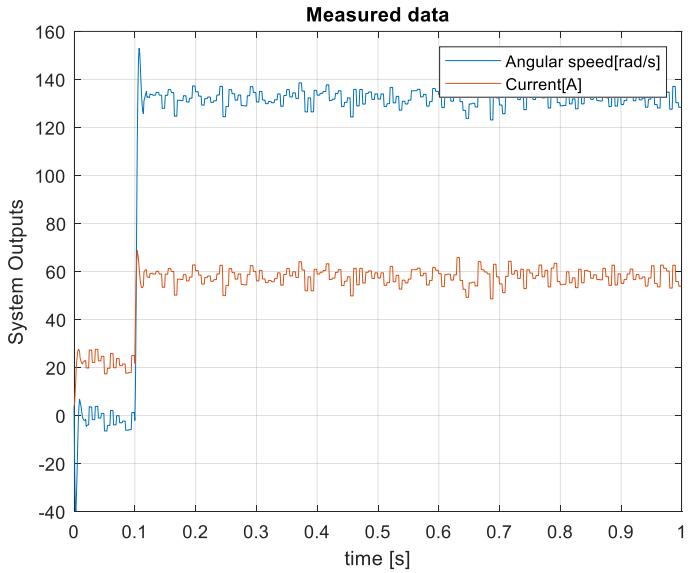

Figure 12; Measured Data.

Angular speed validation

Comparing the simulated speed with the measured speed, we get different peaks, but same steady state output. The measured angular speed peak is 152rad/s and the simulated was obtained initially as 208rad/s. Also, it takes the simulated model to get to its steady state in comparison with the measured. The rise time was quite close as well, this means a case of similar transient response. The negative behaviour of the measured data from 0 to 0.1 could be because of disturbances.

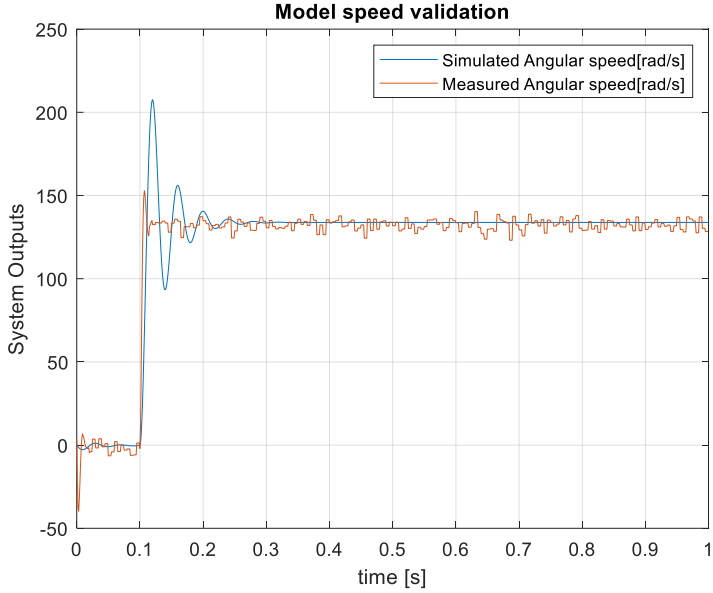

Figure 13; Validation of angular speed.

Current validation

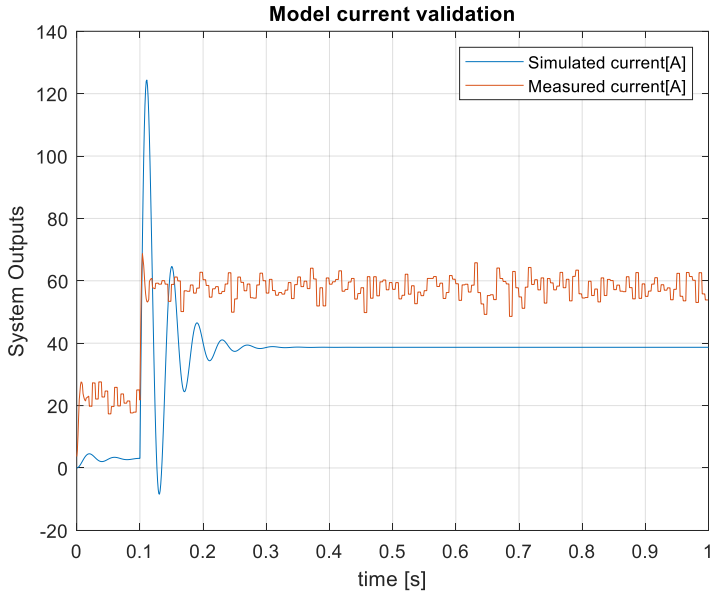

Figure 14; Current Validation.

SENSITIVITY ANALYSIS

Sensitivity analysis was done as another form of validating the model. Certain parameters were tuned and the outputs displayed In the graphs below.

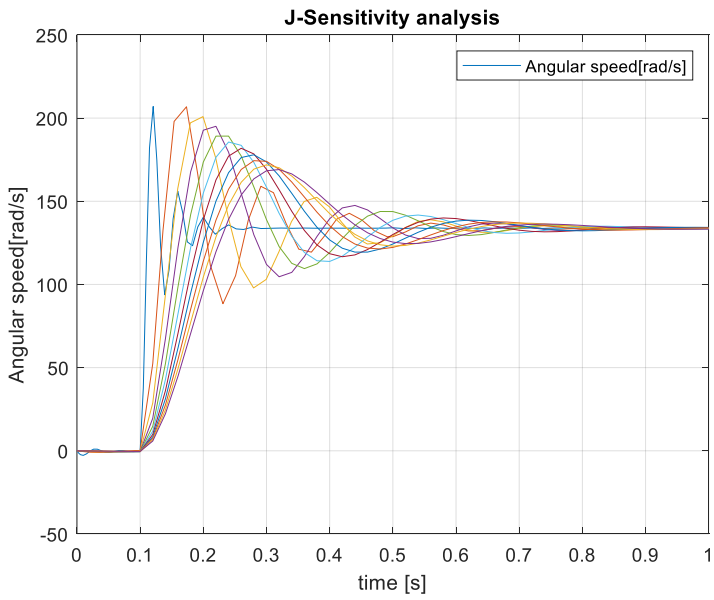

Figure 15; J sensitivity analysis.

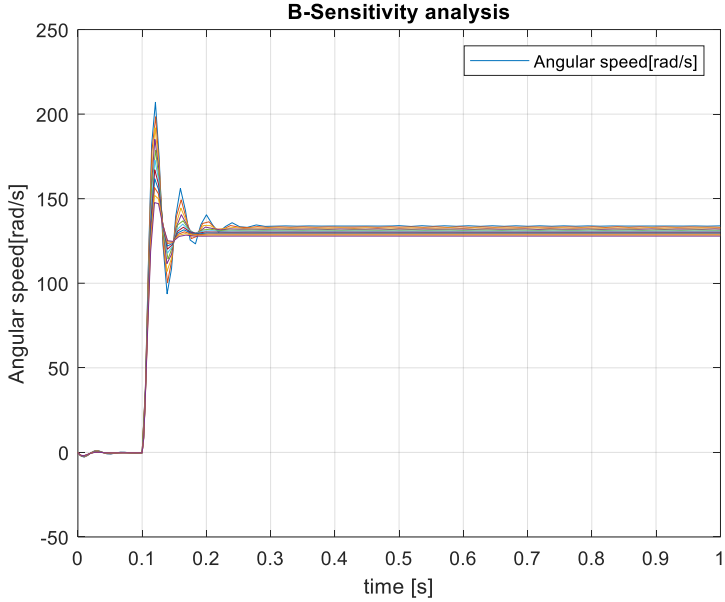

Figure 16; B sensitivity analysis.

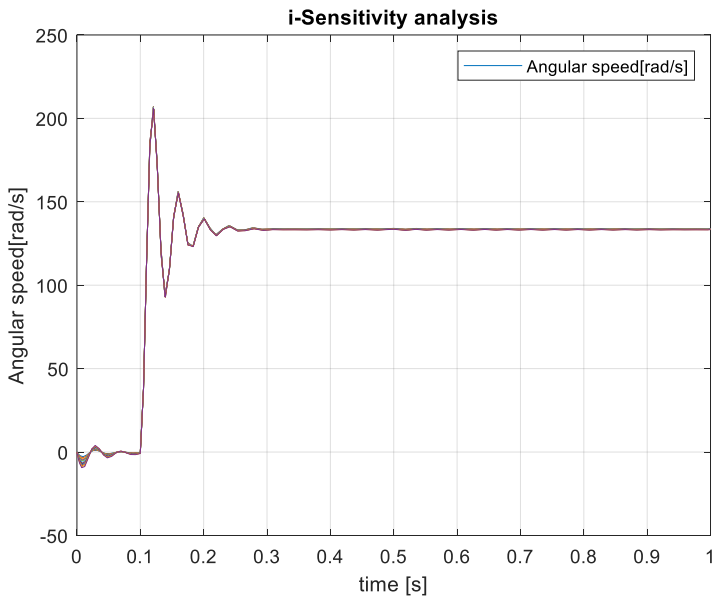

Figure 17; i-Sensitivity analysis.

BONUS

Increasing this solver step size above 0.005 seconds yields an error warning which state that we actually increased the minimal allowed error in simulating the model.This means for any further increased simulation time we accrue a higher amount of error over the time of simulation,which makes the output of our model approximately incorrect.

CONCLUSION

To conclude this modeling, it can be said that the input voltage is enough or sufficient to propel the vehicle. Although at scenarios where we have a road slope the voltage needs to be increased in order to get the necessary angular speed to overcome such disturbance. There is a certain value of maximum voltage that needs to be applied to the system of which further increase in such value of the input voltage would yield no results in order to increase the angular speed needed to propel the vehicle.