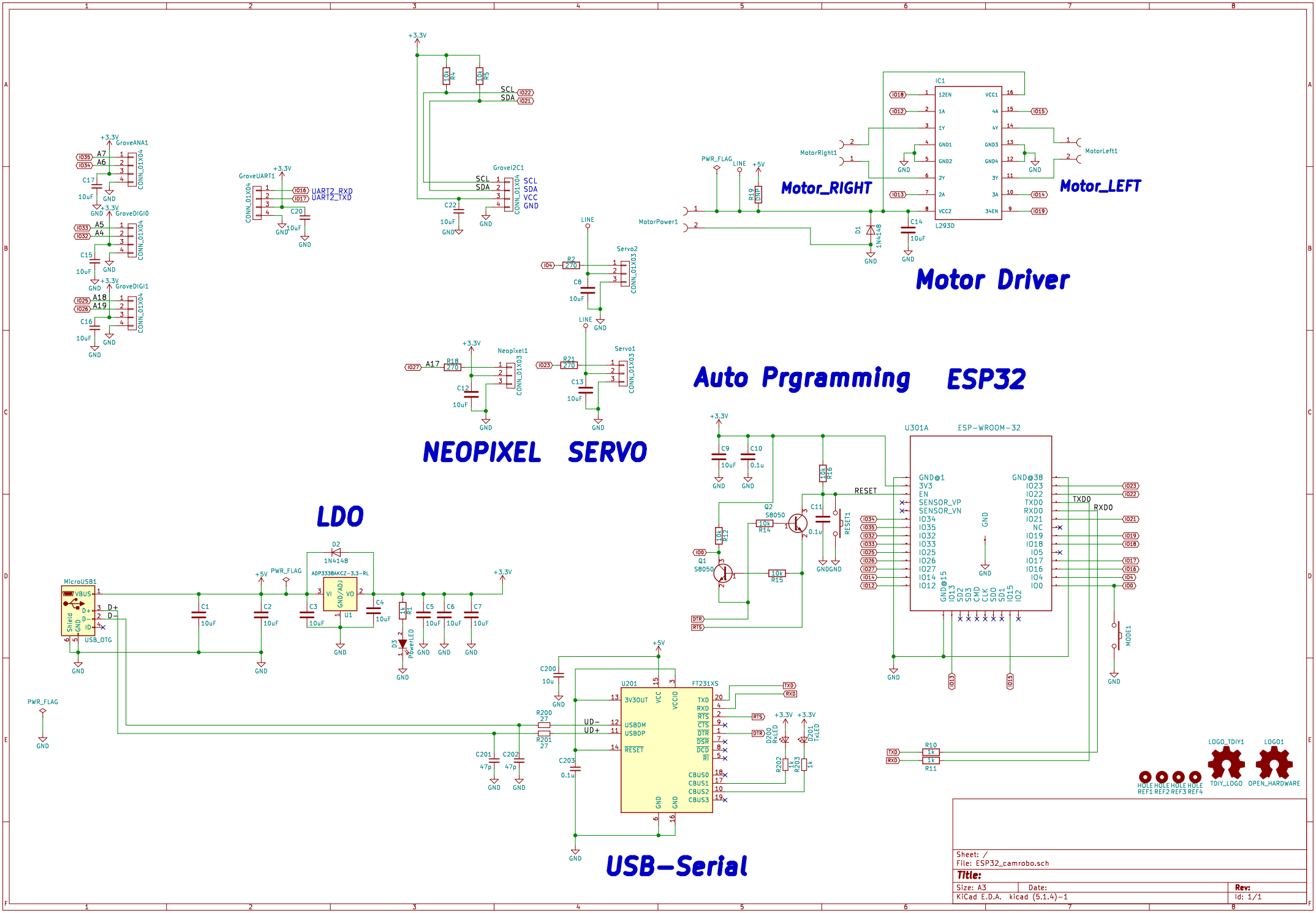
Motor_RIGHT
Motor_LEFT
Motor Driver
Auto Prgramming ESP32
NEOPIXEL SERVO
LDO
USB-Serial
IC1
L293D
U301A
ESP-WROOM-32
U201
FT231XS
MicroUSB1
ADP3338AKCZ-3.3-RL
Grove2C1
GroveUART1
GroveANA1
GroveDIGI0
GroveDIGI1
Servo1
Servo2
Neopixel1
MotorRight1
MotorLeft1
MotorPower1
RESET1
MODE1
LOGO_TDIY1
LOGO1
TDIY_LOGO
OPEN_HARDWARE
HOLE REF1
HOLE REF2
HOLE REF3
HOLE REF4
Sheet: /
File: ESP32_camrobo.sch
Title:
Size: A3
Date:
Rev:
KiCad E.D.A. kicad (5.1.4)-1
Id: 1/1