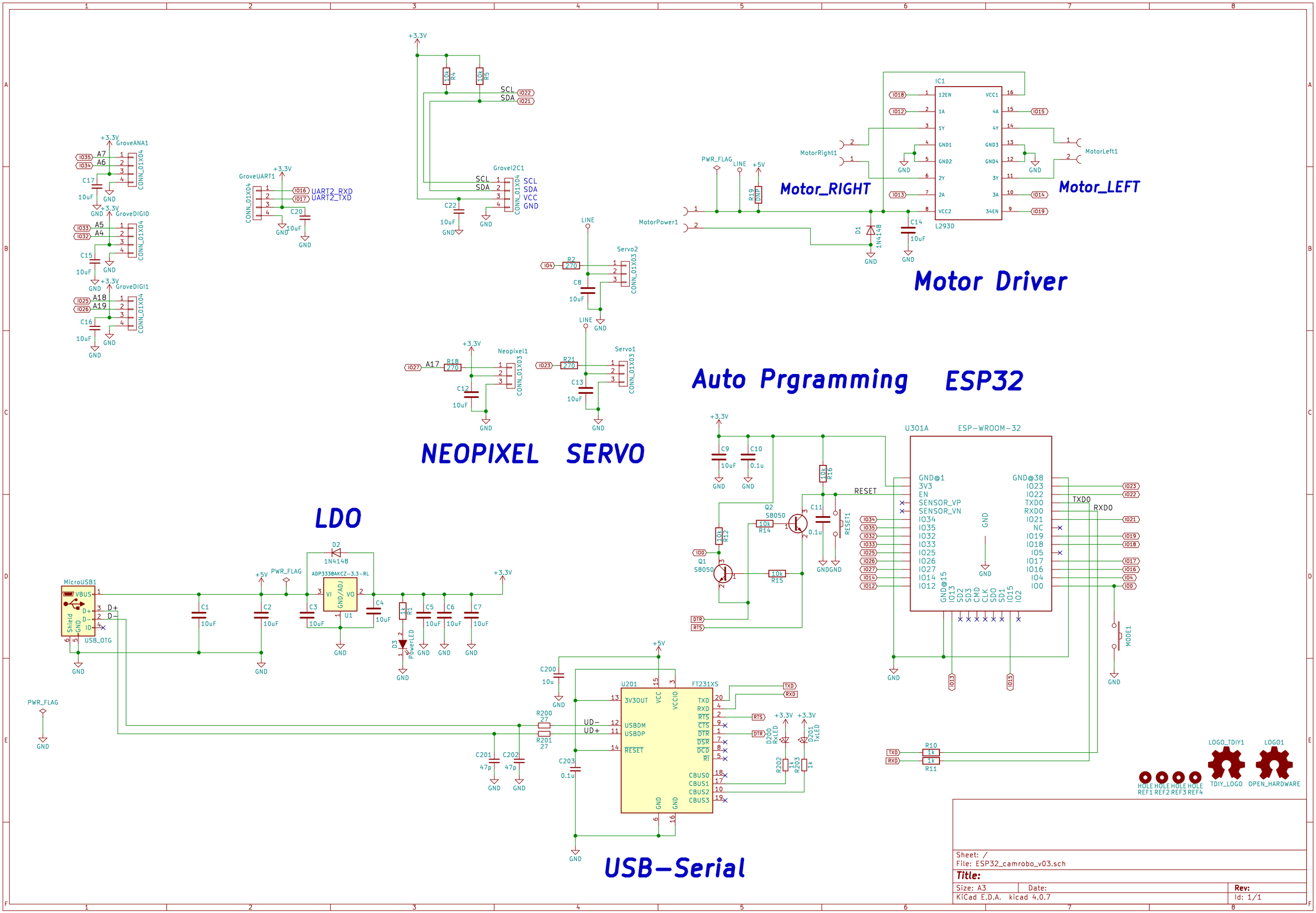
Motor_RIGHT
Motor_LEFT
Motor Driver
Auto Prgramming ESP32
NEOPIXEL SERVO
LDO
USB-Serial
IC1
L293D
U301A
ESP-WROOM-32
U201
FT231XS
MicroUSB1
ADP3338AKCZ-3.3-RL
GroveANA1
GroveDIGI0
GroveDIGI1
GroveUART1
Grove2C1
Servo2
Servo1
Neopixel1
MotorRight1
MotorLeft1
MotorPower1
PWR_FLAG
UART2_RXD
UART2_TXD
SCL
SDA
RESET
TXD0
RXD0
MODE1
LOGO_TDIY1
LOGO1
TDIY_LOGO
OPEN_HARDWARE
Sheet: /
File: ESP32_camrobo_v03.sch
Title:
Size: A3
Date:
Rev:
KiCad E.D.A. kicad 4.0.7
Id: 1/1