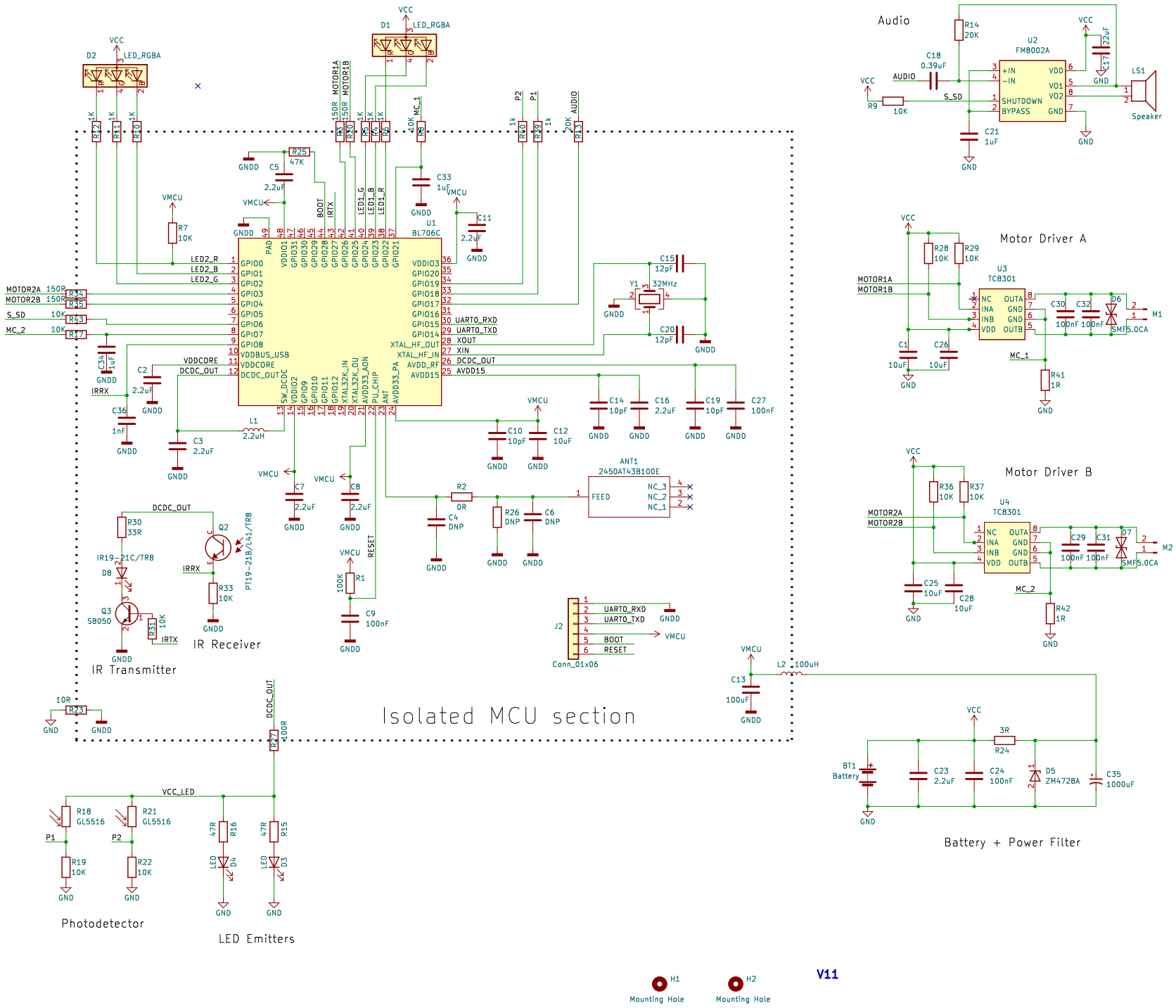
Isolated MCU section
U1
BL706C
D1
LED_RGBA
D2
LED_RGBA
Audio
U2
FM8002A
LS1
Speaker
Motor Driver A
U3
TC8301
Motor Driver B
U4
TC8301
IR Receiver
IR Transmitter
Photodetector
LED Emitters
Battery + Power Filter
ANT1
2450AT43B100E
Y1
32MHz
J2
Conn_01x06
Mounting Hole
Mounting Hole
V11