Power

File: power.kicad_sch

Mechanical

File: mechanical.kicad_sch

Expansion bus connector

File: expansion_bus.kicad_sch

Data bus buffers

File: data_buffers.kicad_sch

Address bus buffers

File: address_buffers.kicad_sch

Promulator

File: promulator.kicad_sch

FPGA host interface

File: fpga_host.kicad_sch

FPGA regen memory interface

File: fpga_regen.kicad_sch

Regen bus mux 1

File: regen_bus_mux_1.kicad_sch

Regen bus mux 2

File: regen_bus_mux_2.kicad_sch

Regen bus mux 3

File: regen_bus_mux_3.kicad_sch

Regen memory banks

File: regen_mem.kicad_sch

Font RAM

File: font_ram_2.kicad_sch

Expansion ROM

File: exp_rom.kicad_sch

RAMDAC

File: ramdac.kicad_sch

I2C controller

File: i2c.kicad_sch

Keyboard controller

File: keyboard.kicad_sch

FREE FOR NON-COMMERCIAL USE
(C) TOM STOREY

Sheet: /
File: Video_Card.kicad_sch

Title: VGA VIDEO, AND PS/2 KEYBOARD AND MOUSE CARD

Size: A4	Date: 2025-07-30	**Rev: 1**
KiCad E.D.A. 9.0.3		Id: 1/18

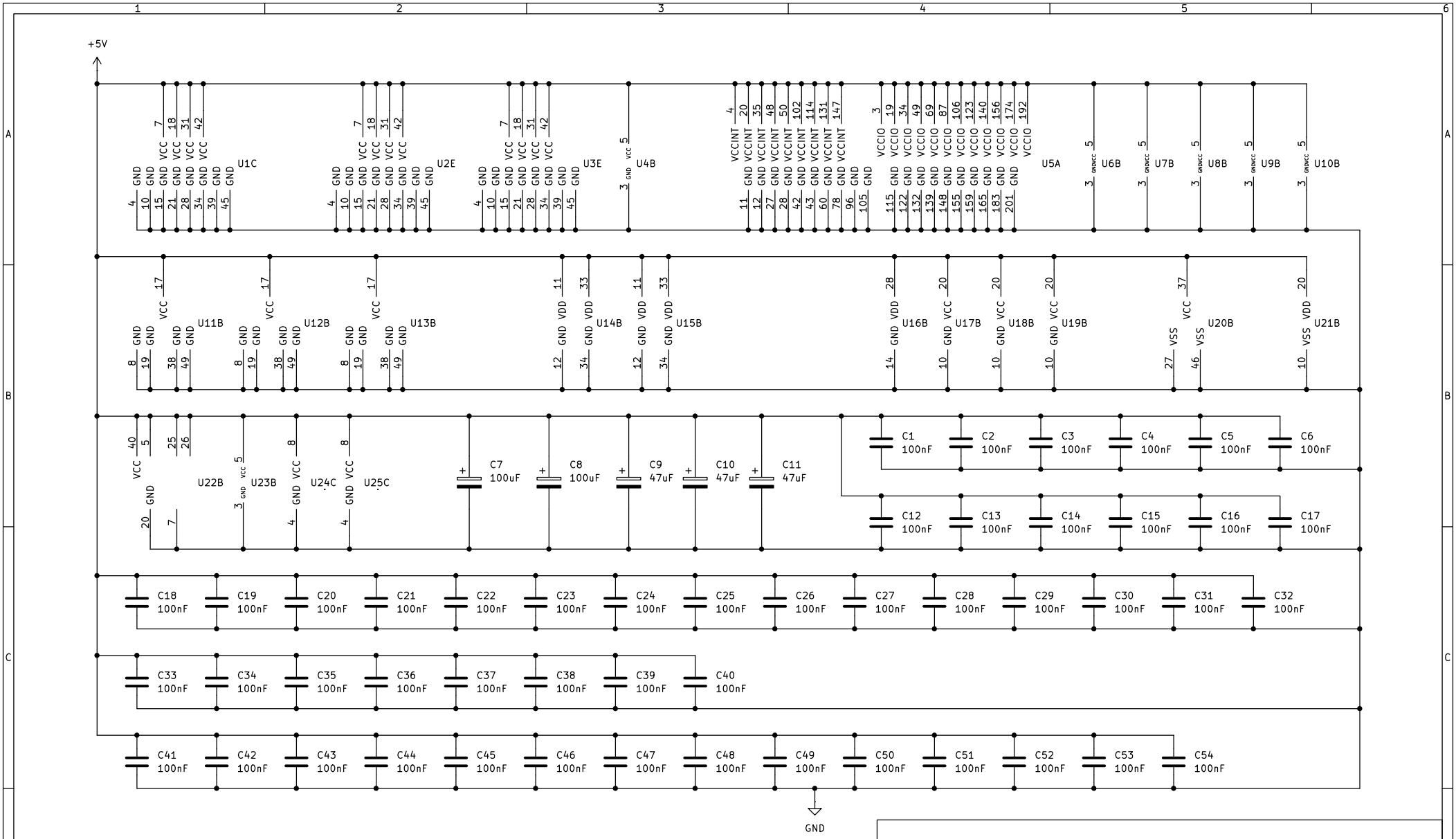

FREE FOR NON-COMMERCIAL USE
(C) TOM STOREY

Sheet: /Power/
File: power.kicad_sch

Title: POWER PINS AND CAPACITORS

Size: A4	Date: 2025-07-30	**Rev: 1**
KiCad E.D.A. 9.0.3		Id: 2/18

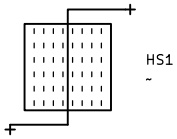

H1
MountingHole_3.2mm_M3

H2
MountingHole_3.2mm_M3

FREE FOR NON-COMMERCIAL USE
(C) TOM STOREY

Sheet: /Mechanical/
File: mechanical.kicad_sch

Title: MECHANICAL

Size: A4	Date: 2025-07-30	**Rev: 1**
KiCad E.D.A. 9.0.3		Id: 3/18

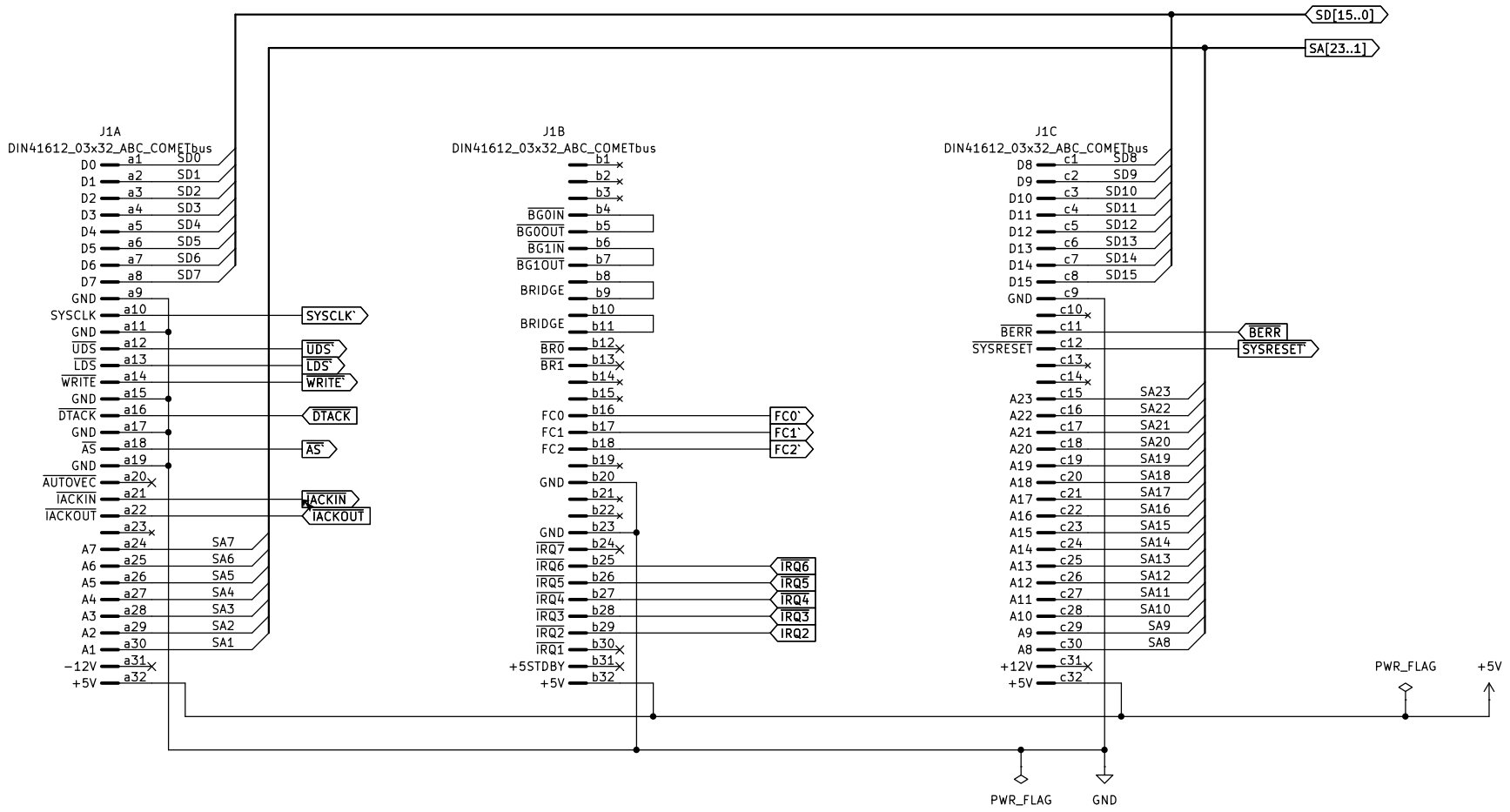

FREE FOR NON-COMMERCIAL USE
(C) TOM STOREY

Sheet: /Expansion bus connector/
File: expansion_bus.kicad_sch

Title: EXPANSION BUS CONNECTOR

Size: A4	Date: 2025-07-30	**Rev: 1**
KiCad E.D.A. 9.0.3		Id: 4/18

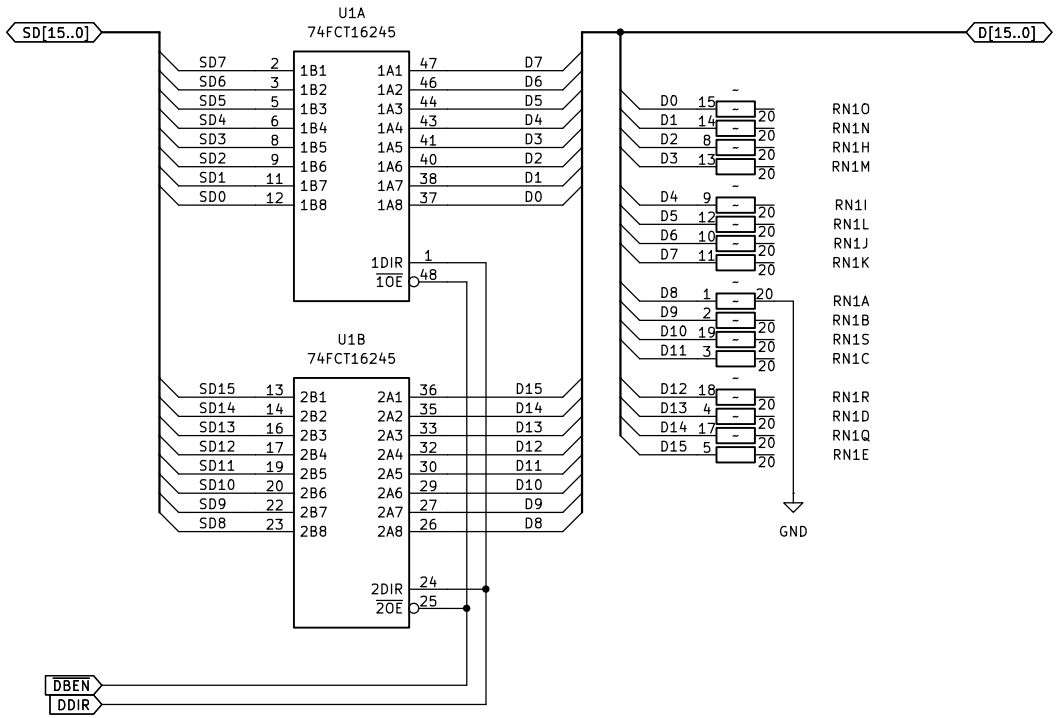

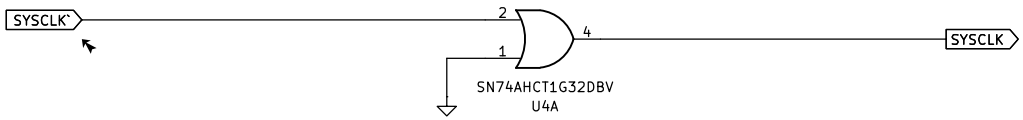

U4 SUBSTITUTION:

SN74AHCT1G32DBV
SN74AHCT1G125DBV

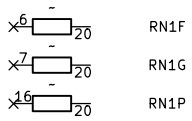

FREE FOR NON-COMMERCIAL USE
(C) TOM STOREY

Sheet: /Data bus buffers/
File: data_buffers.kicad_sch

Title: DATA BUS AND OTHER BUFFERS

Size: A4	Date: 2025-07-30	**Rev: 1**
KiCad E.D.A. 9.0.3		Id: 5/18

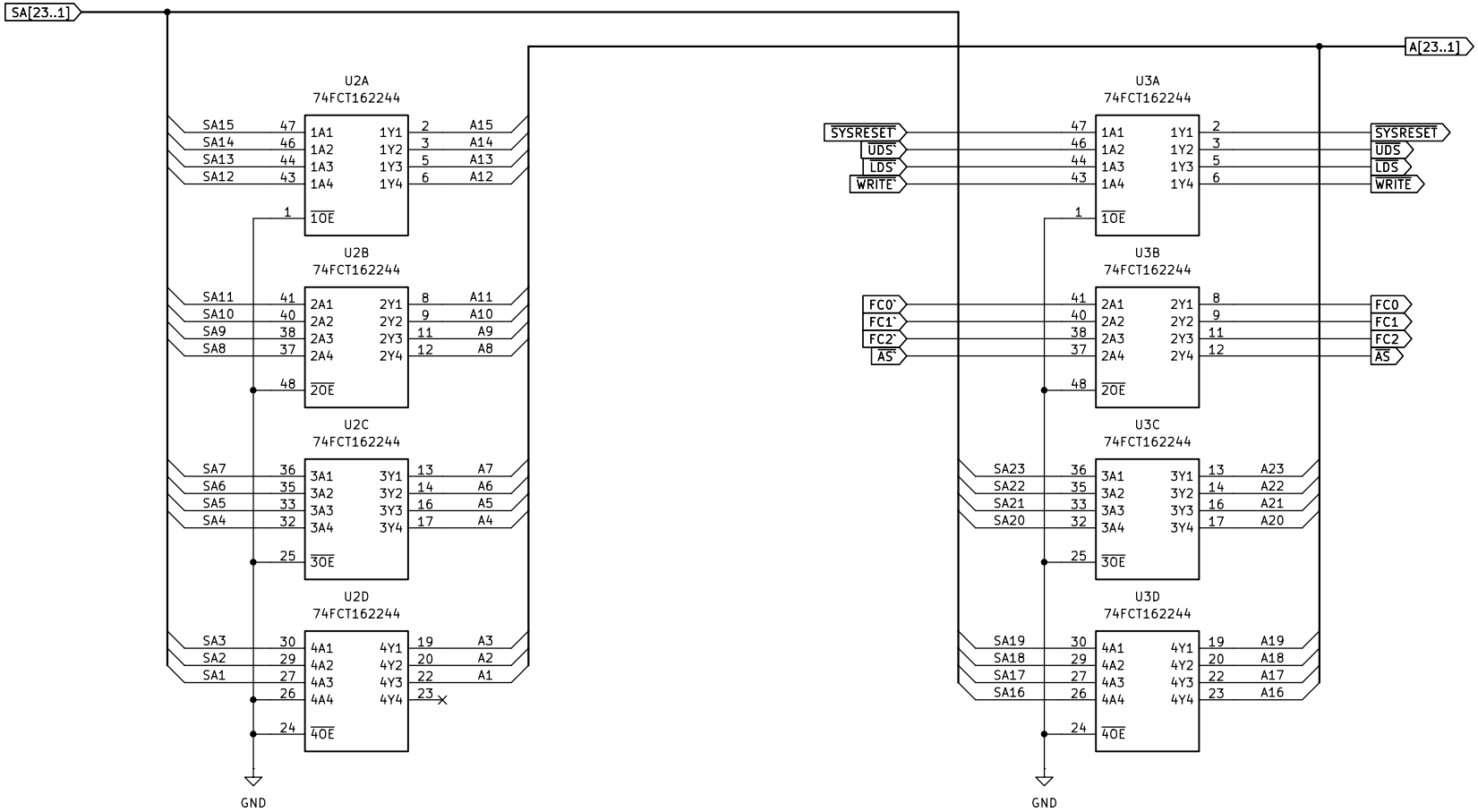

FREE FOR NON-COMMERCIAL USE

(C) TOM STOREY

Sheet: /Address bus buffers/

File: address_buffers.kicad_sch

Title: ADDRESS BUS AND CONTROL SIGNAL BUFFERS

Size: A4	Date: 2025-07-30	**Rev: 1**
KiCad E.D.A. 9.0.3		Id: 6/18

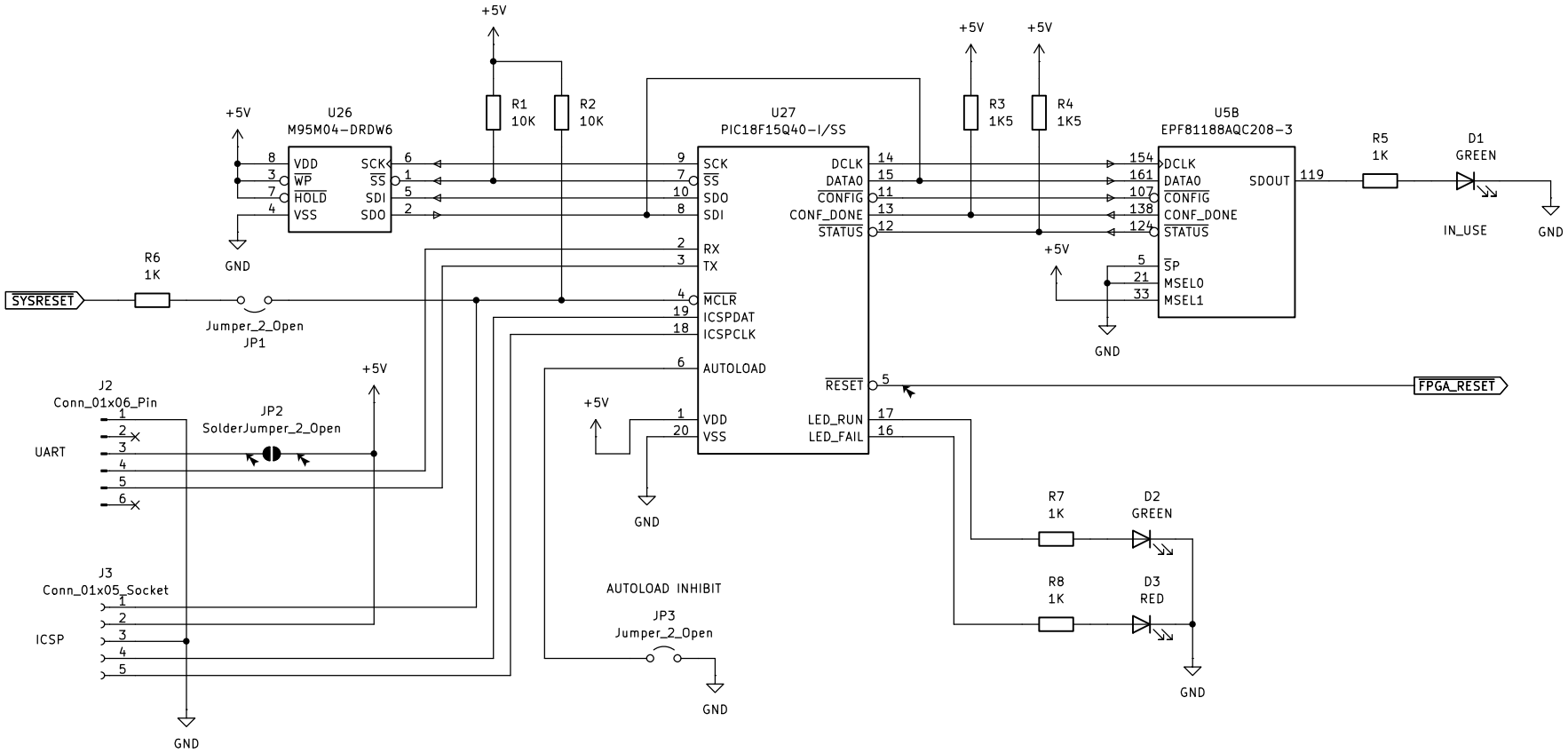

$\overline{SP}$	MSEL1	MSEL0	MODE	
0	0	0	AS	ACTIVE SERIAL
0	0	1	RESERVED	RESERVED
0	1	0	PS	PASSIVE SERIAL **
0	1	1	RESERVED	RESERVED
1	0	0	APU	ACTIVE PARALLEL UP
1	0	1	PPS	PASSIVE PARALLEL SYNC
1	1	0	APD	ACTIVE PARALLEL DOWN
1	1	1	PPA	PASSIVE PARALLEL ASYNC

FREE FOR NON-COMMERCIAL USE
(C) TOM STOREY

Sheet: /Promulator/
File: promulator.kicad_sch

Title: PROMULATOR – FPGA CONFIGURATION PROM EMULATOR

Size: A4	Date: 2025-07-30	**Rev: 1**
KiCad E.D.A. 9.0.3		Id: 7/18

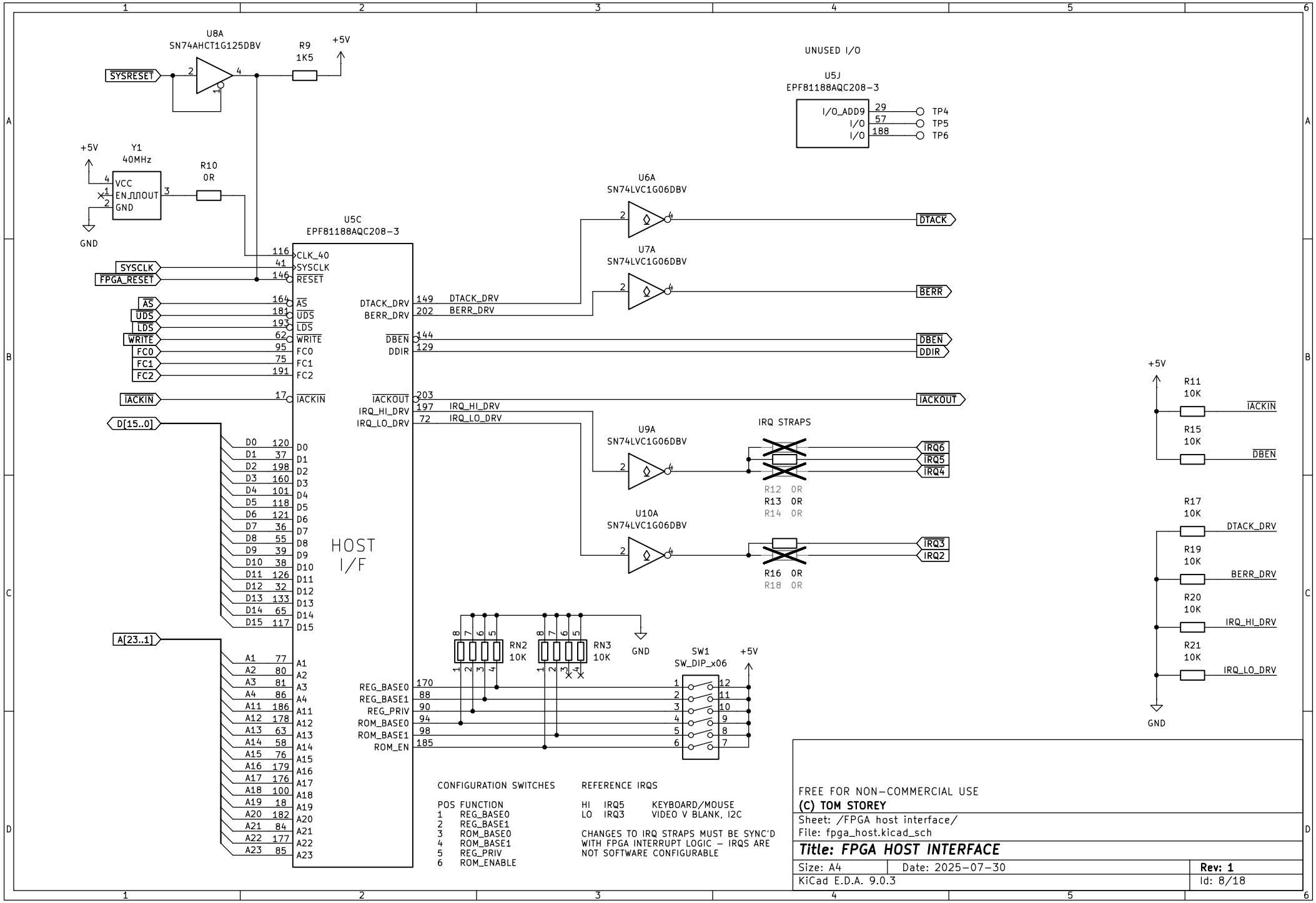
U8A
SN74AHCT1G125DBV
R9
1K5
+5V
SYSRESET
Y1
40MHz
R10
0R
VCC
EN
OUT
GND
U5C
EPF81188AQC208-3
CLK_40
SYSCLK
RESET
SYSCLK
FPGA_RESET
AS
UDS
LDS
WRITE
FC0
FC1
FC2
IACKIN
D[15..0]
A[23..1]
DTACK_DRV
BERR_DRV
DBEN
DDIR
IACKOUT
IRQ_HI_DRV
IRQ_LO_DRV
REG_BASE0
REG_BASE1
REG_PRIV
ROM_BASE0
ROM_BASE1
ROM_EN
HOST
I/F
UNUSED I/O
U5J
EPF81188AQC208-3
I/O_ADD9
I/O
TP4
TP5
TP6
U6A
SN74LVC1G06DBV
U7A
SN74LVC1G06DBV
DTACK
BERR
U9A
SN74LVC1G06DBV
U10A
SN74LVC1G06DBV
IRQ STRAPS
IRQ6
IRQ5
IRQ4
IRQ3
IRQ2
R12 0R
R13 0R
R14 0R
R16 0R
R18 0R
RN2
10K
RN3
10K
GND
SW1
SW_DIP_x06
R11
10K
R15
10K
R17
10K
R19
10K
R20
10K
R21
10K
CONFIGURATION SWITCHES
POS FUNCTION
1 REG_BASE0
2 REG_BASE1
3 ROM_BASE0
4 ROM_BASE1
5 REG_PRIV
6 ROM_ENABLE
REFERENCE IRQS
HI IRQ5 KEYBOARD/MOUSE
LO IRQ3 VIDEO V BLANK, I2C
CHANGES TO IRQ STRAPS MUST BE SYNC'D WITH FPGA INTERRUPT LOGIC – IRQS ARE NOT SOFTWARE CONFIGURABLE
FREE FOR NON-COMMERCIAL USE
(C) TOM STOREY
Sheet: /FPGA host interface/
File: fpga_host.kicad_sch
Title: FPGA HOST INTERFACE
Size: A4
Date: 2025-07-30
Rev: 1
KiCad E.D.A. 9.0.3
Id: 8/18

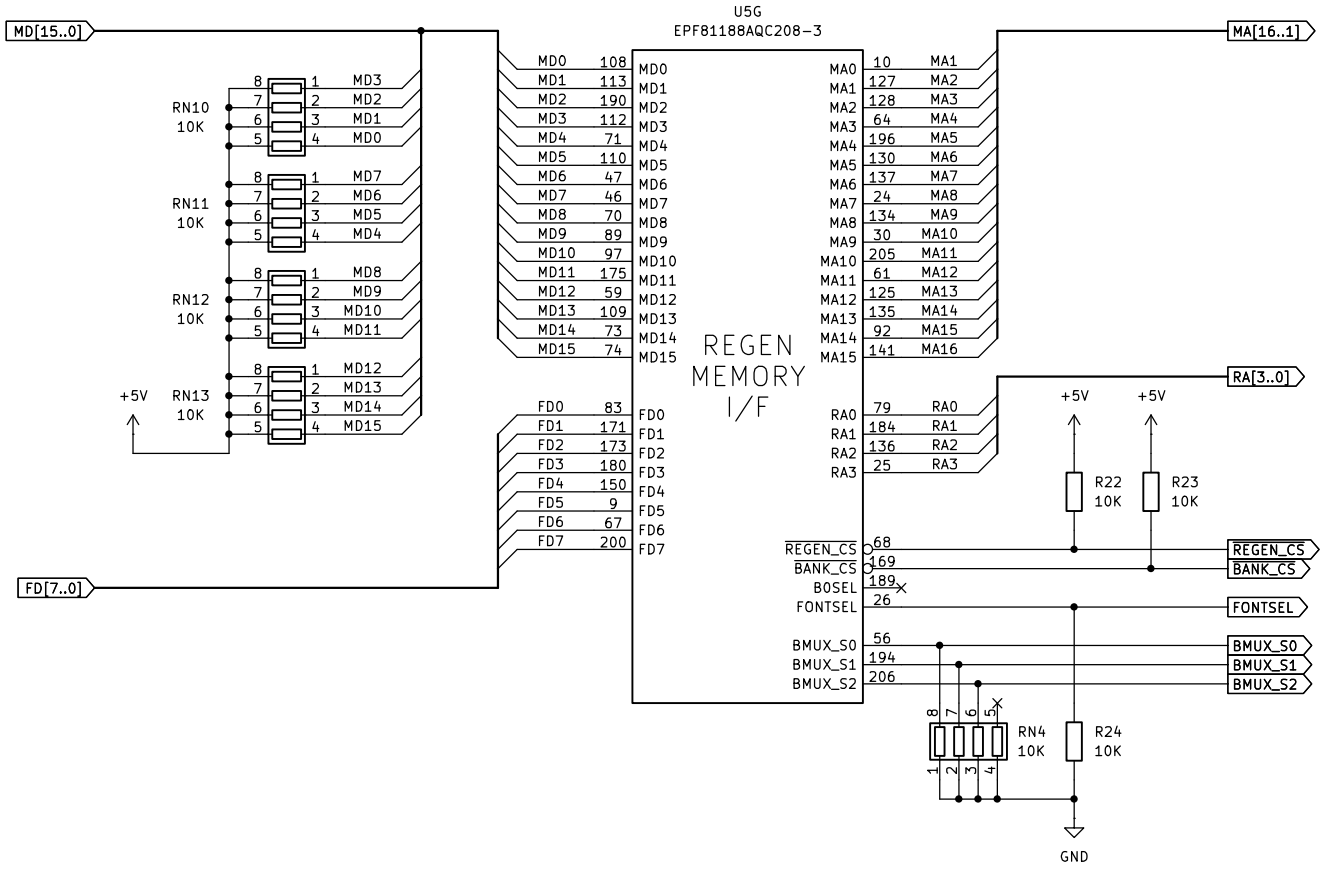

MUX SELECT BITS

S 210	CONNECTION(S)
000	ALL DISCONNECTED
001	CPU ACCESSES BANK 0, CRTC DISCONNECTED
011	CRTC ACCESSES BANK 0, CPU DISCONNECTED
110	CPU ACCESSES BANK 0, CRTC ACCESSES BANK 1
111	CPU ACCESSES BANK 1, CRTC ACCESSES BANK 0

FREE FOR NON-COMMERCIAL USE
(C) TOM STOREY

Sheet: /FPGA regen memory interface/
File: fpga_regen.kicad_sch

Title: FPGA REGEN MEMORY INTERFACE

Size: A4	Date: 2025-07-30	**Rev: 1**
KiCad E.D.A. 9.0.3		Id: 9/18

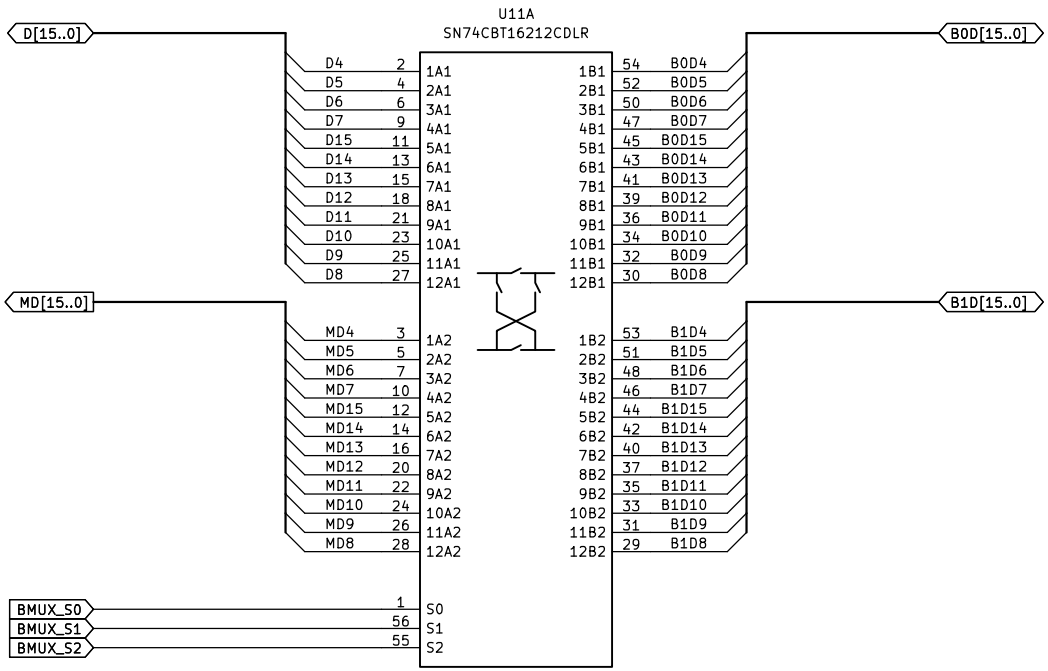

FREE FOR NON-COMMERCIAL USE
(C) TOM STOREY

Sheet: /Regen bus mux 1/
File: regen_bus_mux_1.kicad_sch

Title: REGEN BUS MUX 1/3

Size: A4	Date: 2025-07-30	**Rev: 1**
KiCad E.D.A. 9.0.3		Id: 10/18

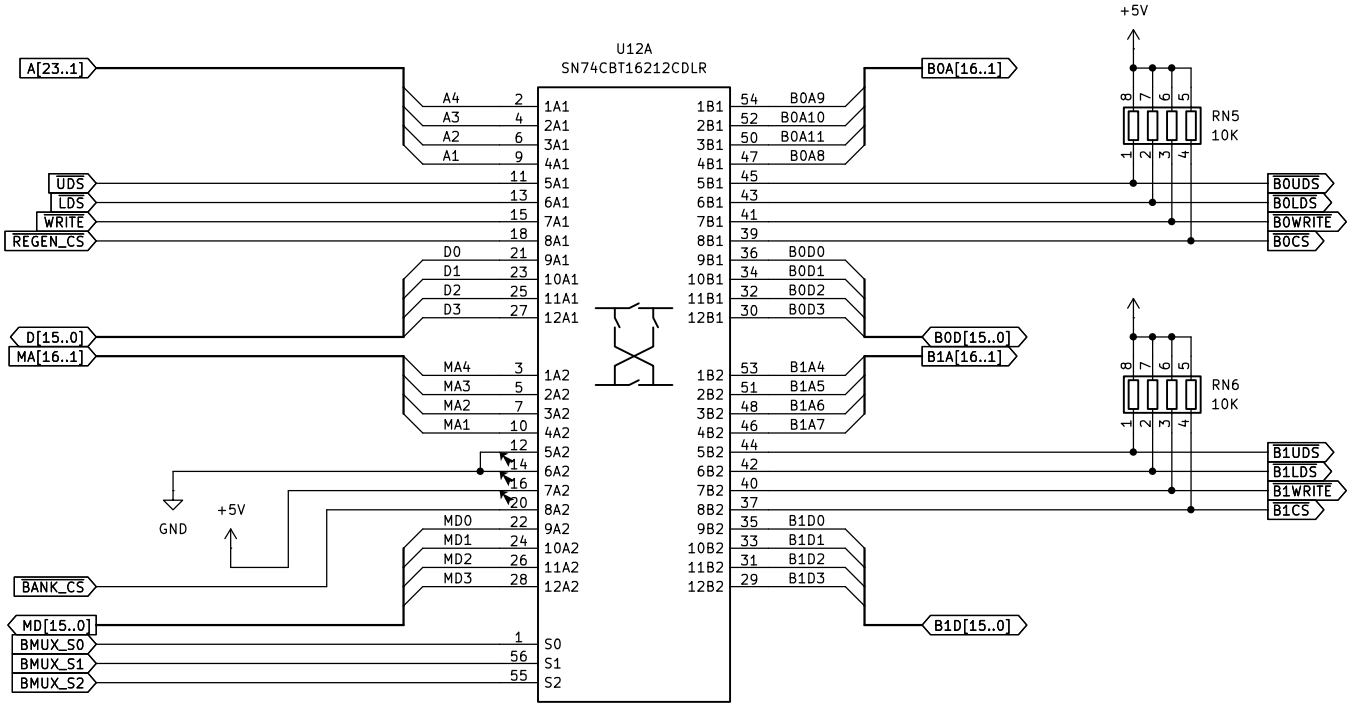

REGEN MEMORY CONTROL SIGNALS

CRTC AND FORMATTER:

$\overline{\text{WRITE}}$ IS DRIVEN HIGH BECAUSE THE CRTC ONLY EVER READS FROM REGEN MEMORY

$\overline{\text{xDS}}$ ARE DRIVEN LOW TO FORCE WORD READS FROM REGEN MEMORY

CPU:

SIGNALS ARE DRIVEN ACCORDING TO THE BUS CYCLE BEING EXECUTED

FREE FOR NON-COMMERCIAL USE
(C) TOM STOREY

Sheet: /Regen bus mux 2/
File: regen_bus_mux_2.kicad_sch

Title: REGEN BUS MUX 2/3

Size: A4	Date: 2025-07-30	**Rev: 1**
KiCad E.D.A. 9.0.3		Id: 11/18

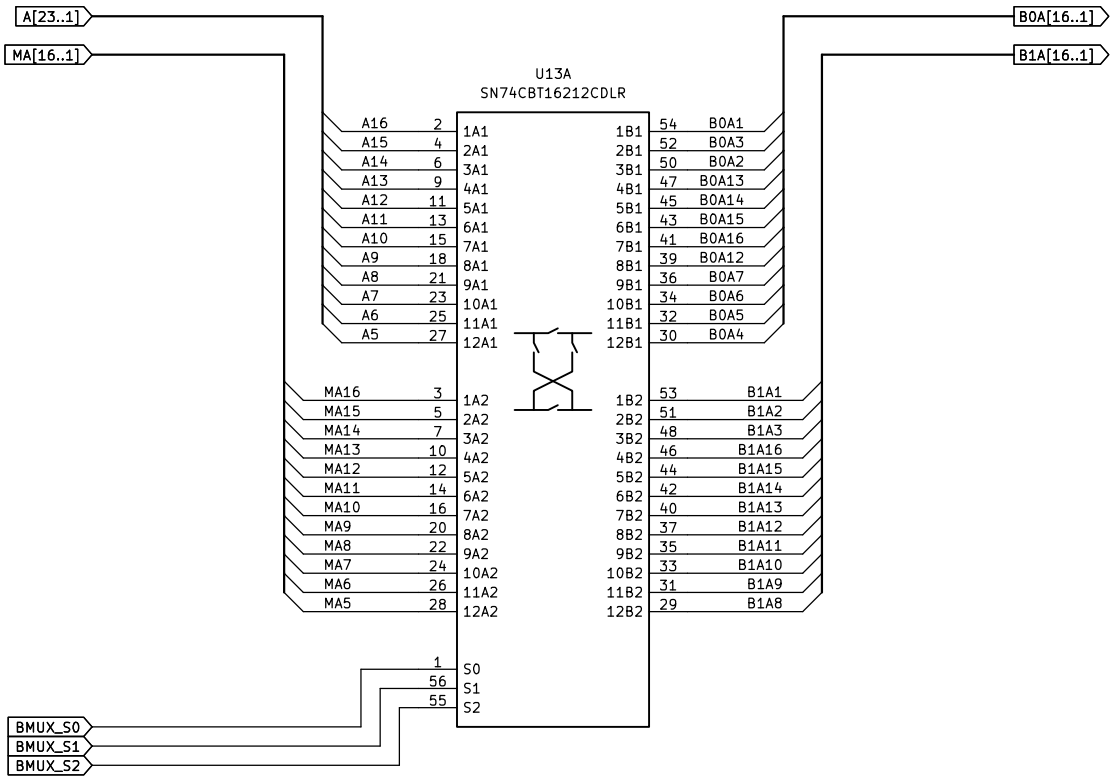

FREE FOR NON-COMMERCIAL USE
(C) TOM STOREY

Sheet: /Regen bus mux 3/
File: regen_bus_mux_3.kicad_sch

Title: REGEN BUS MUX 3/3

Size: A4	Date: 2025-07-30	**Rev: 1**
KiCad E.D.A. 9.0.3		Id: 12/18

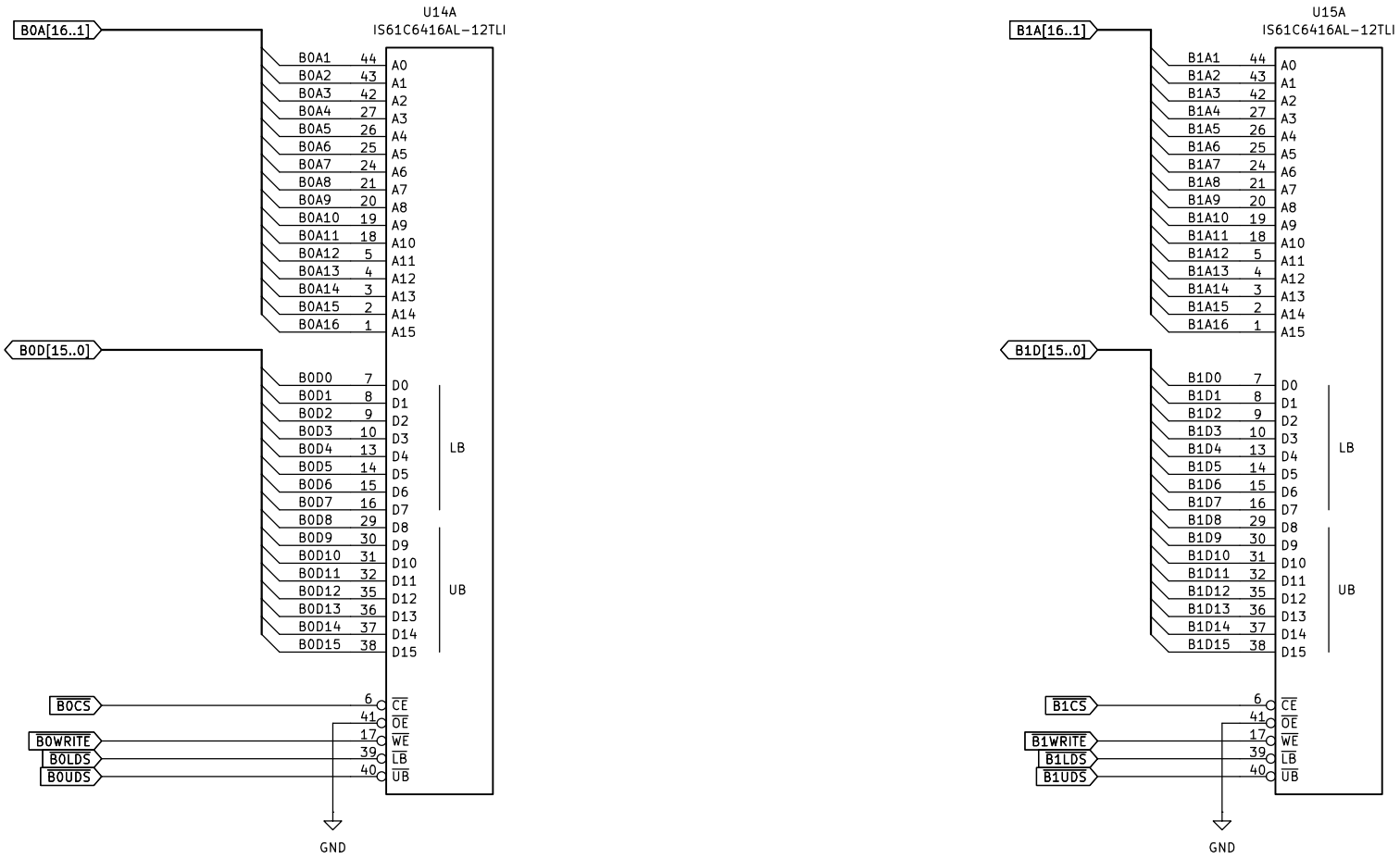

FREE FOR NON-COMMERCIAL USE
(C) TOM STOREY

Sheet: /Regen memory banks/
File: regen_mem.kicad_sch

Title: REGEN MEMORY BANKS

Size: A4	Date: 2025-07-30	**Rev: 1**
KiCad E.D.A. 9.0.3		Id: 13/18

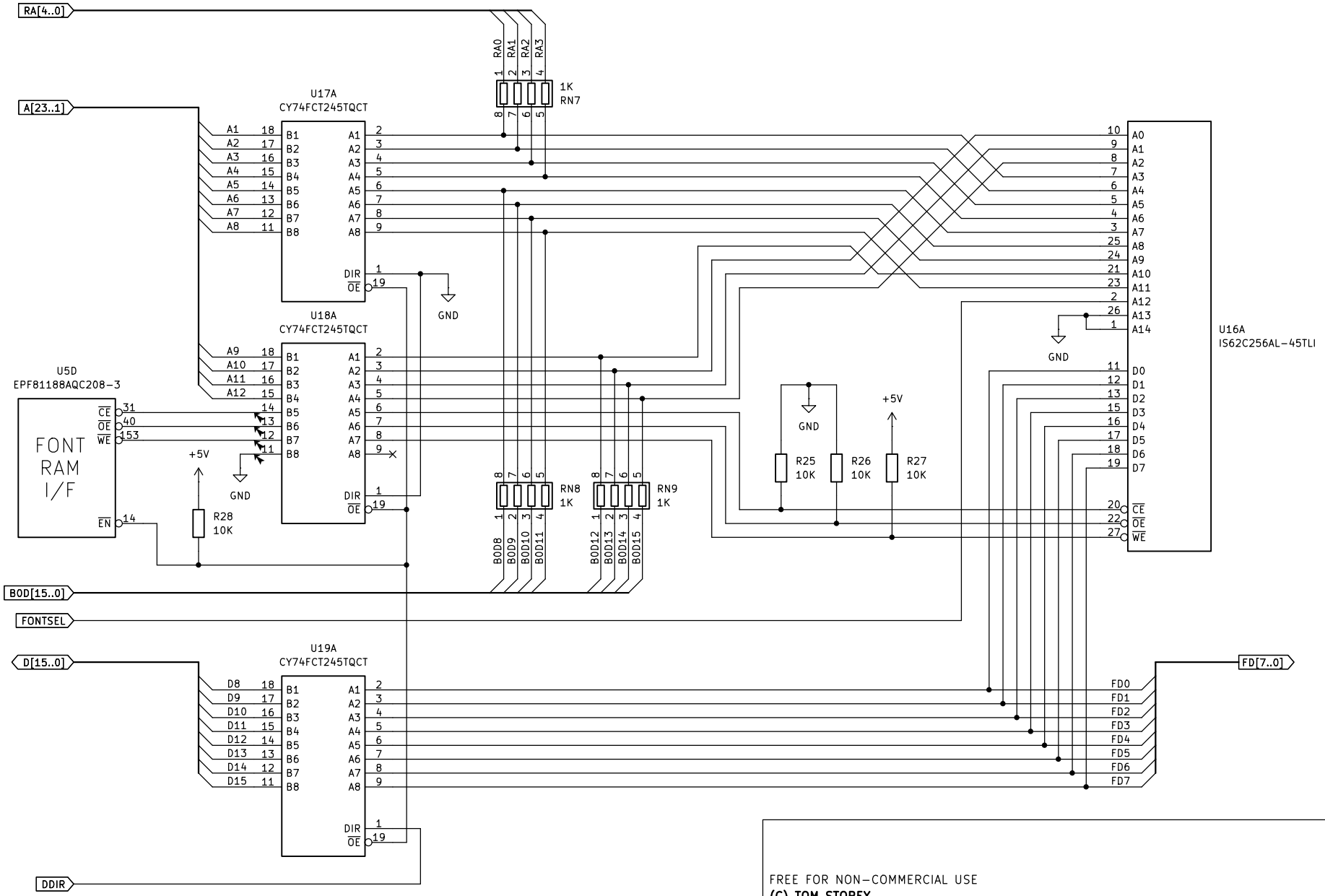

FREE FOR NON-COMMERCIAL USE
(C) TOM STOREY

Sheet: /Font RAM/
File: font_ram_2.kicad_sch

Title: FONT RAM

Size: A4	Date: 2025-07-30	**Rev: 1**
KiCad E.D.A. 9.0.3		Id: 14/18

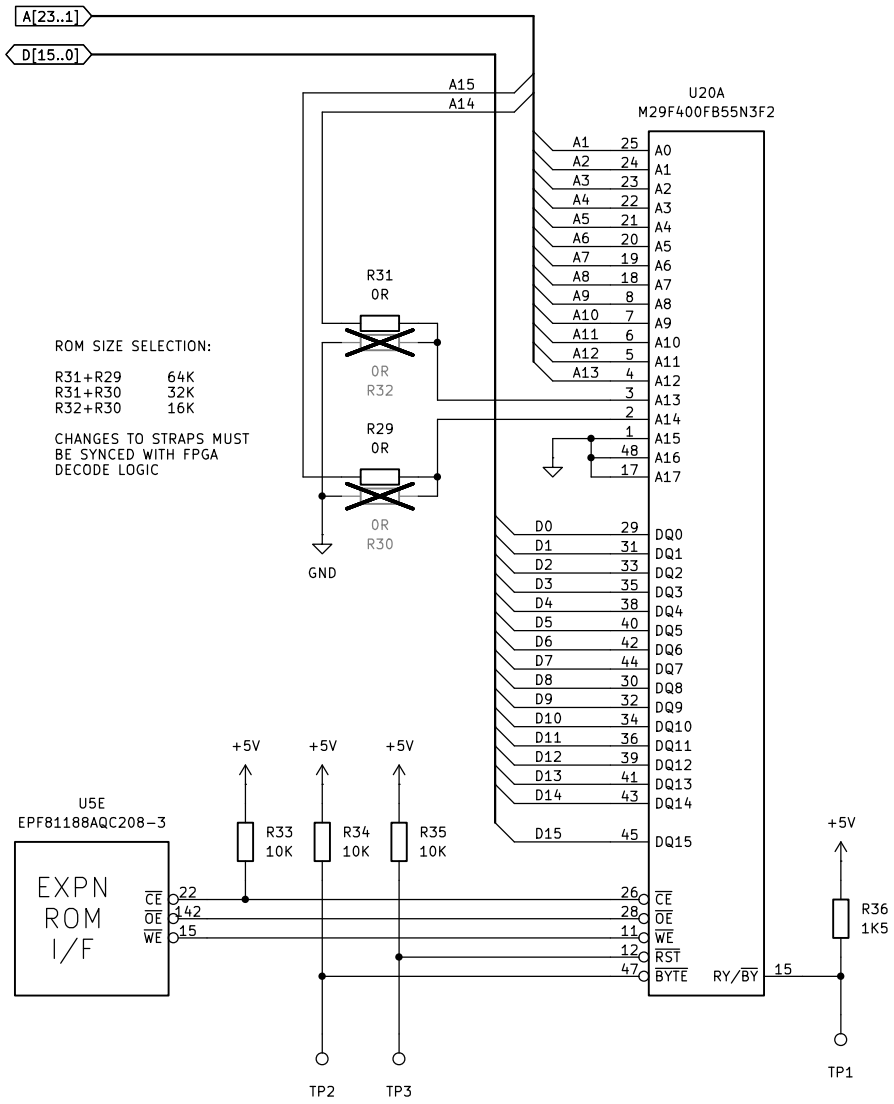

FREE FOR NON-COMMERCIAL USE
(C) TOM STOREY

Sheet: /Expansion ROM/
File: exp_rom.kicad_sch

Title: EXPANSION ROM

Size: A4	Date: 2025-07-30	**Rev: 1**
KiCad E.D.A. 9.0.3		Id: 15/18

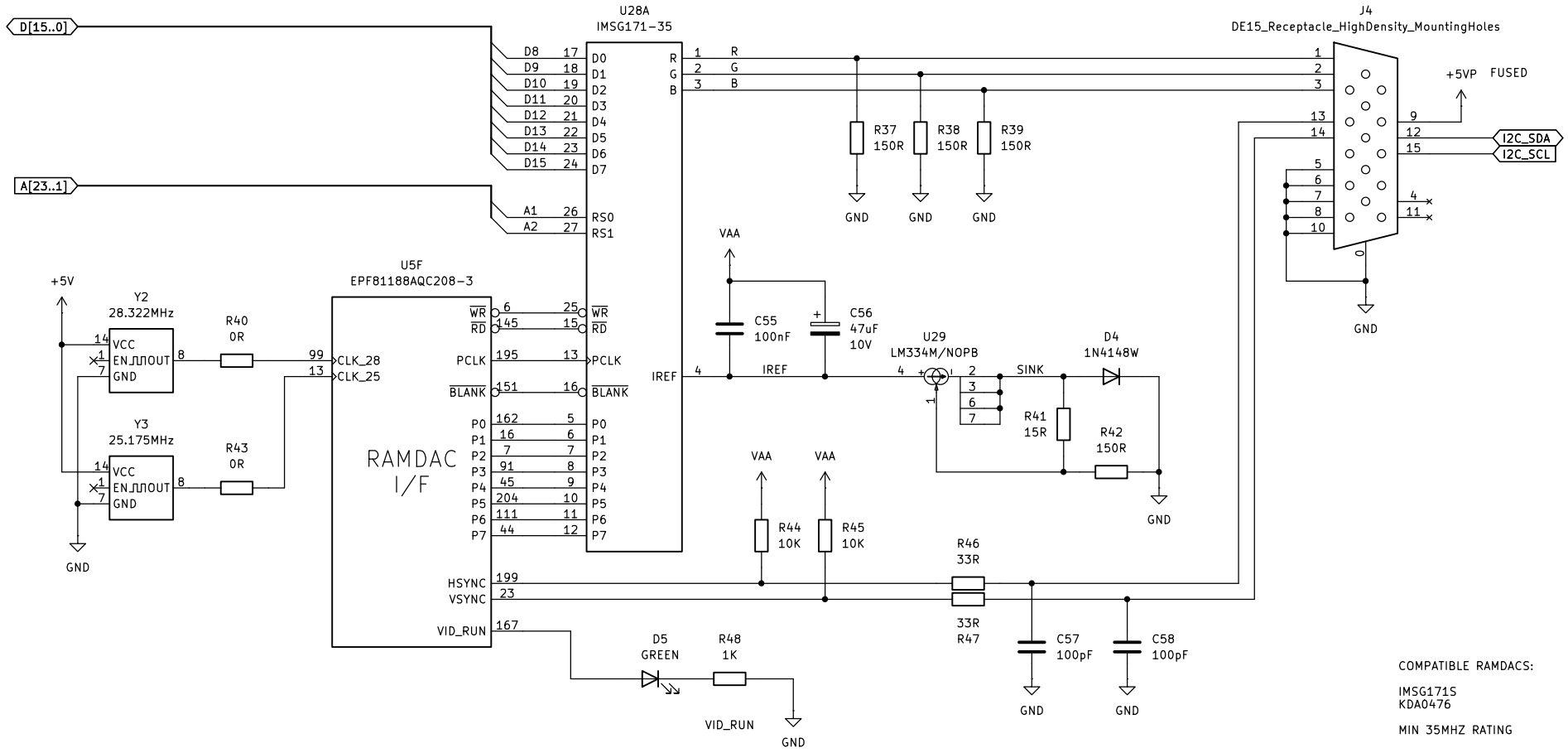

FREE FOR NON-COMMERCIAL USE

(C) TOM STOREY

Sheet: /RAMDAC/

File: ramdac.kicad_sch

Title: RAMDAC AND VIDEO CONNECTOR

Size: A4	Date: 2025-07-30	**Rev: 1**
KiCad E.D.A. 9.0.3		Id: 16/18

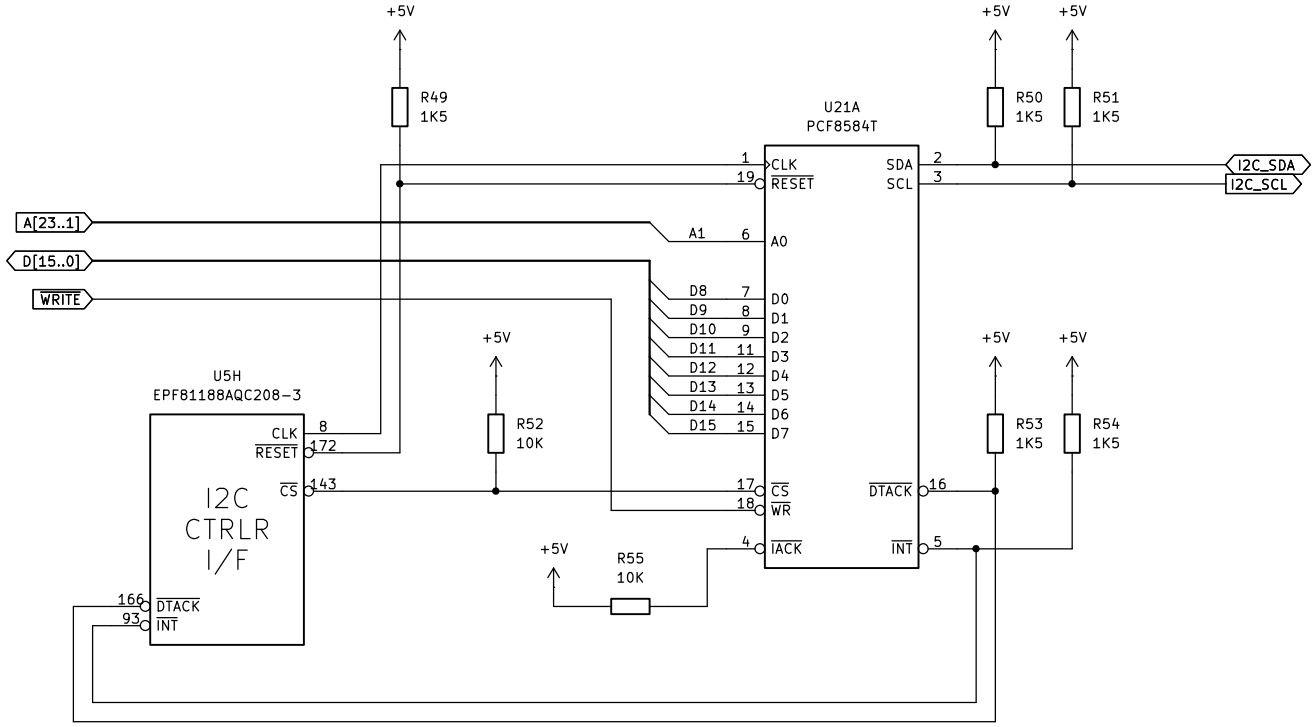

FREE FOR NON-COMMERCIAL USE
(C) TOM STOREY

Sheet: /I2C controller/
File: i2c.kicad_sch

Title: I2C CONTROLLER

Size: A4	Date: 2025-07-30	**Rev: 1**
KiCad E.D.A. 9.0.3		Id: 17/18

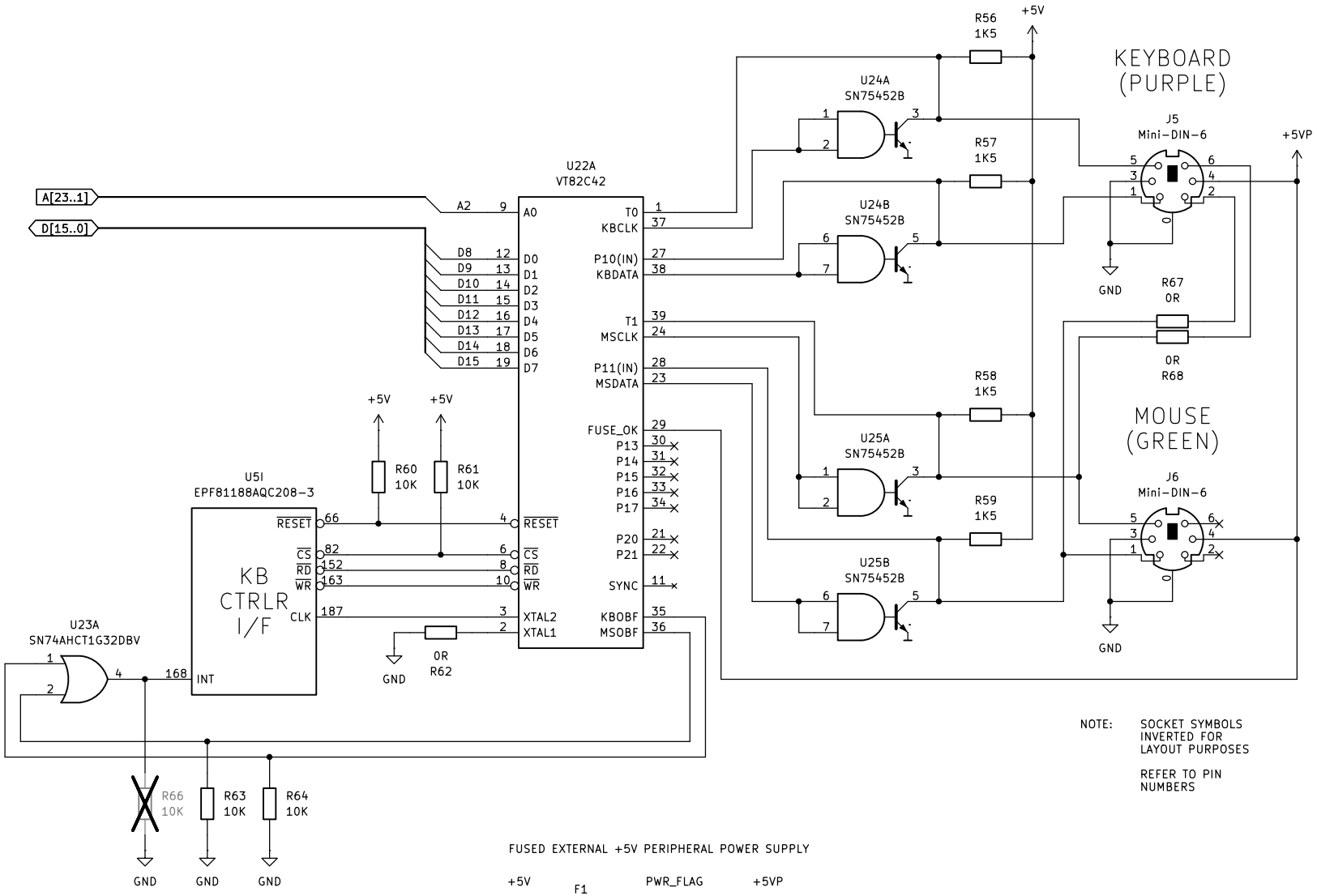

NOTE: SOCKET SYMBOLS INVERTED FOR LAYOUT PURPOSES

REFER TO PIN NUMBERS

FUSED EXTERNAL +5V PERIPHERAL POWER SUPPLY

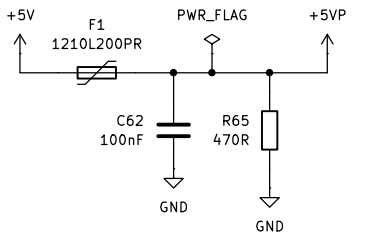

ALL COMPONENTS (EXCEPT +5VP POWER SUPPLY):

NOPOP IF KEYBOARD/MOUSE NOT USED

POPULATE R66 IF KEYBOARD/MOUSE NOT USED

+5VP POWER SUPPLY COMPONENTS TO ALWAYS BE POPULATED

FREE FOR NON-COMMERCIAL USE
(C) TOM STOREY

Sheet: /Keyboard controller/
File: keyboard.kicad_sch

Title: PS/2 KEYBOARD AND MOUSE CONTROLLER

Size: A4	Date: 2025-07-30	**Rev: 1**
KiCad E.D.A. 9.0.3		Id: 18/18