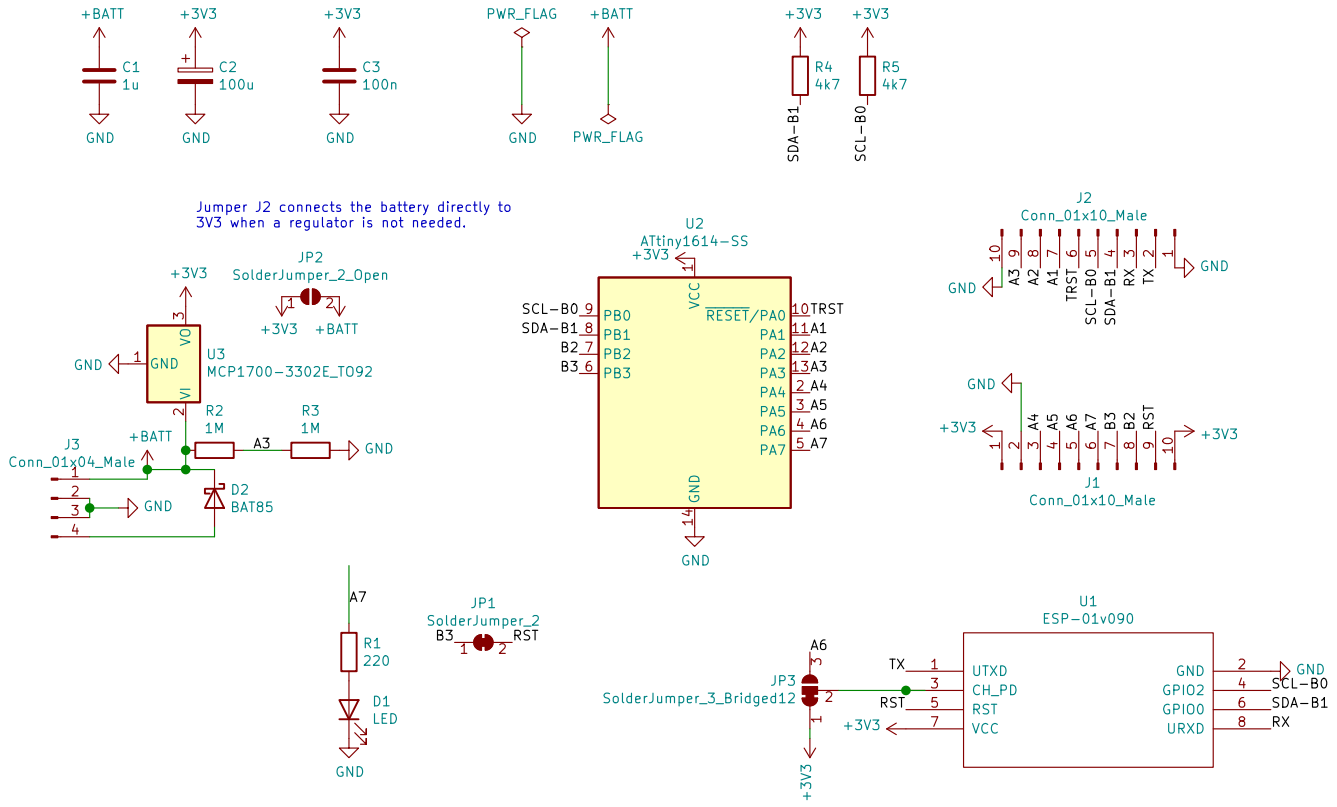

http://www.v7f.eu

Sheet: /

File: ESPTiny1614.sch

Title: ESP01 Attiny1614 board

Size: A4	Date: 2021-07-13	Rev: 1.0
KiCad E.D.A. eeschema 5.1.10-88a1d61d5890ubuntu20.04.1		Id: 1/1