FLUKE 6070A
6071A

6070A
6071A

Synthesized RF Signal Generators

Operator Manual

PN 577544
November 1980
©1980, John Fluke Mfg. Co., Inc., all rights reserved Litho in U.S.A.

FLUKE®

The Fluke Corporation is pleased to hereby grant GIDEP (Government-Industry Data Exchange Program) permission to reproduce the manuals listed in the attachment. Permission is granted on the condition that you legibly reproduce on the copies the legend "Reproduced With Permission".

It is our understanding from your request dated January 23, 2001, that the purpose for copying these manuals is to include them in the GIDEP database, and that the material won't be copied for any other purpose.

Thank you for your cooperation, and for your interest in Fluke.

Sincerely,

Beverly A. Summers
Paralegal
Fluke Corporation
Intellectual Property Law Dept.
Direct: (425) 446-5770 [voice]
(425) 446-5117 [fax]
beverly.summers@fluke.com [e-mail]

Table of Contents

SECTION	TITLE	PAGE
1	**INTRODUCTION AND SPECIFICATIONS**	**1-1**
	1-1. THE 6070A/6071A INSTRUCTION MANUAL SET	1-1
	1-4. THE 6070A/6071A OPERATOR MANUAL	1-2
	1-17. OPTIONS AND ACCESSORIES	1-4
	1-19. SPECIFICATIONS	1-4
2	**SHIPPING AND SERVICE INFORMATION**	**2-1**
	2-1. SHIPPING INFORMATION	2-1
	2-4. SERVICE INFORMATION	2-1
	2-5. Warranty	2-1
	2-7. Service	2-1
	2-9. ADDITIONAL INFORMATION	2-1
3	**INSTALLATION AND MAINTENANCE**	**3-1**
	3-1. INTRODUCTION	3-1
	3-3. MOUNTING: RACK OR BENCH	3-1
	3-5. INPUT LINE POWER	3-1
	3-7. RF EMISSION CONTROL	3-3
	3-9. IEEE-488	3-3
	3-10. Electrical Connection	3-3
	3-13. IEEE-488 INTERFACE Switches	3-3
	3-15. OPERATOR MAINTENANCE	3-4
	3-16. Fuse Replacement	3-4
	3-18. Changing Line Power Configuration	3-5
4	**FAMILIARIZATION**	**4-1**
	4-1. INTRODUCTION	4-1
	4-3. 6070A/6071A FRONT PANEL CONTROLS, CONNECTORS, AND INDICATORS	4-1
	4-5. 6070A/6071A REAR PANEL CONTROLS AND CONNECTORS	4-1
	4-7. FAMILIARITY EXERCISE	4-1
	4-8. Introduction	4-1
	4-10. Power On	4-1
	4-14. Keyboard Operations	4-2
	4-16. EDIT Operations	4-4
	4-18. FREQ STEP Operations	4-5
	4-20. Relative Frequency and Relative Amplitude Operations	4-5
5	**LOCAL OPERATION**	**5-1**
	5-1. INTRODUCTION	5-1
	5-3. KEYBOARD OPERATIONS	5-1

(continued on page ii)

TABLE OF CONTENTS, *continued*

SECTION	TITLE	PAGE
	5-5. EDIT KNOB OPERATIONS	5-2
	5-7. MODULATION OPERATIONS	5-2
	5-9. SWEEP OPERATIONS	5-3
	5-11. RELATIVE OPERATIONS	5-3
	5-13. RF OUTPUT OPERATION	5-3
	5-15. INTERROGATE OPERATION	5-3
	5-17. RETURN TO LOCAL OPERATION	5-3
5A	**FREQUENCY OPERATIONS**	**5A-1**
	5A-1. INTRODUCTION	5A-1
	5A-3. SWITCHING CHARACTERISTICS	5A-1
	5A-5. FREQUENCY CIRCUITRY	5A-2
	5A-7. FREQUENCY KEYBOARD OPERATIONS	5A-2
	5A-9. FREQUENCY EDIT OPERATIONS	5A-3
	5A-11. FREQUENCY SWEEP OPERATIONS	5A-3
	5A-12. Introduction	5A-3
	5A-19. Auxiliary Outputs	5A-5
	5A-21. Sweep Width Keyboard Operation	5A-5
	5A-23. Sweep Increment Keyboard Operation	5A-5
	5A-25. Sweep Symmetry Keyboard Operation	5A-6
	5A-27. Sweep Speed Keyboard Operation	5A-6
	5A-29. AUTO Sweep Operation	5A-6
	5A-31. SINGLE Sweep Operation	5A-6
	5A-33. MANUAL Sweep Operation	5A-7
	5A-35. FREQUENCY STEP KEYBOARD OPERATIONS	5A-9
	5A-37. RELATIVE FREQUENCY OPERATION	5A-9
	5A-40. FIXED RANGE OPERATION	5A-9
5B	**AMPLITUDE OPERATIONS**	**5B-1**
	5B-1. INTRODUCTION	5B-1
	5B-8. AMPLITUDE SWITCHING CHARACTERISTICS	5B-1
	5B-10. AMPLITUDE KEYBOARD OPERATION	5B-2
	5B-12. AMPLITUDE EDIT OPERATION	5B-3
	5B-15. RELATIVE AMPLITUDE OPERATIONS	5B-3
	5B-16. Introduction	5B-3
	5B-19. Volts Relative to a Reference in Volts Operation	5B-4
	5B-21. dB Relative to a Reference in Volts Operation	5B-5
	5B-23. Volts Relative to a Reference in dB Operation	5B-6
	5B-25. dBm Relative to a Reference in dB Operation	5B-7
	5B-27. FIXED RANGE OPERATION	5B-8
5C	**MODULATION OPERATIONS**	**5C-1**
	5C-1. INTRODUCTION	5C-1
	5C-5. MODULATION FREQUENCY OPERATION	5C-1
	5C-6. Introduction	5C-1
	5C-11. Modulation Frequency Keyboard Operation	5C-2
	5C-13. Modulation Frequency Edit Operation	5C-2
	5C-15. AMPLITUDE MODULATION OPERATIONS	5C-2
	5C-16. Introduction	5C-2
	5C-20. AM Percentage Keyboard Operation	5C-2
	5C-22. AM Percentage Edit Operation	5C-3
	5C-24. Enable AM Operation	5C-3
	5C-26. LIMITED PULSE MODULATION	5C-3
	5C-28. ANGLE MODULATION MODES	5C-3
	5C-29. Introduction	5C-3
	5C-31. HI DEV Mode Operation	5C-3

(continued on page iii)

TABLE OF CONTENTS, *continued*

SECTION	TITLE	PAGE
	5C-33. DCFM Mode Operation	5C-3
	5C-35. Angle Modulation Operations	5C-4
	5C-48. FIXED RANGE OPERATION	5C-6
5D	**MEMORY OPERATIONS**	**5D-1**
	5D-1. INTRODUCTION	5D-1
	5D-5. CREATING A LISTING OF FRONT PANEL SETUPS	5D-1
	5D-7. RECALLING A FRONT PANEL SETUP	5D-2
	5D-9. VALID MEMORY LOCATION ENTRIES	5D-2
5E	**MISCELLANEOUS OPERATIONS**	**5E-1**
	5E-1. INTRODUCTION	5E-1
	5E-3. RF OUTPUT OPERATION	5E-1
	5E-5. POWER OPERATION	5E-1
	5E-6. Introduction	5E-1
	5E-8. Power On	5E-2
	5E-10. Standby to Operate	5E-2
	5E-13. SPECIAL FUNCTION OPERATION	5E-4
	5E-16. INTERROGATE OPERATION	5E-4
	5E-17. Introduction	5E-4
	5E-19. Displaying Rejected Entry Error Codes	5E-4
	5E-22. Displaying Uncalibrated Error Codes	5E-4
	5E-25. BUS STATUS OPERATIONS	5E-4
	5E-26. Introduction	5E-5
	5E-28. Return to Local	5E-5
	5E-30. Bus Address Display	5E-5
6	**REMOTE (IEEE-488, 1978) OPERATION**	**6-1**
	6-1. INTRODUCTION	6-1
	6-6. INTERFACE WAIT TIME	6-3
	6-8. IEEE-488 INTERFACE BUS CONNECTION	6-4
	6-10. IEEE-488 BUS ADDRESS	6-4
	6-14. REMOTE/LOCAL OPERATION	6-6
	6-21. LOCAL MESSAGES	6-6
	6-22. Introduction	6-6
	6-24. Listen-only	6-7
	6-25. Request Service	6-7
	6-28. Return to Local	6-7
	6-30. INTERFACE MESSAGES	6-7
	6-31. Introduction	6-7
	6-33. Remote Interface Message	6-7
	6-35. Local Interface Message	6-8
	6-37. Local Lockout Interface Message	6-8
	6-39. Clear Local Lockout Interface Message	6-8
	6-41. Device Clear Interface Message	6-8
	6-43. Select Device Clear Interface Message	6-9
	6-45. Interface Clear Interface Message	6-9
	6-47. Service Request Interface Message	6-9
	6-49. Serial Poll Enable and Serial Poll Disable Interface Messages	6-9
	6-51. DEVICE DEPENDENT MESSAGES	6-9
	6-52. Introduction	6-9
	6-54. Program Data Messages	6-10
	6-57. Status Messages	6-10
	6-59. Message Terminators	6-10
	6-61. IEEE-488 Alphabet	6-11
	6-63. COMMAND SUMMARY TABLE	6-11

(continued on page iv)

TABLE OF CONTENTS, *continued*

SECTION	TITLE	PAGE
6A	**6070A/6071A COMMANDS**	**6A-1**
6A-1.	INTRODUCTION	6A-1
6A-6.	SYNTAX	6A-1
6A-7.	Introduction	6A-1
6A-9.	Syntax Diagrams	6A-1
6A-11.	Numeric Data	6A-3
6A-23.	Suffix	6A-6
6A-25.	CLEAR COMMANDS - CB AND CL	6A-6
6A-27.	SRQ COMMANDS - THE IM AND SM COMMANDS	6A-7
6A-28.	Introduction	6A-7
6A-30.	SRQ Operation	6A-8
6A-35.	The IM Command	6A-9
6A-37.	The SM Command	6A-10
6A-39.	IEEE-488 INTERFACE MODES - THE @ COMMAND	6A-10
6A-41.	BINARY LEARN MODES - LI AND LM COMMANDS	6A-12
6A-42.	Introduction	6A-12
6A-44.	The LI Command	6A-12
6A-46.	The LM Command	6A-13
6A-48.	Encoding and Decoding the Learn String	6A-13
6A-86.	TRIGGER - CT AND TR COMMANDS	6A-25
6A-88.	INTERROGATE - THE IM, IO, IR, IT, IU, AND IV COMMANDS	6A-25
6A-90.	REL FREQ CONTROL EQUIVALENT - THE RF COMMAND	6A-27
6A-92.	REL AMPL CONTROL EQUIVALENT - THE RA COMMAND	6A-27
6A-94.	RF OUTPUT CONTROL EQUIVALENT - THE RO COMMAND	6A-28
6A-96.	FUNCTION CONTROLS EQUIVALENTS - THE FUNCTION COMMANDS	6A-28
6A-97.	Introduction	6A-28
6A-99.	AM FUNCTION Control Equivalent - The AM Command	6A-28
6A-101.	AMPL FUNCTION Control Equivalent - The AP Command	6A-29
6A-103.	FREQ FUNCTION Control Equivalent - The FR Command	6A-30
6A-105.	FM/0M FUNCTION Control Equivalent - The FM Command	6A-30
6A-107.	FREQ STEP FUNCTION Control Equivalent - The FS Command	6A-31
6A-109.	MOD FREQ FUNCTION Control Equivalent - The MF Command	6A-31
6A-111.	SWP INCR FUNCTION Control Equivalent - The SI Command	6A-32
6A-113.	SHIFT FUNCTION Control Equivalent - The SP Command	6A-32
6A-115.	SWP WIDTH FUNCTION Control Equivalent - The SW Command	6A-33
6A-117.	FREQ STEP CONTROL EQUIVALENTS - THE SD AND SU COMMANDS	6A-33
6A-119.	MEMORY CONTROL EQUIVALENTS - THE MEMORY COMMANDS	6A-34
6A-121.	EDIT CONTROL EQUIVALENTS - THE EDIT COMMANDS	6A-35
6A-122.	Introduction	6A-35
6A-124.	Edit Commands that Position the Bright Digit	6A-35
6A-126.	Edit Commands that Edit the Bright Digit	6A-37
6A-128.	MODULATION CONTROL EQUIVALENTS - THE MODULATION COMMANDS	6A-38
6A-130.	SWEEP CONTROLS EQUIVALENTS	6A-38
6A-132.	MONITOR COMMAND	6A-39
6A-133.	Introduction	6A-39
6A-135.	Read Memory Word and Byte - The RW and RB Commands	6A-40
6A-138.	Write Memory Word and Byte - The DW, WW, and WB Commands	6A-40
6A-141.	Read I/O Port Bit - The IB Command	6A-41
6A-144.	Modifying a Single I/O Port Bit - The DO and OB Commands	6A-41
6A-147.	Modifying a Group of Bits - The DO, OC, and OM Commands	6A-42
6A-150.	Modifying the Contents of Select DACs- The OD Command	6A-43
6A-153.	Read the Current Value of Attenuation - The XA Command	6A-44

(continued on page v)

TABLE OF CONTENTS, *continued*

SECTION	TITLE	PAGE
	6A-156. Change the Value of Attenuation - The XB Command	6A-44
	6A-159. Change the Frequency Hardware Directly - The XD Command	6A-45
	6A-161. Local - Operation - Alert Interrupt Mode - The XF Command	6A-45
	6A-163. Mod/Divider RF ON/OFF - The XR Command	6A-46
	6A-165. PROGRAMMING EXAMPLES	6A-46
6B	**6070A/6071A IEEE-488 INTERFACE BUS MESSAGE SYNTAX**	**6B-1**
	6B-1. INTRODUCTION	6B-1
	6B-5. 6070A/6071A INTERFACE BUS MESSAGE SYNTAX DEFINITION CONVENTIONS	6B-1
	6B-6. Introduction	6B-1
	6B-8. 6070A/6071A IEEE-488 Interface Character Set	6B-1
	6B-10. Notation Conventions	6B-2
	6B-12. General Structure of the 6070A/6071A Device Dependent Messages	6B-2
	6B-14. 6070A/6071A IEEE-488 INTERFACE BUS MESSAGE SYNTAX LISTING	6B-2
7	**ACCESSORY AND OPTION INFORMATION**	**7-1**
7A	**607XA-130 OVEN REFERENCE OPTION**	**7A-1**
	7A-1. INTRODUCTION	7A-1
	7A-3. SPECIFICATIONS	7A-1
	7A-5. OPERATION	7A-1
7B	**607XA-570 NON-VOLATILE MEMORY OPTION**	**7B-1**
	7B-1. INTRODUCTION	7B-1
	7B-3. OPERATION	7B-1
7C	**607XA-830 REAR RF OUTPUT OPTION**	**7C-1**
	7C-1. INTRODUCTION	7C-1
	7C-3. SPECIFICATIONS	7C-1
	7C-5. OPERATION	7C-1
7D	**607XA-870 REVERSE POWER PROTECTION OPTION**	**7D-1**
	7D-1. INTRODUCTION	7D-1
	7D-3. SPECIFICATIONS	7D-1
	7D-5. OPERATION	7D-1
A	**JOHN FLUKE SALES REPRESENTATIVES AND SERVICE CENTERS**	**A-1**

List of Tables

TABLE	TITLE	PAGE
1-1.	Sources for Modulation Combinations	1-4
1-2.	6070A/6071A Accessories and Options	1-5
1-3.	6070A/6071A Specifications	1-7
3-1.	Rack Mounting Accessories, Y6001	3-2
3-2.	IEEE-488 Cable Accessories	3-4
3-3.	IEEE-488 Address	3-5
5A-1.	Frequency Bands	5A-1
5A-2.	Sweep Speed Special Functions	5A-6
5B-1.	Amplitude Range and Resolution Characters	5B-2
5C-1.	Maximum Angle Modulation Index	5C-4
5C-2.	FM Deviation Ranges (kHz DEV)	5C-5
5C-3.	Phase Modulation Deviation Ranges (Rad)	5C-5
5E-1.	Self-Test Error Code Interpretation	5E-3
5E-2.	Front Panel Control Check	5E-8
6-1.	List of 6070A and 6071A Interface Functions	6-2
6-2.	Typical Delay Times (ms), in Excess of 5 ms, After Enabling FM	6-3
6-3.	Typical Delay Times (ms), is Excess of 5 ms, After Ranging FM	6-4
6-4.	IEEE-488 Conversion	6-5
6-5.	Summary of 6070A.6071A Commands and IEEE-488 Interface Messages	6-11
6A-1.	Arrangements of Commands in Section 6A	6A-2
6A-2.	Pseudo-Hexadecimal Conversion Table	6A-14
7-1.	6070A/6071A Accessories and Options	7-1
A-1.	Fluke Technical Service Centers - U.S. and Canada	A-2
A-2.	Fluke Technical Service Centers - International	A-2
A-3.	Sales Representatives - U.S. and Canada	A-4
A-4.	Sales Representatives - International	A-5

List of Illustrations

FIGURE	TITLE	PAGE
Frontispiece	6070A/6071A Synthesized RF Signal Generators	x
1-1.	6070A/6071A Instruction Manual Set	1-1
3-1.	Rack Mounting Accessories, Y6001	3-2
3-2.	IEEE-488 Connector	3-4
3-3.	Main Power Fuse and Line Voltage Selection Switch	3-6
4-1.	POWER, MODULATION, MODE, and BUS STATUS Controls, Connectors, and Indicators	4-6
4-2.	Displays	4-8
4-3.	EDIT, SWEEP, and RF OUTPUT Controls, Connectors, and Indicators	4-10
4-4.	Keyboard	4-12
4-5.	6070A/6071A Rear Panel Features	4-14
5A-1.	Sweep Width, Sweep Increment, and Sweep Speed	5A-4
5A-2.	Sweep Symmetry	5A-4
5A-3.	AUTO Sweep Timing	5A-7
5A-4.	SINGLE Sweep Timing	5A-8
5B-1.	Volts Relative to a Reference in Volts Operation	5B-4
5B-2.	Volts Relative to a Reference in dB Operation	5B-6
5E-1.	POWER Operation	5E-1
5E-2.	Special Functions	5E-6
5E-3.	Error Code Interpretation with the REJ ENT Annunciator On	5E-10
5E-4.	Error Code Interpretation with the UNCAL Annunciator On	5E-12
6-1.	IEEE Bus Message Organization	6-2
6-2.	Example Program Data Message	6-10
6A-1.	Syntax Diagram Convention	6A-3
6A-2.	Serial Poll Status Byte and Mask	6A-8
6A-3.	Example Binary Learn String	6A-15
6A-4.	Amplitude Coding	6A-19
6A-5.	Modulation Frequency Coding	6A-20
6A-6.	Angle Modulation Coding	6A-21
6A-7.	Instrument Display Status Message Coding	6A-22
6A-8.	Special Function Coding	6A-24
6A-10.	Programming Example 1	6A-46
6A-11.	Programming Example 2	6A-47
6A-12.	Programming Example 3	6A-47
	6070A Synthesized RF Signal Generator Front Panel	Foldout

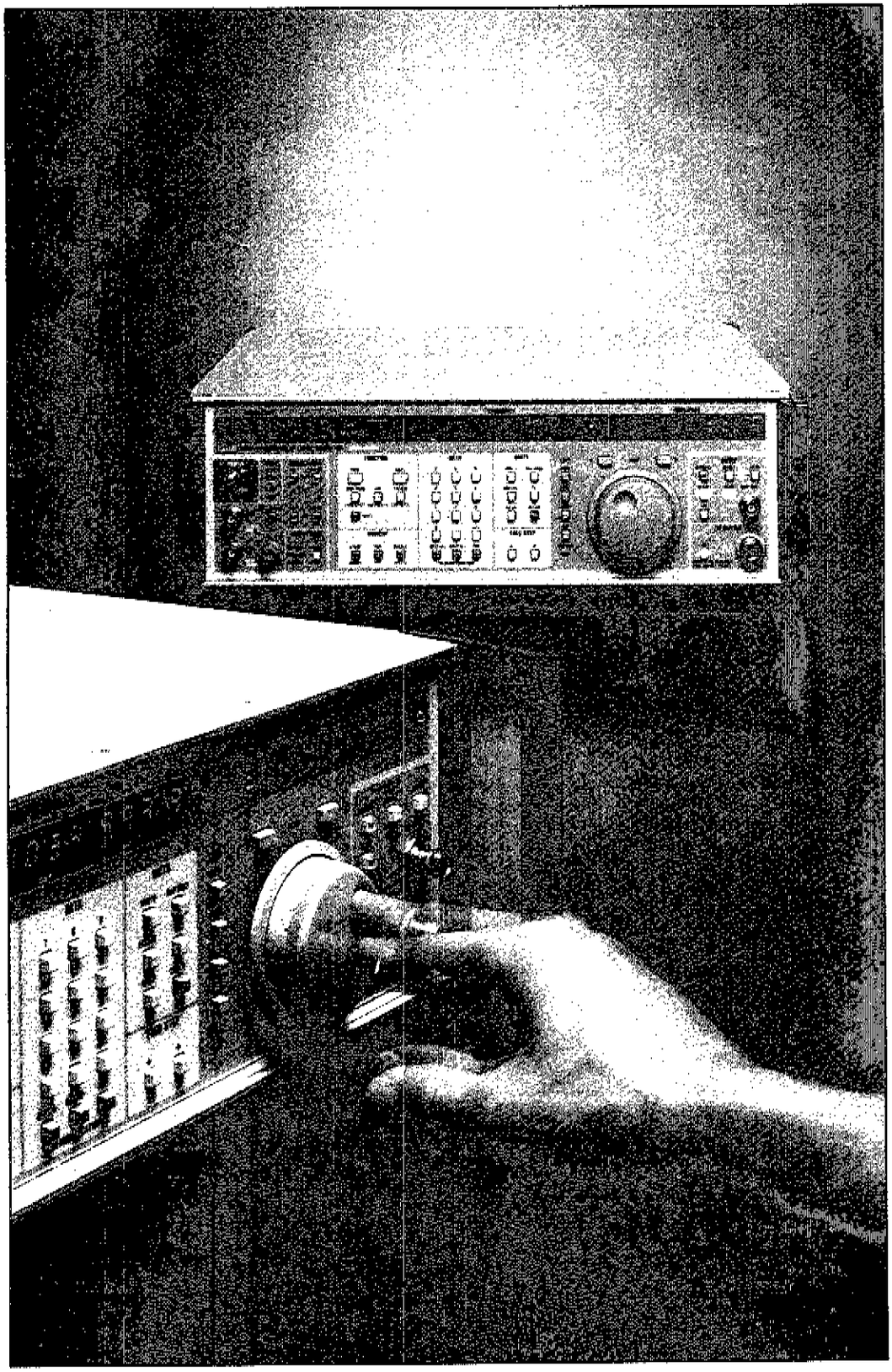

6070A/6071A Synthesized RF Signal Generators

Section 1
Introduction and Specifications

1-1. THE 6070A/6071A INSTRUCTION MANUAL SET

1-2. The John Fluke Models 6070A and 6071A RF Synthesized Signal Generators are documentated by a set of four manuals: the 6070A/6071A Operator Manual, the 6070A/6071A Calibration Manual, the 6070A/6071A Service Manual, and the 6070A/6071A Schematic Manual (Figure 1-1). The 6070A/6071A Operator Manual introduces the operator to the instrument; familiarizes the operator with all instrument controls, connectors, and indicators; and presents detailed operating information and procedures for both manual (local) and systems (remote) operation. The 6070A/6071A Calibration Manual provides procedures for general maintenance, performance checks, and calibration adjustments. The 6070A/6071A Service Manual contains a description of the theory of operation, troubleshooting procedures, and a list of replaceable parts. The 6070A/6071A Schematic Manual contains schematic digrams, wire lists, interconnects diagrams, and an overall basic block diagram of the instrument.

1-3. The major difference between the two models is that the 6071A has twice the upper frequency limit of the 6070A. Because of their similarity, most of the text in this manual will apply to both models. Text that applies to just the 6070A or just the 6071A will be identified as such.

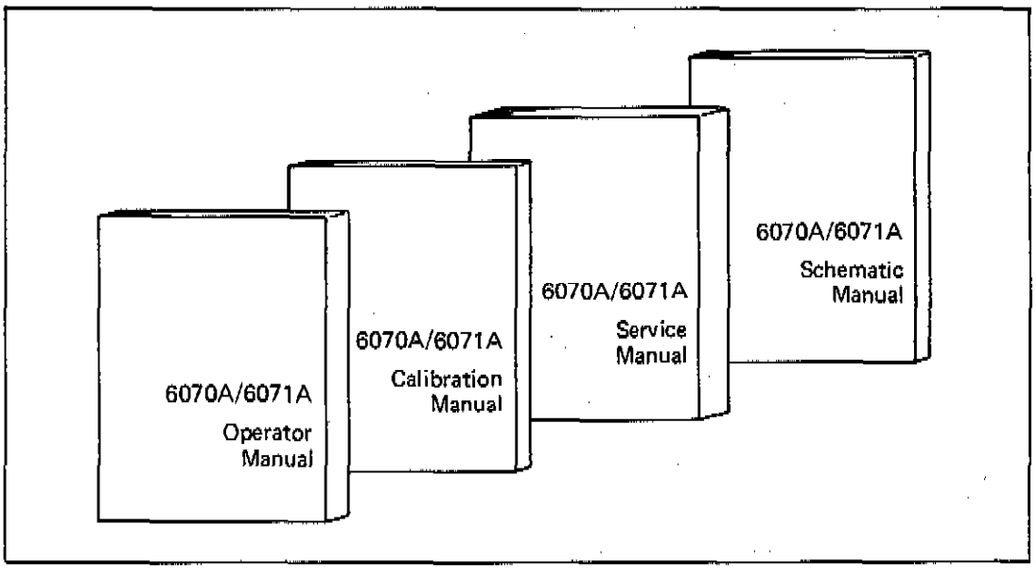

Figure 1-1. 6070A/6071A Instruction Manual Set

1-4. THE 6070A/6071A OPERATOR MANUAL

1-5. The information in this, the 6070A/6071A Operator Manual, is divided into 7 sections:

1 INTRODUCTION AND SPECIFICATIONS	Introduces the 6070A/6071A Instruction Manual Set and the 6070A and 6071A RF Synthesized Signal Generators. Lists the specifications for both the 6070A and the 6071A.
2 SHIPPING AND SERVICE INFORMATION	Describes how to ship the instrument and how to get problems corrected.
3 INSTALLATION AND MAINTENANCE	Describes how to physically install the instrument -- including connecting line power and the IEEE-488 interface -- and how to perform operator maintenance.
4 FAMILIARIZATION	Describes the location and function of each control, connector, indicator, and annunciator; and presents an exercise to familiarize the operator with the instrument (this exercise also provides a gross check of instrument function).
5 LOCAL OPERATION	Describes manual (front panel) operation of the instrument.
6 REMOTE OPERATION (IEEE-488, 1978)	Describes system operation via the IEEE-488 interface.
7 ACCESSORY AND OPTION INFORMATION	Describes each accessory briefly and describes the capabilities and operation of each option.

1-6. THE 6070A/6071A SYNTHESIZED RF SIGNAL GENERATOR

1-7. The John Fluke Models 6070A and 6071A Synthesized RF Signal Generators are designed for use in the calibration laboratory, engineering laboratory, or manufacturing environments. Both models offer extensive modulation capabilities and use phase-locked loop circuitry to generate fully synthesized signals with extremely low discrete spurious, and phase noise. These versatile instruments are intended for both bench and systems use. When the instrument is used in a system, all front panel control functions (except POWER and MOD OUT level) can be controlled via an IEEE-488, 1978, interface.

1-8. Instrument parameters, such as output frequency and amplitude, can be programmed to specific values or manually adjusted using the Edit Knob (large knob near the lower right corner of the front panel). The Edit Knob is connected to a digital rotary encoder to provide the same continuous manual adjustment capability that an analog tuning control provides, but with the positive positioning of a digital control. The rotary encoder has 25 magnetic detent positions. The user can feel each position of the Edit Knob.

1-9. The major difference between the two models is that the 6071A has twice the output frequency of the 6070A. The output frequency of the 6070A can be selected within 1 Hz

over a range from 200 kHz to 519.999999 Mhz (520 MHz). The output frequency of the 6071A can be selected within 1 Hz from 200 kHz to 520 MHz and within 2 Hz from 520 MHz to 1039.999998 MHz (1040 MHz). Both models can produce frequencies outside of the specified ranges, but the performance is not guaranteed.

1-10. The UNCAL annunciator will turn on to indicate that the instrument is operating beyond specified ranges. The synthesized RF signal is available at the front panel RF OUTPUT connector (if the 607XA-830 Rear Panel Output Option is installed, the RF output is available at a rear panel Type N connector).

1-11. Internal frequency reference is a 10 MHz free air timebase (the 607XA-130 Oven Reference Option is available for increased accuracy and stability). This 10 MHz reference can also be phase locked to external references of 1, 2, 2.5, 5, or 10 MHz (0.3 to 4V peak-to-peak sine or square wave) input via a rear panel BNC connector (50 Ohm input impedance, nominally). When an external reference is used, the shift from internal to external is automatic. The 10 MHz reference signal (used as the internal instrument reference) is available as a TTL signal at a rear panel REF OUT connector.

1-12. Below 520 MHz, output level can be selected with a resolution of 0.1 dB over the range of +19 to −140 dBm (2 V to 22 nV rms) into 50 Ohms. At 520 MHz or above, output level can be selected with a resolution of 0.1 dB over the range of +13 to −140 dBm (1 V to 22 nV rms). Selected level is displayed on the front panel in either dBm or volts (the instrument will convert from one to the other if the units are changed). The internal microprocessor automatically compensates output level for flatness and accuracy although this automatic correction can be disabled (special function 81).

1-13. The RF output signal can be modulated in various combinations of amplitude modulation (AM), frequency modulation (FM), or phase modulation (ØM) from internal sources, external sources, or a combination of internal and external sources. Table 1-1 lists all modulation combinations and the possible modulation sources for each combination. Amplitude modulation depth can be selected with a resolution of 0.1% over the range of 0% to 99.9% (see the specifications for calibrated range). The frequency modulation function allows the output frequency to be deviated while the output frequency is still synthesized unless the DCFM Mode is selected. Maximum index of modulation that can be selected for either FM or ØM depends upon the output frequency and the modulation frequency selected. The internal modulation signal can be made available at the MOD OUT connectors (front and rear panels). An external modulation signal can be either ac or dc coupled through parallel connectors on the rear and front panels (MOD IN connector, 600 Ohm nominal input impedance). External input sensitivity is such that a 1 V peak input signal produces the calibrated modulation. The list of specifications at the end of this section provides detailed information about the modulation characteristics.

1-14. Up to 9 front panel setups can be stored in the internal memory of the standard instrument, but these setups are lost when the instrument is turned off. The 607XA-570 Non-Volatile Memory Option provides 50 memory locations. Since this option is battery powered, front panel setups stored in these 50 locations are not lost when the instrument is turned off.

1-15. Three outputs are available for coordinating the activity of associated devices: sweep analog output, penlift output, and output invalid output. The sweep analog output is available at the front panel SWP OUT connector. This output steps from 0 to 10V as the frequency is swept from the start frequency to the stop frequency. The size of the steps depends upon the sweep width and the sweep increment selected. The penlift output is

available at a rear panel BNC connector. This output is a TTL signal that goes high during a sweep retrace and stays high until the next sweep starts. The output valid signal is available at a rear panel BNC connector. This output is a TTL signal that goes high when output frequency, output amplitude, or modulation is potentially unsettled.

1-16. The 6070A or 6071A can operate from line voltages either between 90 to 132V ac or between 180 to 264V ac at any frequency from 47 to 63 Hz. Section 3 of this manual presents a procedure for switching between the two ranges of line voltage.

Table 1-1. Sources for Modulation Combinations

COMBINATION	SOURCE	
	INTERNAL	EXTERNAL
AM	AM	
		AM
FM	FM	
		FM
ØM	ØM	
		ØM
AM + FM	AM FM	NONE
	AM	FM
	FM	AM
AM + ØM	AM ØM	NONE
	AM	ØM
	ØM	AM

1-17. OPTIONS AND ACCESSORIES

1-18. The options and accessories available for use with the 6070A and the 6071A are listed in Table 1-2. Additional information is provided in the Options and Accessories section of this manual.

1-19. SPECIFICATIONS

1-20. The specifications for both the 6070A and the 6071A are listed in Table 1-3.

Table 1-2. 6070A/6071A Accessories and Options

MODEL/ OPTION NO.	NAME	COMMENTS
	ACCESSORIES	
Y6001	Rack Mount Kit	Includes: M05-205-600 (5½ inch Rack Mount Ears) and M00-280-610 (24-inch Rack Slides).
Y8001	IEEE Standard Cable, 1 meter	
Y8002	IEEE Standard Cable, 2 meters	
Y8003	IEEE Standard Cable, 4 meters	
Y9100	Attenuator, 6 dB	50 Ohm, 2W, BNC
Y9101	Attenuator, 15 dB	50 Ohm, 2W, BNC
Y9102	Attenuator, 20 dB	50 Ohm, 2W, BNC
Y9103	50 Ohm Feedthru Termination, BNC	
Y9111	Coaxial Cable, 50 Ohm, 3 feet (0.91m), BNC	
Y9112	Coaxial Cable, 50 Ohm, 6 feet (1.83m), BNC	
Y9300	Directional Coupler, 100 kHz to 2 GHz, 50 Ohm Impedance, BNC	1.95 dB Coupling, 0.5 dB Insertion Loss, typically 30 dB directivity to 1 GHz.
Y9301	Min-loss Pad, DC to 1 GHz, 50 Ohm In - 75 Ohm Out, 1 W, BNC	Better than 1.2 to 1 VSWR, not more than 6 dB Insertion loss.
Y9302	Attenuator, 3 dB	DC to 1 GHz, 2W average, 50 Ohm. 1.25 VSWR max., Type N
Y9303	Attenuator, 6 dB	
Y9304	Attenuator, 10 dB	
Y9305	Attenuator, 20 dB	
Y9306	Attenuator, 30 dB	
Y9307	Adapter, Type N Male to BNC Female, 75 Ohm impedance	
Y9308	Adapter, Type N Male to BNC Female, 50 Ohm Impedance	
Y9309	Adapter, Type N Male to Type N Male	
Y9310	Adapter, Type N Male to SMA Female	
Y9311	RF Detector, Broad Crystal Detector, 50 Ohm, BNC	Total Output Flatness: ±0.6 dB 100 kHz to 1.2 GHz, positive output.
Y9312	Double Balanced Mixer, 500 Hz to 10 MHz, BNC	+7 dBm LO, conversion loss 10 dB max., isolation 20 dB min.
Y9313	Double Balanced Mixer, 2 MHz to 1 GHz, BNC	17 dBm LO, conversion loss 10 dB max., isolation 20 dB min.
Y9314	Power Splitter, 2 MHz to 1 GHz, BNC	
Y9315	Coaxial Cable, 50 Ohm, Type N Male	
Y9316	Cap, Non-shorting, BNC	
Y9317	50 Ohm Termination, Shielded, Type N	

Table 1-2. 6070A/6071A Accessories and Options (cont)

MODEL/ OPTION NO.	NAME	COMMENTS
	OPTIONS	
607XA-130	Oven Reference	High stability timebase in an oven.
607XA-570	Non-Volatile Memory	Battery powered memory. Provides 50 storage locations for front panel setups. Retains information for about 4 years.
607XA-830	Rear Panel RF Output	Provides the 6070A RF output to the rear panel via a type N connector.
607XA-831	Auxiliary RF Output	Provides a portion of the RF output at a rear panel BNC connector. This signal is tapped off of the RF output signal before the level detector, so frequency is accurate, but level is not.
607XA-870	Reverse Power Protection	Provides reverse power protection for transceiver test applications (withstands up to 50 watts protection from a 50 Ohm source over the frequency range of 200 kHz to 1040 MHz and will withstand up to 50V dc).

Table 1-3. 6070A/6071A Specifications

Unless otherwise noted, the following performance is guaranteed over the specified environmental an AC line power conditions (see GENERAL at the end of this table), and for normal autoranging operation, 20 minutes after the instrument is turned on.

FREQUENCY

Range

6070A ..... 0.2 to 519.999999 MHz.
6071A ..... 0.2 to 1039.999998 MHz.

Resolution ..... 1 Hz (2 Hz above 520 MHz for the 6071A).

Accuracy and Stability ..... Same as the Reference Oscillator.

Switching Time ..... The time from when the signal at the rear panel OUT VALID connector goes false until the frequency of the RF output signal is within 100 Hz of the final value is less than 70 ms (typically, the IEEE and instrument processing time before the signal at OUT VALID goes false is 10 ms).

Connector ..... Type-N, front panel RF OUTPUT connector. 50 Ohms impedance, nominal.

NOTE: The 607XA-830 Rear RF Output Option makes the RF output signal available at the rear panel instead of at the front panel. Specifications for options are listed near the end of this table.

REFERENCE OSCILLATOR

Internal

TYPE ..... Free-air, 10 MHz crystal oscillator.
AGING RATE ..... < ±0.5 ppm/month
TEMPERATURE STABILITY .... ±5 ppm over the ambient temperature range of 25° C ±25° C (77° F ± 45° F).

NOTE: The 607XA-130 Oven Reference Oscillator Option provides a more stable internal reference. Specifications of options are listed near the end of this table.

External

CONNECTOR ..... BNC rear panel REF IN connector. Input impedance is nominally 50 Ohms, ac coupled.
INPUT SIGNAL ..... The instrument accepts 0.3 to 4.0V peak-to-peak sine or square wave at 1, 2, 2.5, 5, or 10 MHz.
LOCK RANGE ..... ±8 ppm frequency difference. Out-of-lock is indicated by the FREQ and UNCAL annuciators.

Reference Output ..... 10 MHz (TTL) available at the rear panel REF OUT connector (BNC).

AMPLITUDE

Specified Range ..... +19 to -140 below 520 MHz.
+13 to -140 520 MHz and above.

NOTE: AM is restricted above +13 dBm (+7 dBm above 520 MHz) and below -131 dBm.

Unspecified Overrange ..... Up to +20.9 dBm and down to -150 dBm, typically.

Resolution ..... 0.1 dB (at least 1% when displaying voltage).

Table 1-3. 6070A/6071A Specifications (cont)

Switching Time ..... The time from when the signal at the rear panel OUT VALID connector goes false until the amplitude of the RF output signal is within 0.1 dB of the final value is less than 10 ms (typically, the IEEE and instrument processing time before the signal at OUT VALID goes false is 10 ms for voltage and 40 ms for dB programming).

Accuracy and Flatness

RF OUTPUT		ACCURACY (dB)**
FREQUENCY (MHz)	LEVEL (dBm)*	
0.2 to 520 MHz (6070A and 6071A)	+19 to +13	±1.5
	+13 to -131	±[0.8 - 0.01 (output level in dBm)]
	-131 to -140	±4.0
520 to 1040 MHz (6071A only)	+13 to +7	±2.5
	+7 to -131	±[1.6 - 0.015 (output level in dBm)]
	-131 to -140	±4.5

*Subtract 6 dB from the level ranges when AM is on (not specified for <-131 dBm).
**Add ±0.5 dB to the accuracy specification if the 607XA-870 Reverse Power Protection Option is installed.

Source SWR (reference to 50 Ohms) Less than the values listed in the following table.

LEVEL (dBm)	SOURCE SWR	
	0.2 TO 520 MHz	520 TO 1040 MHz
≥+7	2.0	2.5
<+7	1.5	2.0

SPECTRAL PURITY

Spurious ..... Spurs are below the values listed in the following table or -140 dBm, whichever is greater (or -130 dBm at 520 MHz if the 607XA-870 Reverse Power Protection Option is installed).

SPURIOUS SIGNALS	SPECTRAL PURITY (dBc)				
	RF OUTPUT FREQUENCY (MHz)				
	0.2 TO 62.5	62.5 TO 125	125 TO 250	250 TO 520	520 TO 1040
Non-harmonic					
>10 kHz offset*	-90	-100	-96	-90	-84
<10 kHz offset	-70	-82	-76	-70	-64
<0.55 kHz offset	-56	-68	-62	-56	-50
Sub-harmonic (f/2, 3f/2, 5f/2, etc.)	N/A				-35
Harmonic 6070A					
>+13 dBm	-35	-35	-35	-30	N/A
≤+13 dBm	-35	-35	-35	-35	
Harmonic 6071A					
>+13 dBm	-35	-35	-30	-25	N/A
≤+13 dBm	-35	-35	-35	-35	-25

*Spurs are 5 dB worse during HI DEV Mode operation.

Table 1-3. 6070A/6071A Specifications (cont)

Noise Spectral Density ..... The SSB phase noise density is a function of offset and output frequency. The following performance is guaranteed when not in the HI DEV Mode and includes the effect of the internal reference.

FREQUENCY (MHz)	NOISE SPECTRAL DENSITY (dBc/Hz)				
	OFFSET FROM CARRIER				
	0.1 kHz	1 kHz	5 kHz	20 kHz	>3 MHz
0.2 to 62.5	-75	-85	-107	-123	-129
62.5 to 125	-94	-100	-125	-140	-144
125 to 250	-88	-94	-121	-138	-144
250 to 520	-82	-88	-115	-132	-144
520 to 1040	-76	-82	-109	-126	-138

Signal-to-Phase Noise Ratio vs. Offset Frequency from Carrier at 80, 320, and 500 MHz. (Typical)

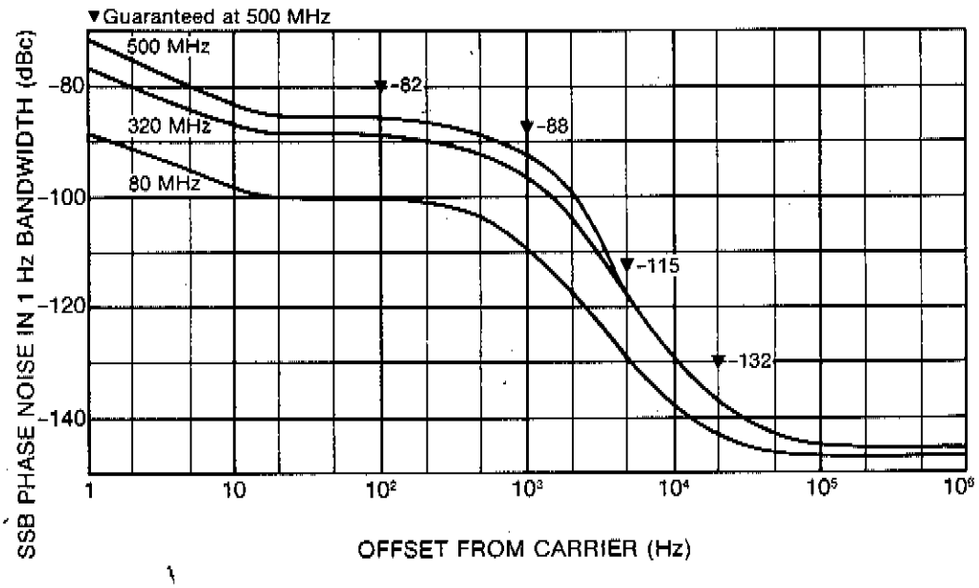

Table 1-3. 6070A/6071A Specifications (cont)

Signal-to-Phase Noise Ratio vs. Carrier Frequency for 20 kHz Offset from Carrier and Broadband Noise Floor (≥3 MHz Offset).

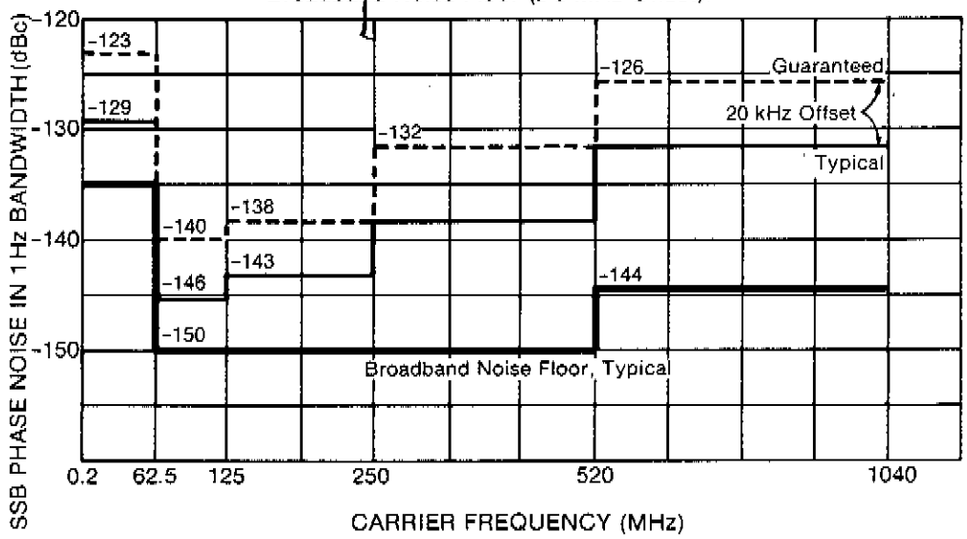

Signal-to-Phase Noise Ratio vs. Offset Frequency from Carrier at 320 MHz in HI DEV Mode (Typical).

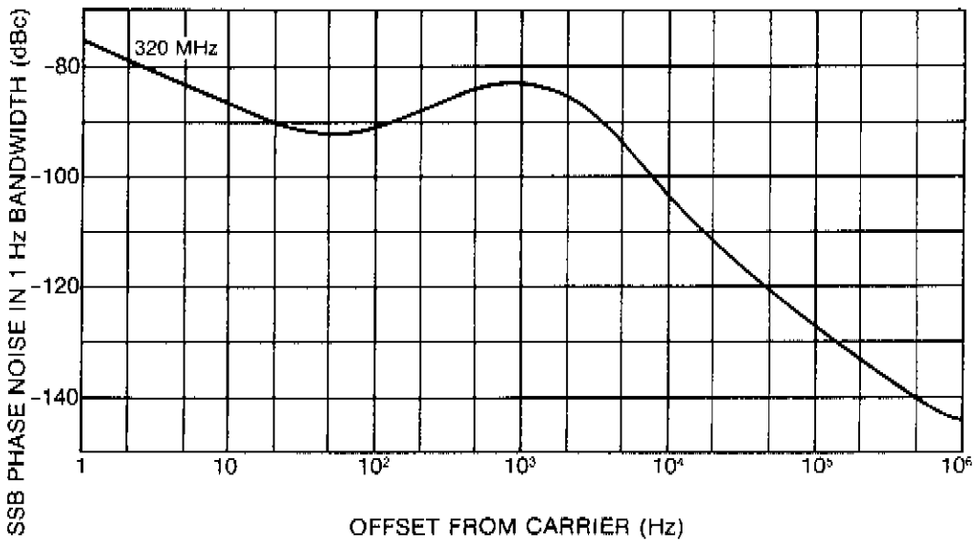

Residual FM (Hz rms) ..... The following table lists the residual FM for CW (and low deviation ACFM and 0M).

FREQUENCY (MHz)	RESIDUAL FM (Hz rms)			
	0.3 TO 3 kHz BW		0.05 TO 15 kHz BW	
	HI DEV OFF	HI DEV ON	HI DEV OFF	HI DEV ON
.2 to 62.5	3.5	20	5	35
62.5 to 125	0.5	5	0.75	9
125 to 250	0.85	10	1.3	18
250 to 520	1.7	20	2.5	35
520 to 1040	3.4	40	5	70

Table 1-3. 6070A/6071A Specifications (cont)

Residual AM ..... <0.02% rms in a 50 Hz to 15 kHz post detection bandwidth on all bands.

AMPLITUDE MODULATION

Depth ..... 0 to 99.9% in 0.1% steps where the total output level (amplitude combined with AM) does not exceed +19 dBm peak at RF output frequencies below 520 MHz or exceed +13 dBm peak for RF output frequencies above 520 MHz.

Accuracy ..... ±5% of full scale above 5 MHz or +5% to -8% of full scale below 5 MHz for rates shown in the Distortion specifications that follow. Amplitude accuracy is not specified below -131 dBm.

Distortion (internal or external)

FREQUENCY (MHz)	RATE	DEPTH FOR SPECIFIED ACCURACY	DISTORTION		
			0 TO 30% AM	30 TO 70% AM	70 TO 90% AM
0.2 to 5	≤1 kHz	<90%	<2%	<5%	<7%
5 to 520	≤3 kHz	<90%	<1.5%	<3%	<3%
520 to 1040	≤3 kHz	<70%	<2%	<3%	<5%

Bandwidth, 3 dB ..... at 90% AM for RF output frequencies between 5 MHz and 520 MHz or at 70% AM for RF output frequencies below 5 MHz and above 520 MHz.

FREQUENCY (MHz)	DC COUPLED	AC COUPLED
0.2 to 5	0 to 8 kHz	20 Hz to 8 kHz
5 to 1040	0 to 50 kHz	20 Hz to 50 kHz

Incidental FM ..... <0.2 fm for 30% AM (<0.6 fm above 520 MHz for 6071A), where fm is modulation frequency, at the rates listed in the Distortion specifications.

FREQUENCY MODULATION

Deviation Ranges

FREQUENCY (MHz)	DEVIATION RANGES (kHz)	
	HI DEV MODE OFF	HI DEV MODE ON
0.2 to 62.5	10, 20, 50, 100, 200	50, 100, 200, 500, 1000
62.5 to 125	2, 5, 10, 20, 50	10, 20, 50, 100, 200
125 to 250	5, 10, 20, 50, 100	20, 50, 100, 200, 500
250 to 520	10, 20, 50, 100, 200	50, 100, 200, 500, 1000
520 to 1040	20, 50, 100, 200, 500*	100, 200, 500, 1000

*HI DEV MODE ON if deviation >400 kHz.

Resolution ..... 100 Hz up to 99.9 kHz Dev
1 kHz above 99.9 kHz Dev

Table 1-3. 6070A/6071A Specifications (cont)

Maximum Deviation

FREQUENCY (MHz)	MAXIMUM DEVIATION (kHz)	
	ACFM THE LESSER OF:	DCFM THE LESSER OF:
0.2 to 62.5*	999 or fm(520 - fo)	499 kHz
62.5 to 125	199 or fmfo	fo or 99.9
125 to 250	499 or fmfo	fo or 199
250 to 520	999 or fmfo	fo or 499
520 to 1040	999 or fmfo	fo or 999

Where: fm = the numeric value of modulation frequency expressed in kHz.
fo = the numeric value of the RF output frequency in MHz.

*At low RF output frequencies, the sum of the modulation frequency and the deviation should not exceed 1000(fo - 0.2) - fm.

Minimum Deviation ..... 10% of range except for 2, 20, and 200 kHz ranges
12.5% of range for 2, 20, and 200 kHz ranges.

Deviation Accuracy (internal or external, AC or DC)
AT 400 AND 1000 Hz
HI DEV Off ..... ±(10% + 0.125% of range)
HI DEV On ..... ±(7% + 0.125% of range)
FROM 0.3 TO 50 kHz (HI DEV on or off, DCFM on or off) ..... ±(12% + 0.125% of range)

Distortion ..... The total harmonic distortion on internal or on external sources up to a 50 kHz rate is a function of output frequency and mode, and is less than the values listed in the following table.

FREQUENCY (MHz)	DISTORTION (% THD)	
	HI DEV OFF	HI DEV ON
0.2 to 62.5	0.5 + 0.75/100 kHz DEV	1.5
62.5 to 125	0.5 + 3/100 kHz DEV	1.5
125 to 250	0.5 + 1.5/100 kHz DEV	1.5
250 to 520	0.5 + 0.75/100 kHzDEV	1.5
520 to 1040	0.5 + 0.375/100 kHz DEV	1.5

NOTE: Distortion for the DCFM Mode is 0.5% plus 1.2% per 100 kHz DEV below 62.5 MHz or (600/fo)% per 100 kHz DEV above 62.5 MHz. The specification applies at the ambient temperature at which DCFM is enabled, where fo is the RF output frequency in MHz.

Bandwidth ..... The frequency where the response is 3 dB below the maximum is at least 250 kHz at the high end and less than 20 Hz at the low end when AC coupled.

Incidental AM ..... <0.5% AM for up to 50 kHz deviation at a 1 kHz rate.

Table 1-3. 6070A/6071A Specifications (cont)

Center Frequency Accuracy ..... Same as the reference oscillator for ACFM. The center frequency accuracy values are listed in the following table for the DCFM Mode (after enabling DCFM).

FREQUENCY (MHz)	MAXIMUM INITIAL OFFSET (Hz)	TYPICAL FREQUENCY STABILITY (Hz/MINUTE)
0.2 to 62.5	±1000	50
62.5 to 125	±250	12.5
125 to 250	±500	25
250 to 520	±1000	50
520 to 1040	±2000	100

PHASE MODULATION

Index Ranges

FREQUENCY (MHz)	INDEX RANGES (RADIANS)	
	HI DEV OFF	HI DEV ON
0.2 to 62.5	1, 2, 5, 10, 20	5, 10, 20, 50, 100
62.5 to 125	0.2, 0.5, 1, 2, 5	1, 2, 5, 10, 20
125 to 250	0.5, 1, 2, 5, 10	2, 5, 10, 20, 50
250 to 520	1, 2, 5, 10, 20	5, 10, 20, 50, 100
520 to 1040	2, 5, 10, 20, 50*	10, 20, 50, 100

*HI DEV Mode if index > 40 Radians.

Resolution ..... 0.01 radian up to 9.99 radian.
0.1 radian above 99.9 radian.

Maximum Index ..... Same as the highest available range.

Minimum Index ..... 10% of range except for 0.2, 2, and 20 radian ranges
12.5% of range for 0.2, 2, and 20 radian ranges.

Index Accuracy (internal or external)
AT 400 AND 1000 Hz
HI DEV Off ..... ±(10% + 0.125% of range)
HI DEV On ..... ±(7% + 0.125% of range)
FROM 0.3 TO 3 kHz (HI DEV ON OR OFF) ..... ±(12% + 0.125% of range)

Distortion ..... The total harmonic distortion is less than the values in the following table.

FREQUENCY (MHz)	HI DEV OFF	HI DEV ON
0.2 to 62.5	0.5% + (0.75 x 10^{-5}fm)% per Rad	1.5%
62.5 to 125	0.5% + (3.0 x 10^{-5}fm)% per Rad	1.5%
125 to 250	0.5% + (1.5 x 10^{-5}fm)% per Rad	1.5%
250 to 520	0.5% + (0.75 x 10^{-5}fm)% per Rad	1.5%
520 to 1040	0.5% + (0.37 x 10^{-5}fm)% per Rad	1.5%

Where fm is the numerical value of the modulation frequency in Hz.

Table 1-3. 6070A/6071A Specifications (cont)

Bandwidth	The frequency where the response is 3 dB below the maximum is at least 12 kHz at the high end and less than 20 Hz (ac coupled) or dc (dc coupled) at the low end.
Incidental AM	<0.5% AM for deviations up to 50 radians at 1 kHz rate
EXTERNAL MODULATION INPUT	
Connector	Front and rear panel MOD IN connectors (BNC), connected in parallel, with a nominal 600 Ohm input impedance.
External Input Sensitivity	1V peak provides the programmed modulation depth.
INTERNAL MODULATION OSCILLATOR	
Frequency Ranges	20 Hz to 199 Hz 200 Hz to 1,990 kHz 2 kHz to 19.9 kHz 20 kHz to 199 kHz
Unspecified Overrange	Down to 1 Hz and up to 255 kHz.
Frequency Accuracy	±3% over the range 20 to 30°C (68 to 86°F). ±(3% + 0.1%/°C)below 20 and above 30°C.
Distortion	<0.15% THD from 0.2 to 100 kHz <0.2% THD below 0.2 kHz and above 100 kHz.
Output	Front panel MOD OUT connector (BNC) and associated level control provide nominally 0 to 1 volt peak into 600 Ohms. Level is not programmable. Output impedance is 600 Ohms, nominal.
OTHER OUTPUTS	
Sweep Analog Output	Front panel SWP OUT connector (BNC) provides 0 to 10V up to a 1000 point stepped ramp. Accuracy of the output is ±5% of output ±0.1V.
Penlift	Rear panel PEN LIFT connector (BNC) provides a TTL signal which is high during sweep retrace and until the next sweep starts.
Output Valid	Rear panel OUT VALID connector (BNC) provides a TTL signal which is low when the RF output is potentially unsettled. This signal is also available on the IEEE interface.

Table 1-3. 6070A/6071A Specifications (cont)

MEMORY	
Memory Functions	Store, recall, insert above, delete, define top.
Number of Locations	9 standard, volatile (contents are lost when power is removed); 50 with the 607XAA-570 Non-Volatile Memory Option (contents are retained for about 4 years after power is removed). Front panel setups can be stored in each location and later recalled.
FREQUENCY SWEEP	
Sweep Modes	Auto, (repetitive), single, manual.
Sweep Functions	Symmetrical sweep, asummetrical sweep, sweep speed.
Data Entry Parameters	Sweep width and sweep increment.
Sweep Speed	When slow sweep speed is not selected, the instrument will sweep frequency as fast as possible without regard to whether or not the frequency is settled. When slow sweep speed is selected, the settled period of each increment can be set to 20 ms, 50 ms, 100 ms, 200 ms, and 500 ms.
Sweep Output	0 to +10V, up to 1000-point stepped ramp. Available at the front panel SWP OUT connector.
Penlift/Z Axis Blanking Output	TTL level at the rear panel PEN LIFT connector. High during sweep retrace and until the next sweep starts.
REMOTE CONTROL	
Interface	IEEE Standard 488, 1978.
Functions Controlled	All front panel controls except the POWER and MOD OUT controls.
Status Indicators	REM (remote), ADDR (addressed), SRQ.
Interface Functions	SH1, AH1, T6, TE0, L3, LE0, SR1, RL1, PP0, DC1, DT1, C0.
GENERAL	
Temperature	
OPERATING	0 to 50°C (32 to 122°F)
NON-OPERATING	-40 to 75°C (-40 to 167°F)
Operating Humidity	0 to 95% up to 25°C (77°F) 0 to 75% up to 50°C (122°F)

Table 1-3. 6070A/6071A Specifications (cont)

Conducted and Radiated Interference	<3 uV induced in a 2 turn, 1-inch loop that is 1 inch from any surface and measured into a 50 Ohms receiver. Complies with RE02 and CE03 of MIL-STD-461A, sections 4.3.1 and 4.3.2 of MIL-I-6181D, both narrow and broad band.		
Size	width	height	depth
	43 cm	13.3 cm	54.6 cm
	17 inches	5.25 inches	21.5 inches
Weight	28 kg (61 lbs.)		
Power	100, 120, 200, and 240V ac ±10%, 47 to 63 Hz.		
Protection Class	Class 1 (as defined in IEC 348)		

OPTIONS

607XA-130 Oven Reference Option

FREQUENCY	10 MHz
AGING RATE	$<\pm 5 \times 10^{-10}$/day, after a 21 day warmup.
TEMPERATURE STABILITY	$<\pm 2 \times 10^{-10}$/°C.
POWER	On during standby operation (STBY indicator on).

607XA-570 Non-Volatile Memory Option

NUMBER OF LOCATIONS	50
STORAGE TIME	With power removed, the contents will be retained for about 4 years.
POWER SOURCE	Instrument power supply, operating or in standby. Battery when power is removed.
POWER-ON CONDITION	Instruments with this option return the front panel to the setup that existed when the instrument was placed in standby or was turned off.

607XA-830 Rear RF Output Option
(replaces the front panel RF OUTPUT connector)

SPECIFICATIONS	Same as standard instrument.
CONNECTOR	Type N, rear panel RF OUT connector.

607XA-831 Auxiliary RF Output Option

FREQUENCY	Same as RF output frequency.
AMPLITUDE	>-18 dBm for normal autoranging operation.
IMPEDANCE	50 Ohms, nominal.
CONNECTOR	BNC, rear panel AUX OUT connector.

Table 1-3. 6070A/6071A Specifications (cont)

607XA-870 Reverse Power Protection Option

PROTECTION LEVEL	Up to 50 watts from a 50 Ohm source over the frequency range of 0.2 to 1040 MHz. Will withstand up to 50V dc (dc blocking capacitor at the output).
LEVEL ACCURACY	Add ±0.5 dB to Amplitude Accuracy (listed earlier in this table).
HARMONICS	Degrade harmonics specifications (listed earlier in this table) by 5 dB for levels above +13 dBm.

Section 2
Shipping and Service Information

2-1. SHIPPING INFORMATION

2-2. The instrument is packaged and shipped in a foam-packed container. When you receive the instrument, inspect it thoroughly for possible shipping damage. Special instructions for inspection and claims are included in the shipping container.

2-3. If reshipment is necessary, use the original container. If the original container is not available, order a new container from the John Fluke Mfg. Co., Inc.; P.O. Box 43210; Mountlake Terrace; Wa 98043; telephone (206) 774-2211. When ordering a new shipping container, state the instrument model number.

2-4. SERVICE INFORMATION

2-5. Warranty

2-6. Each John Fluke Model 6070A or 6071A Synthesized RF Signal Generator is warranted for a period of 1 year upon delivery to the original purchaser. The WARRANTY is located at the front of this manual.

2-7. Service

2-8. Factory authorized service (including calibration) for either the 6070A or the 6071A is available at selected John Fluke Technical Service Centers. For service and/or calibration, return your instrument to the nearest John Fluke Technical Service Center. The local technical service center will handle transportation to and from the selected technical service centers as required. Tables A-1 and A-2 in Appendix A provide a complete list of John Fluke Technical Service Centers. Appendix A is located at the rear of this manaul. If requested, you will be provided with an estimate before work is begun on instruments that are beyond the warranty period.

2-9. ADDITIONAL INFORMATION

2-10. For any additional information, contact your nearest John Fluke Sales Representative or the John Fluke Mfg. Co., Inc.; P.O. Box 43210; Mountlake Terrace; WA 98043; telephone (206) 774-2211. Tables A-3 and A-4 in Appendix A provide a complete list of John Fluke Sales Representatives. Appendix A is located at the end of this manual.

Section 3
Installation and Maintenance

3-1. INTRODUCTION

3-2. This section contains the information necessary to install the open termination units, to physically mount the instrument, to connect line power to the instrument, to connect the instrument electrically to the IEEE-488 interface, and to perform operator maintenance.

3-3. MOUNTING: RACK OR BENCH

CAUTION

The instrument should have at least 3 inches of clearance behind the ventilation fan for adequate cooling.

3-4. The 6070A and 6071A are designed to be either placed directly on the work bench or to be mounted in standard 24-inch deep equipment racks using the Y6001 rack mounting accessory. The Y6001 is composed of the two Fluke acessories listed in Table 3-1. Figure 3-1 shows these accessories.

3-5. INPUT LINE POWER

WARNING

TO AVOID SHOCK HAZARD OR INSTRUMENT DAMAGE, CONNECT THE INSTRUMENT LINE POWER GROUND TO EARTH GROUND. DO NOT BREAK THIS GROUND CONNECTION BY USING A TWO CONDUCTOR EXTENSION CORD.

3-6. The instrument can operate from various line power configurations. Line power voltage can be from 90 to 132V ac rms or from 180 to 264V ac rms. Line frequency can be 47 to 63 Hz (Call or write the John Fluke Mfg. Co., Inc.; P.O. Box 43210; Mountlake Terrace; WA 98043; telephone number (206) 774-2211. DO NOT ATTEMPT TO OPERATE THE INSTRUMENT WITH A 400 HZ INPUT WITHOUT FIRST CALLING OR WRITING FOR INFORMATION ON 400 HZ OPERATION). Your instrument is factory set to operate with a line voltage of 90 to 132V ac rms. Use the Operator Maintenance procedures described later in this section to determine the line voltage selected for your instrument or to change the line voltage selected for your instrument. Use the following procedure when connecting your instrument to line power

1. On the instrument, set the POWER control (front panel)to the STBY position and set the MAIN POWER switch (rear panel) to the OFF position.

2. Connect the instrument to an appropriate line power source.

Table 3-1. Rack Mounting Accessories, Y6001

MODEL	NAME
M05-205-600	5½-inch Rack Mount
M00-280-610	24-inch Rack Slides

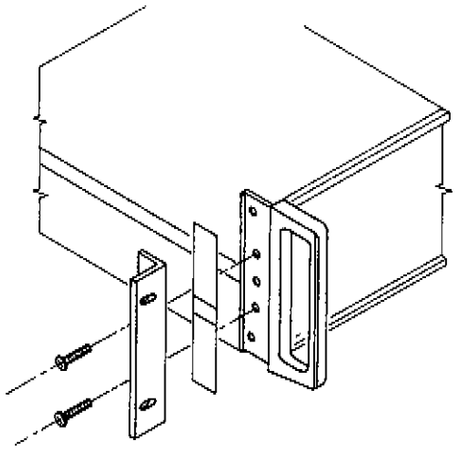

5½-INCH RACK MOUNT M05-205-600

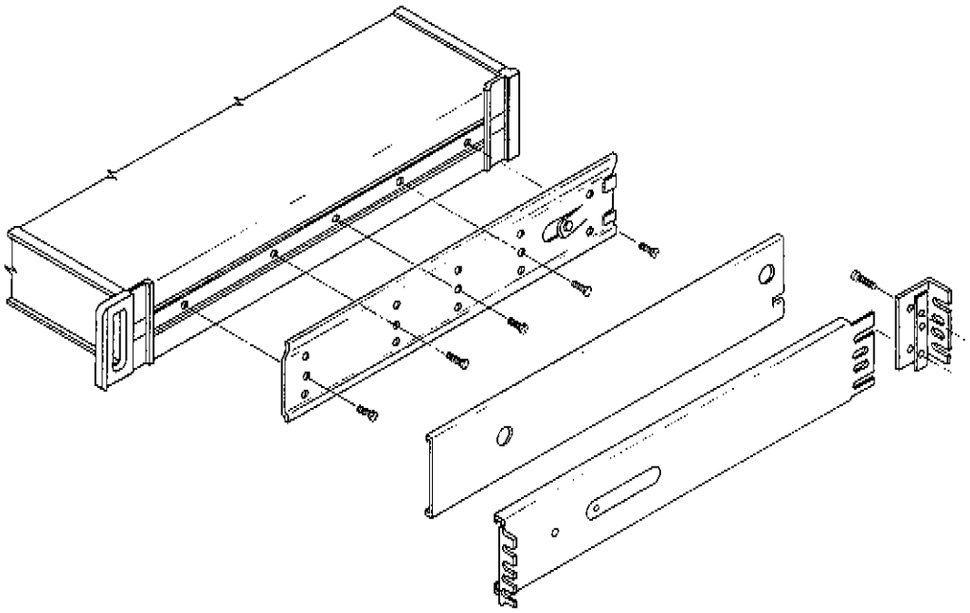

24-INCH RACK SLIDES MOO-280-610

Figure 3-1. Rack Mounting Accessories, Y6001

WARNING

IF THE FRONT PANEL STBY POWER INDICATOR DOES NOT TURN ON WITHIN ONE MINUTE AFTER THE MAIN POWER SWITCH IS SET TO THE ON POSITION, SET THE MAIN POWER SWITCH TO THE OFF POSITION TO PREVENT ADDITIONAL INSTRUMENT DAMAGE. TROUBLESHOOTING AND REPAIR IS INDICATED.

3. Set the Rear Panel Power switch to the ON position. If the front panel STBY POWER lindicator does not turn on within 1 minute,set the Rear Panel Power switch to the OFF position. Troubleshooting and repair is indicated.

4. When the STBY POWER indicator turns on, the instrument is in the standby condition. The 607XA-130 Oven Reference Option and the 607XA-570 Non-Volatile Memory Options, if installed, receive power in standby. No other instrument circuit receives power during standby.

3-7. RF EMISSION CONTROL

3-8. For applications which are sensitive to RF emissions, it is recommended that BNC open termination units be installed on all unused rear panel connectors.

3-9. IEEE-488

3-10. Electrical Connection

3-11. The IEEE-488 Connector (rear panel) mates with any standard 24-conductor IEEE-488 cable. Figure 3-2 shows the pin-outs on the connector. IEEE-488 system connections must not exceed the following limits:

1. No more than 15 devices may be connected in a single IEEE-488 Bus system.

2. The total length of cable used in one IEEE-488 Bus system must not exceed 20 meters.

3. The total length of cable must also not exceed 2 meters times the number of devices in the system.

3-12. Table 3-2 lists IEEE Standard Cables available from Fluke in lengths of 1, 2, and 4 meters. Combinations of these cables can be used to meet the IEEE-488 Bus system cable restrictions. For example, when only the signal generator is connected to a controller, the number of devices is 2. According to limit 3, the total length of cable must not exceed two meters times the number of devices. So, the total length of cable must be 4 meters or less. Therefore, any one of the accessory cables can be used to connect the two instruments.

3-13. IEEE-488 INTERFACE Switches

3-14. The positions of the IEEE-488 INTERFACE switches (rear panel) determine the IEEE-488 address of the instrument and determine whether the instrument is both a talker and a listener or just a listener. Set the LISTEN ONLY switch to the ON (up) position to make the instrument just a listener. Set the LISTEN ONLY switch to the OFF (down) position to make the instrument both a talker and a listener. The positions of the five switches a1 through a5 determine the IEEE-488 address of the instrument. The IEEE-488 address is the same for both the listener and the talker functions. Set the switches to the positions indicated in Table 3-3 for the desired address. If LISTEN ONLY is at the ON position, the instrument is always addressed, so the positions of a1 through a5 will have no meaning.

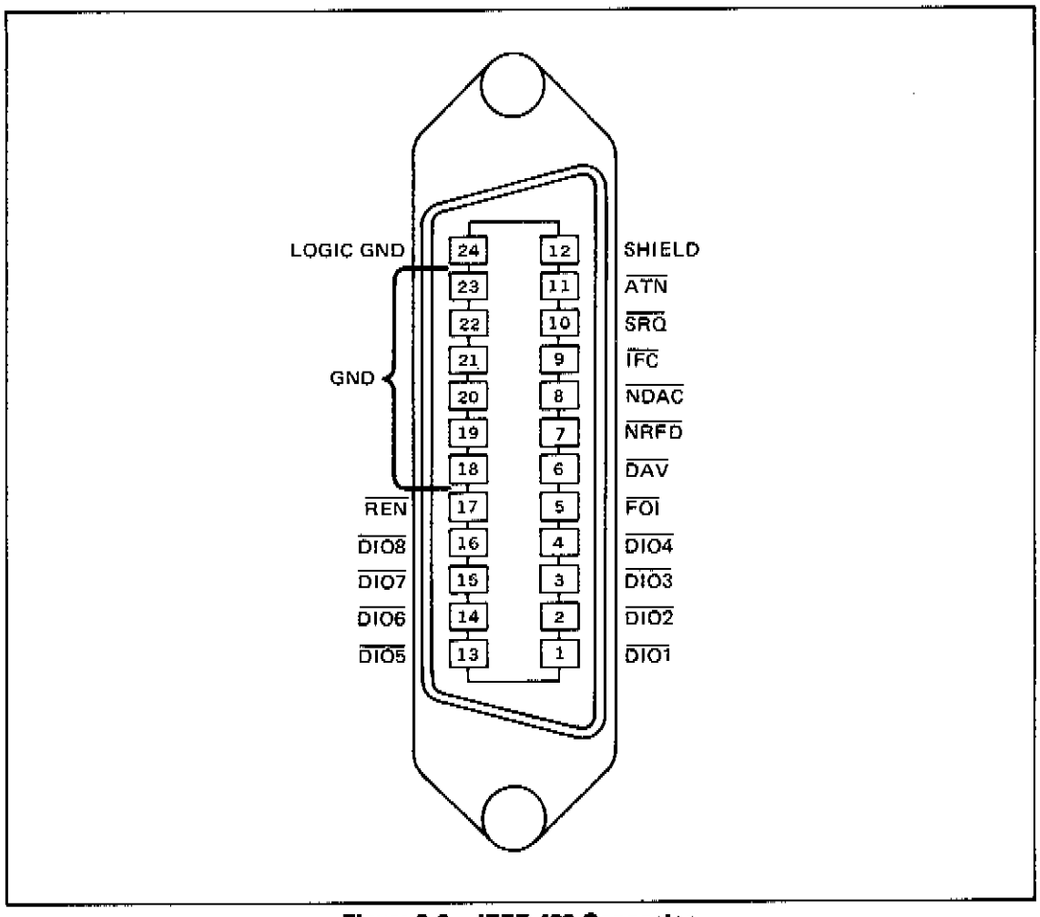

Figure 3-2. IEEE-488 Connector

Table 3-2. IEEE-488 Cable Accessories

MODEL NUMBER	NAME
Y8001	IEEE Standard Cable, 1 meter
Y8002	IEEE Standard Cable, 2 meters
Y8003	IEEE Standard Cable, 4 meters

3-15. OPERATOR MAINTENANCE

3-16. Fuse Replacement

3-17. The instrument has two fuses: the main power fuse and the auxiliary power supply fuse. The main power fuse can be replaced from the rear panel of the instrument, but the instrument must be partially disassembled to replace the auxiliary power supply fuse. The following procedure describes how to replace the main power fuse. Replacement of the auxiliary power supply fuse is described in the 6070A/6071A Calibration Manual.

1. Set the POWER control to the STBY position, set the MAIN POWER switch to the OFF position, and disconnect line power.

Table 3-3. IEEE-488 Address

IEEE-488 BUS ADDRESS	IEEE-488 INTERFACE SWITCH POSITIONS				
	a5	a4	a3	a2	a1
00	DN	DN	DN	DN	DN
01	DN	DN	DN	DN	UP
02	DN	DN	DN	UP	DN
03	DN	DN	DN	UP	UP
04	DN	DN	UP	DN	DN
05	DN	DN	UP	DN	UP
06	DN	DN	UP	UP	DN
07	DN	DN	UP	UP	UP
08	DN	UP	DN	DN	DN
09	DN	UP	DN	DN	UP
10	DN	UP	DN	UP	DN
11	DN	UP	DN	UP	UP
12	DN	UP	UP	DN	DN
13	DN	UP	UP	DN	UP
14	DN	UP	UP	UP	DN
15	DN	UP	UP	UP	UP
16	UP	DN	DN	DN	DN
17	UP	DN	DN	DN	UP
18	UP	DN	DN	UP	DN
19	UP	DN	DN	UP	UP
20	UP	DN	UP	DN	DN
21	UP	DN	UP	DN	UP
22	UP	DN	UP	UP	DN
23	UP	DN	UP	UP	UP
24	UP	UP	DN	DN	DN
25	UP	UP	DN	DN	UP
26	UP	UP	DN	UP	DN
27	UP	UP	DN	UP	UP
28	UP	UP	UP	DN	DN
29	UP	UP	UP	DN	UP
30	UP	UP	UP	UP	DN
31	UP	UP	UP	UP	UP

2. On the rear panel, remove the six allen screws that hold the RFI shield over the main power fuse and the line voltage selection switch (Figure 3-3).

3. Replace the main power fuse with a 3A, 250V, FAST BLO fuse. Do not substitute another fuse type.

4. Replace the RFI shield.

5. Connect line power to the instrument and set the MAIN POWER switch and the POWER control to the ON positions.

3-18. Changing Line Power Configuration

3-19. Figure 3-3 shows the line voltage selection switch. This control determines whether the instrument will operate in a 90 to 132V ac rms line voltage environment or a

180 to 264V ac rms line voltage environment. Use the Fuse Replacement procedure to gain access to the switch, then set the switch to the position for the line voltage desired. The white window on the switch will show 115 for the 90 to 132V position and 230 for the 180 to 264V position.

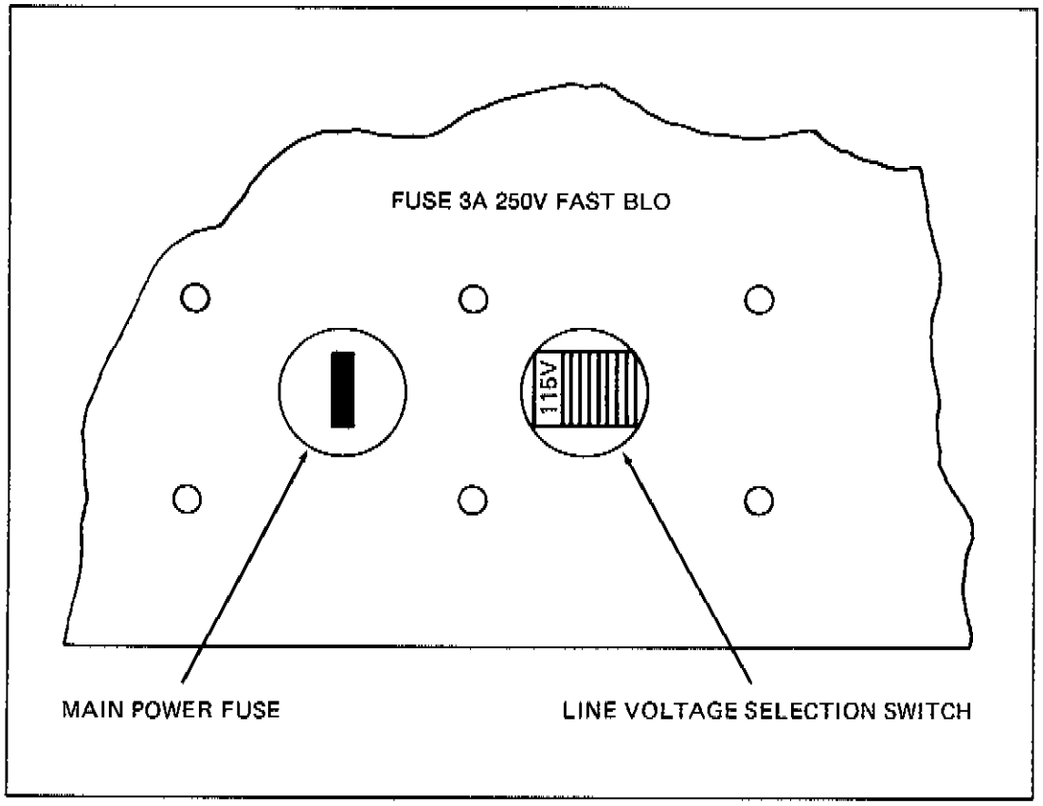

Figure 3-3. Main Power Fuse and Line Voltage Selection Switch

Section 4
Familiarization

4-1. INTRODUCTION

4-2. The information in this section of the manual acquaints the operator with the instrument by describing the location and basic function of each external feature of the instrument and then detailing a brief exercise which uses these features. The location and basic function of the front panel features are described in 6070A/6071A Front Panel Controls, Connectors, and Indicators. The location and basic function of the rear panel features are described in 6070A/6071A Rear Panel Controls and Connectors. The Familiarity Exercise lets the beginning operator become familiar with the instrument and provides a gross check of instrument performance. Before attempting to use the instrument, the operator should read and understand the contents of this section and the Local Operation and/or Remote Operation sections of this manual.

4-3. 6070A/6071A FRONT PANEL CONTROLS, CONNECTORS, AND INDICATORS

4-4. The foldout at the back of this manual shows the location of all front panel features on a 6070A, (The locations and names of 6071A front panel features are the same.) All front panel controls (except the POWER control and the MOD OUT knob) are monitored by an internal microprocessor which controls the instrument circuitry. Figures 4-1 through 4-4 show the location and describe the basic function of each front panel feature of the 6070A and the 6071A.

4-5. 6070A/6071A REAR PANEL CONTROLS AND CONNECTORS

4-6. Figure 4-5 shows the location and describes the function of each rear panel control and connector.

4-7. FAMILIARITY EXERCISE

4-8. Introduction

4-9. The Familiarity Exercise is intended to acquaint the beginning operator with the instrument while providing a gross check of instrument performance. Refer to the appropriate material in Sections 5 through 5E for more detailed information or for information about operations not covered in this exercise. The Familiarity Exercise is not a performance check; the instrument can be out of calibration and sucessfully complete the exercise. Before beginning the exercise, connect the instrument to the appropriate line power, set the MAIN POWER switch (rear panel) to the ON position, and set the POWER control (front panel) to the STBY position.

4-10. Power On

4-11. Set the POWER control to the ON position. The instrument sequences through a power-on setup procedure which includes a group of self tests.

- The automatic power-on sequence can be aborted by pressing any one of the FUNCTION controls.

- All illuminated controls, indicators, annunciators, and each segment of every display turn on for 5 seconds.

- At the end of the 5 second period, the front panel will be at the standard power on setup (see Section 5E) unless the instrument failed a self test. If the 607XA-570 Non-Volatile Memory Option is installed, the instrument will return to the last front panel setup before the instrument was placed in standby.

NOTE

If the 6070XA-570 Non-Volatile Memory Option is installed, the instrument will return to the front panel set up that existed before the instrument was placed in standby.

- If the instrument failed a self test, the model number (6070 or 6071) will appear in the FREQUENCY Display, and a coded message indicating the results of the self tests will appear in the AMPLITUDE Display.

  1. The error code in the AMPLITUDE Display can be interpreted using the appropriate material in Section 5E or the pullout card located under the front panel.

  2. Press any FUNCTION control to proceed.

4-12. Front Panel On/Off Control Operations

4-13. Many of the front panel controls act like off/on switches. The ON RF OUTPUT control is one example.

1. Press the ON RF OUTPUT control. The control lights to indicate that the RF output signal is present at the RF OUTPUT connector.

2. Press ON RF OUTPUT again. The control is dark to indicate that the RF output signal is no longer available at the RF OUTPUT connector. (The UNCAL annunciator flashes while the RF output is disabled to indicate that the signal present at the RF OUTPUT connector is not the same as the displayed signal.)

4-14. Keyboard Operations

4-15. Examples of keyboard operation follow:

1. FUNCTION/DATA/UNITS Keyboard Operations use the instrument functions labeled over the FUNCTION controls.

EXAMPLE: Enter an RF output frequency of 222 kHz.

CONTROL SEQUENCE	COMMENTS
FUNCTION FREQ / DATA 2 2 2 / UNITS kHz/mV	FREQUENCY Display is 222 000.

2. SHIFT/FUNCTION/DATA/UNITS Keyboard Operations use the instrument functions labeled under the FUNCTION controls.

EXAMPLE: Enter a sweep width of 20 kHz.

CONTROL SEQUENCE	COMMENTS
FUNCTION: SHIFT, SWP WDTH; DATA: 2 0; UNITS: kHz/mV	The FREQUENCY Display will show the entry until the UNITS control is pressed. Sweep width is now 20 kHz.

3. SHIFT/DATA Keyboard Operations are used to select special instrument functions. These functions are described in Section 5E.

EXAMPLE: Select asymmetrical sweep (Special Function 51); and then select symmetrical sweep (Special Function 50).

CONTROL SEQUENCE	COMMENTS
FUNCTION: SHIFT; DATA: 5 1	The ASYM indicator lights in the SWEEP control group to indicate that asymmetrical sweep is selected.
FUNCTION: SHIFT; DATA: 5 0	The ASYM indicator darkens to indicate that symmetrical sweep is selected.

4. MEMORY/MEMORY LOCATION Keyboard Operations use the instrument functions labeled above the MEMORY controls. These instrument functions STORE the current front panel setup in the memory location, RECALL the contents of the memory location, and define the memory location as the TOP location in the memory stack (see Section 5D for detailed information).

EXAMPLE: Store the current front panel setup in memory location 2.
Modify the FREQUENCY Display and recall memory location 2.

CONTROL SEQUENCE	COMMENTS
MEMORY STORE; 0 2 MEMORY LOCATION	The current front panel setup is stored in memory location 2.
FUNCTION FREQ; DATA: 1 0 0; UNITS: MHz/V	The FREQUENCY Display is now 100 000 000 instead of 222 000.
MEMORY RECALL; 0 2 MEMORY LOCATION	The front panel setup is recalled from memory location 2, so the FREQUENCY Display changes from 100 000 000 to 222 000.

5. SHIFT/MEMORY/MEMORY LOCATION Keyboard Operations program the instrument functions labeled below the MEMORY controls. These functions

either insert the current front panel setup above the addressed memory location or delete the contents of the addressed memory location.

EXAMPLE: Insert the current front panel setup into memory location 4, change the FREQUENCY Display, and then recall memory location 4. The front panel set up in actually inserted above (one numerical count greater) the memory location addressed. So, the memory location number is 3.

CONTROL SEQUENCE	COMMENTS
FUNCTION (SHIFT) MEMORY (INSERT) 0 3 (MEMORY LOCATION)	The current front panel setup is stored in memory location 4.
FUNCTION (FREQ) DATA 5 0 UNITS (MHz/V)	The FREQUENCY Display changes from 222 000 to 50 000 000.
MEMORY (RECALL) 0 4 (MEMORY LOCATION)	The FREQUENCY Display changes from 50 000 000 to 222 000 indicating that the first front panel setup was stored in memory location 4.

6. The CLEAR Keyboard Operation is used to recover from errors. If any mistake is made before the entry is complete, press CLEAR to exit the keyboard operation. If an illegal entry is made and rejected (REJ ENT indicator on), press CLEAR or the same FUNCTION control again to clear the rejected entry condition.

EXAMPLE: Make an illegal amplitude entry of 5 V, then use the CLEAR control to clear the rejected entry condition.

CONTROL SEQUENCE	COMMENTS
FUNCTION (AMPL) DATA 5 UNITS (MHz/V)	The AMPLITUDE Display flashes 5V and the REJ ENT and AMPL indicators turn on to indicate that an Amplitude entry has been rejected.
UNITS (CLEAR)	The REJ ENT and AMPL indicators turn off and the AMPLITUDE Display returns to the previous value.

4-16. EDIT Operations

4-17. The EDIT controls and the Edit Knob are used to manually adjust displayed values. The Bright Digit in the display indicates which display position is controlled by the EDIT controls.

CONTROL SEQUENCE	COMMENTS
EDIT (AMPL)	The Bright Digit appears in the AMPLITUDE Display. The Edit Knob is enabled.

CONTROL SEQUENCE	COMMENTS
EDIT OFF	The Bright Digit is not displayed. The Edit Knob is disabled.
EDIT FREQ	The Bright Digit appears in the FREQUENCY Display. The Edit Knob is enabled.
← DIGIT	The Bright Digit moves one position to the left each time the control is pressed. If the control is held in, the Bright Digit will step repeatedly to the left until it reaches the left side of the display.
DIGIT →	This control is the complement of the other DIGIT control. Use it to move the Bright Digit to the right.
Rotate the Edit Knob Clockwise	The Bright Digit increments 25 counts for each rotation of the Edit Knob. Each of the 25 positions has a magnetic detent so that you can feel the count change.
Rotate the Edit Knob Counter-clockwise	The Bright Digit decrements.

4-18. FREQ STEP Operations

4-19. The FREQ STEP controls are used to increment or decrement the FREQUENCY Display field one step each time the controls are pressed. These are repeating controls (like the DIGIT controls). Frequency continues to step as long as the controls are pressed or until a limit is reached. The size of the frequency step is programmed using the FREQ STEP FUNCTION control. Use the FREQ STEP controls to increment and then to decrement the FREQUENCY Display.

4-20. Relative Frequency and Relative Amplitude Operations

4-21. Relative frequency operation allows a displayed frequency to be referenced to a programmed frequency. The displayed frequency can be stepped, programmed, or manually adjusted about the stored reference frequency. Relative amplitude operations are similar, but are much more flexible. See the relative amplitude operations material in Section 5B.

EXAMPLE: Store a reference frequency of 100 MHz. Program a relative frequency of –40 MHz and look at the actual RF output frequency.

CONTROL SEQUENCE	COMMENTS
FUNCTION FREQ; DATA 1 0 0; UNITS MHz/V	FREQUENCY Display is 100 000 000.

CONTROL SEQUENCE	COMMENTS
REL FREQ	The instrument enters relative frequency operation:
	The REL FREQ control is lit. The FREQUENCY Display is zero to indicate that the actual RF output frequency is the same as the 100 MHz stored reference frequency.
FUNCTION FREQ; DATA +/− 4 0; UNITS MHz/V	The FREQUENCY Display is –40 MHz.
Press and hold FUNCTION FREQ	The FREQUENCY Display is 60 MHz, the actual RF output frequency (100 MHz - 40 MHz). Release the control.
REL FREQ	The instrument exits relative frequency operation:
	The REL FREQ control is dark. The FREQUENCY Display is 60 000 000, the last RF output frequency programmed.

4-22. This ends the Familiarity Exercise. Sections 5 through 5E provide additional information about manual operation (front panel) of the instrument, and Sections 6, 6A, and 6B provide information about remote operation of the instrument via the IEEE-488 interface.

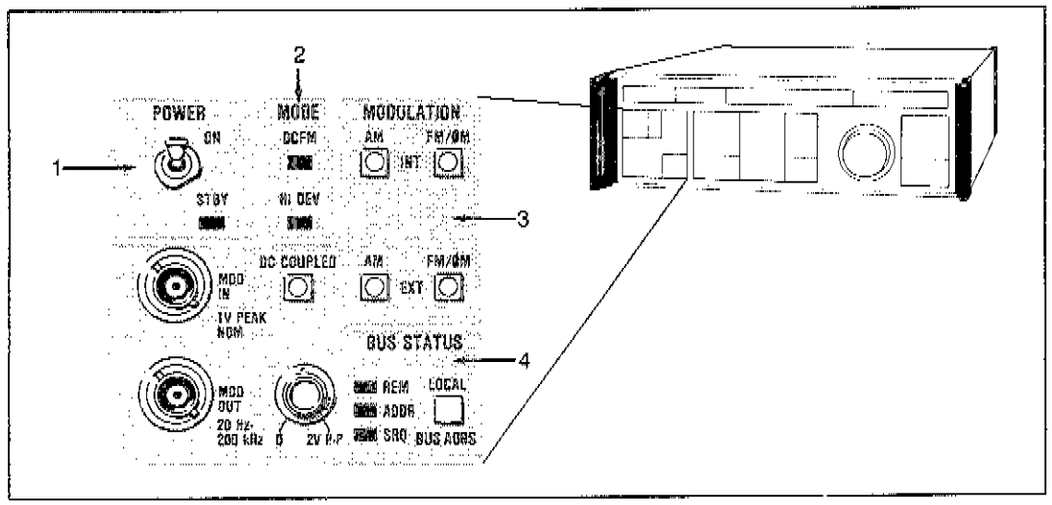

Figure 4-1. POWER, MODULATION, MODE, and BUS STATUS Controls, Connectors, and Indicators

REF. NO.	NAME	FEATURE
1	POWER	
	ON Control	Toggle switch that places the instrument in operate (ON) or standby if the MAIN POWER switch (rear panel) is ON and line power is connected to the instrument.
	STBY	Indicator. On during standby operation.
2	MODE	
	DCFM	Indicator. On during DCFM Mode operation.
	HI DEV	Indicator. On during High Deviation Mode operation.
3	MODULATION	
	AM INT AM EXT FM/ØM INT FM/ØM EXT	Pushbuttons with built-in LEDs to indicate status. Enable [control(s) lit] or disable [control(s) dark] the labeled modulation function(s).
	DC Coupled	Pushbutton with a built-in LED to indicate status. Select ac (control dark) or dc (control lit) coupling for the external signal applied to the MOD IN connector.
	MOD IN	BNC connector. External modulation signal is applied to this connector.
	MOD OUT	BNC connector and potentiometer control. Programmed modulation frequency is available at this connector when the AM INT or the FM/ØM INT control is lit or special function 71 is selected. The potentiometer is used to adjust the amplitude of the signal at the MOD OUT connector over the range of 0 to 2 volts peak-to-peak into 600 ohms.
4	BUS STATUS	
	REM	Indicator. On when the instrument is addressed as a talker or a listener on the IEEE-488 interface.
	ADDR	Indicator. On each time the instrument is addressed as a talker or a listener.
	SRQ	Indicator. On when the instrument generates a service request on the IEEE-488 interface.
	LOCAL BUS ADRS	Dual use pushbutton. Press to select local operation. Press SHIFT and the control to display the IEEE-488 bus address of the instrument in the FREQUENCY display.

Figure 4-1. POWER, MODULATION, MODE, and BUS STATUS Controls, Connectors, and Indicators (cont)

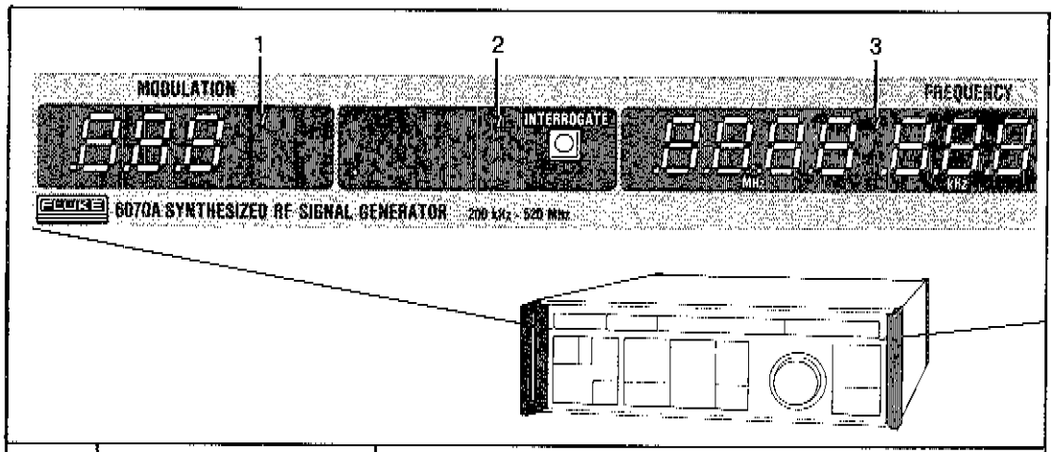

REF. NO.	NAME	FEATURE
1	MODULATION Display	Display consists of three 7-segment digits and four annunciators. The last modulation parameter selected is usually displayed, but modulation related error codes are displayed while the INTERROGATE control is pressed. The annunciator(s) that light for each modulation parameter (selected by a FUNCTION control) are listed below: PARAMETER — ANNUNCIATOR(S) ON AM — % FM — kHz DEV ØM — Rad Modulation Frequency — kHz
2	Status Annunciators MOD FREQ AMPL	Five annunciators and one pushbutton used to indicate instrument status: Annunciators. On steadily or flashing in conjunction with the UNCAL annunciator to indicate the area of the UNCAL anomaly.
	UNCAL	Annunciator. Indicates that some instrument parameter is set outside its specified range. Turns on steadily to indicate that the output can still be used. Flashes to indicate that the output is not useable.
	REJ ENT	Annunciator. Flashes (in some cases, along with the appropriate display) to indicate that the last entry was rejected.
	INTERROGATE	Pushbutton. Press and hold to display UNCAL or REJ ENT error codes.
3	FREQUENCY Display	Display composed of nine 7-segment digits with sign indication and a decimal point preceding each digit position. The digits are separated and labeled as three groups: MHz, kHz, and Hz. 1. The actual frequency of the RF output signal is displayed if the REL FREQ control is dark.

Figure 4-2. Displays

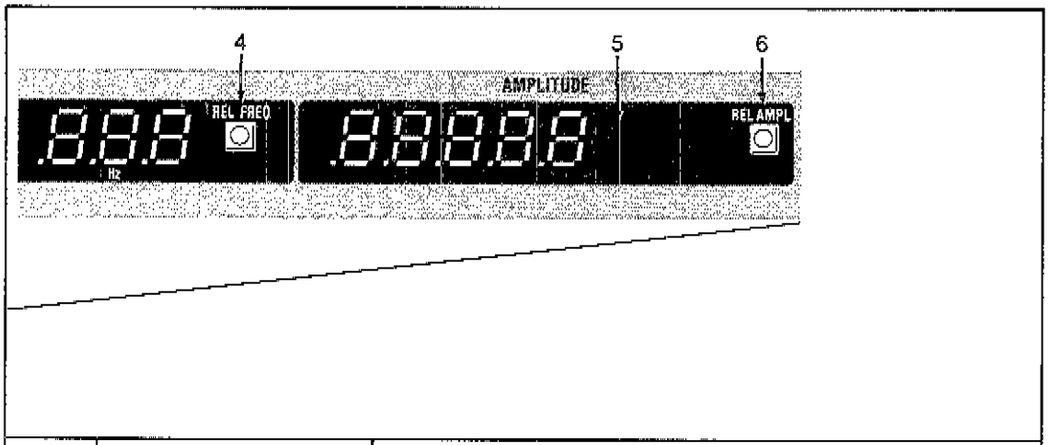

REF. NO.	NAME	FEATURE
		2. The relative frequency is displayed if the REL FREQ control is lit. 3. The actual frequency of the RF output signal is displayed while the FREQ FUNCTION control is pressed, regardless of the status of the REL FREQ control. 4. UNCAL and REJ ENT error codes associated with frequency anomalies are displayed while the INTERROGATE control is pressed.
4	REL FREQ	Pushbutton with a built in LED to indicate status. Enables (control lit) or disables (control dark) relative frequency operation.
5	AMPLITUDE Display	Display composed of four and one-half 7-segment digits and five units annunciators. The display has sign indication and a decimal point position before each whole digit position. 1. The actual level of the RF output signal is displayed if the REL AMPL control is dark. 2. The relative amplitude is displayed if the REL AMPL control is lit. 3. The actual level of the RF output signal is displayed while the AMPL FUNCTION control is pressed, regardless of the status of the REL AMPL control. 4. UNCAL and REJENT error codes associated with amplitude anomalies are displayed while the INTERROGATE control is pressed.
6	REL AMPL	Pushbutton with a built-in LED to indicate status. Enables (control lit) or disables (control dark) relative amplitude operation.

Figure 4-2. Displays (cont)

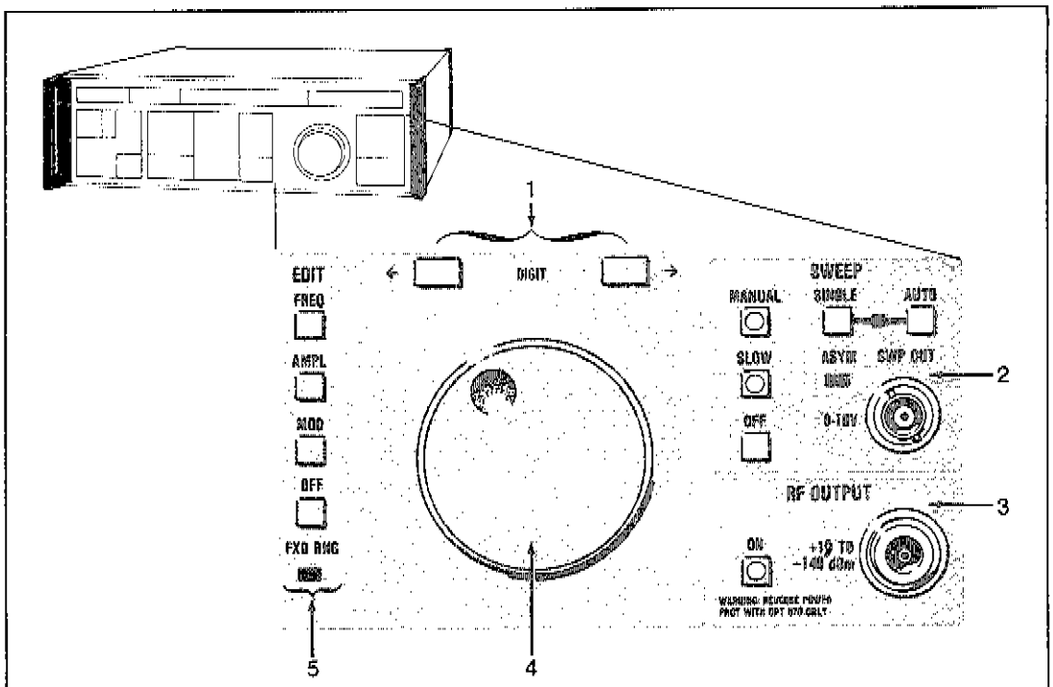

REF. NO.	NAME	FEATURE
1	DIGIT	Two repeating pushbuttons that move the Bright Digit in the display. Press and release for a single action. Press and hold for repeating action.
	→	Moves the Bright Digit to the right.
	←	Moves the Bright Digit to the left.
2	SWEEP	
	AUTO	Pushbutton. Enables repetitive sweep operation.
	SINGLE	Pushbutton. Enables a single sweep.
	Indicator	Indicator between AUTO and SINGLE controls turns on when either button is pushed. Turns off when the single sweep is completed or when automatic sweep is disabled.
	MANUAL	Pushbutton with a built-in LED to indicate status. Enables (control lit) manual sweep operation using the Edit Knob.
	SLOW	Pushbutton with a built-in LED to indicate status. Selects fastest sweep (control dark) or the slower sweep speed (control lit) defined by special functions 40 through 44.
	ASYM	Indicator. Off when symmetrical sweep special function 50 is selected. On when asymmetrical sweep special function 51 is selected.
	OFF	Pushbutton. Disables sweep.

Figure 4-3. EDIT, SWEEP, and RF OUTPUT Controls, Connectors, and Indicators

REF. NO.	NAME	FEATURE
3	RF OUTPUT Connector	Type N connector. When RF OUTPUT ON is lit, the RF output of the instrument is available at this connector.
	ON	Pushbutton with a built-in LED. Enables (control lit) or disables (control dark) the instrument RF output at the RF OUTPUT connector (AMPL UNCAL annunciator will flash when this control is dark).
4	Edit Knob	Rotary knob connected to a rotary digital encoder. Clockwise motion increases the numerical count of the Bright Digit. Counterclockwise motion decreases the numerical count of the Bright Digit.
5	EDIT FREQ	Pushbutton. Enables the Edit Knob with the Bright Digit in the FREQUENCY display.
	AMPL	Pushbutton. Enables the Edit Knob with the Bright Digit in the AMPLITUDE display.
	MOD	Pushbutton. Enables the Edit Knob with the Bright Digit in the MODULATION display (the last modulation parameter selected appears in the MODULATION display).
	OFF	Pushbutton. Disables the Edit Knob (Bright Digit disappears from the displays).
	FXD RNG	Indicator. On when fixed range operation special function 31 is selected.

Figure 4-3 EDIT, SWEEP, and RF OUTPUT Controls, Connectors, and Indicators (cont)

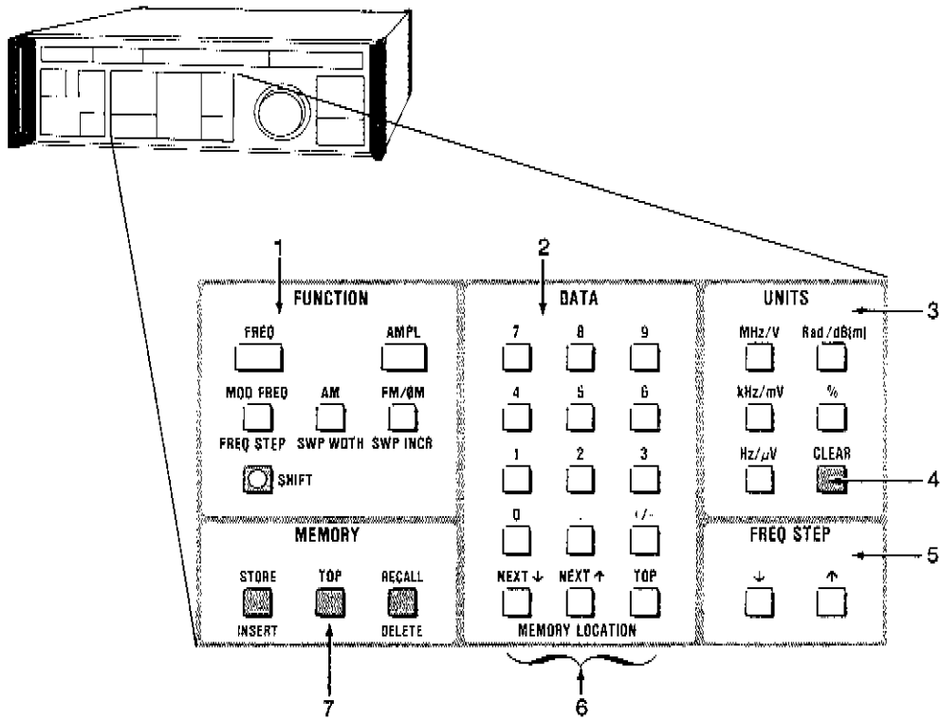

REF. NO.	NAME	FEATURE
1	FUNCTION	Six pushbuttons used in conjunction with the DATA and the UNITS controls for entering the labeled functions.
	FREQ	Press to program frequency. Press and hold to display the actual RF output frequency.
	AMPL	Press to program amplitude. Press and hold to display the actual level of the RF output signal.
	SHIFT	Pushbutton with a built-in LED to indicate status. Used with functions labeled under controls or to select special functions.
	MOD FREQ FREQ STEP	Press to program the modulation frequency. Press SHIFT and then this control to program the size of the frequency step.
	AM SWP WIDTH	Press to program the percentage of AM depth. Press SHIFT and then this control to program sweep width.
	FM/ØM SWP INCR	Press to program angle deviation (the UNITS control used determines whether FM or ØM is programmed). Press SHIFT and then this control to program sweep increment.

Figure 4-4. Keyboard

REF. NO.	NAME	FEATURE
2	DATA	Twelve pushbuttons that make up a standard data entry keyboard with decimal point and sign indications. These pushbuttons are used in conjunction with the FUNCTION and UNITS controls for programming the labeled FUNCTIONs.
3	UNITS	Five pushbuttons used to define the units of FUNCTION entries. The FUNCTION control used will determine which of the labeled units is used.
	MHz/V kHz/mV Hz/uV	Selects MHz, kHz, or Hz units for frequency related entries or V, mV, or uV units for amplitude related entries.
	Rad/dB(m)	Selects radians for ϕM entries or dB(m) for amplitude related entries.
	%	Selects percentage units for AM entries.
4	CLEAR	Pushbutton. Push to exit any operation selected by one of the FUNCTION controls (the front panel returns to the previous set-up) or to clear a rejected entry condition.
5	FREQ STEP	Repeating pushbuttons. Press and release for single action. Press and hold for repeating action.
	↑	Increments frequency.
	↓	Decrements frequency.
6	MEMORY LOCATION	Thirteen pushbuttons used to determine the memory location address. Press one of the MEMORY controls before using the MEMORY LOCATION controls.
	NEXT ↓	Selects memory location n-1 where n is the previously selected memory location.
	NEXT ↑	Selects memory location n + 1 where n is the previously selected memory location.
	TOP	Selects the memory location designated as TOP.
	00 through 99	Use a combination of two controls to designate a memory location (not all combinations are valid).
7	MEMORY	Three pushbuttons used to select the five memory functions. A MEMORY LOCATION is required after a MEMORY control is pressed.
	STORE INSERT	Push to store the current front panel setup at the MEMORY LOCATION. Press SHIFT and then this control to insert the current front panel setup in MEMORY LOCATION plus one.

Figure 4-4. Keyboard (cont)

REF. NO.	NAME	FEATURE
	TOP	Push to define MEMORY LOCATION as the TOP memory location in the memory stack.
	RECALL DELETE	Push to recall the front panel setup stored in MEMORY LOCATION. Press SHIFT and then this control to delete the contents of the MEMORY LOCATION.

Figure 4-4. Keyboard (cont)

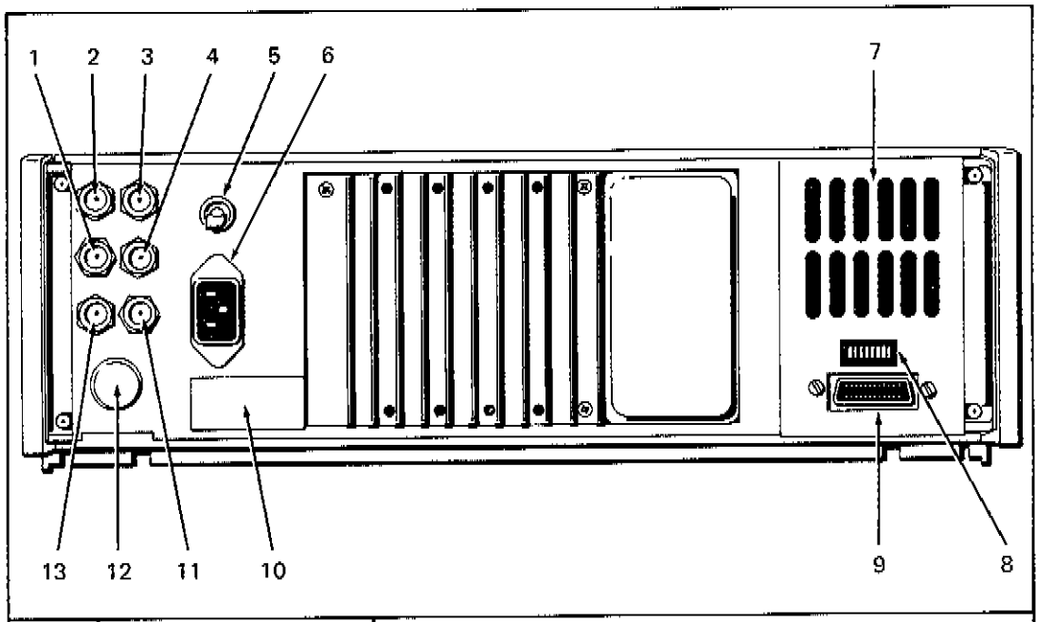

REF. NO.	NAME	FEATURES
1	MOD IN	BNC connector. In parallel with the front panel MOD IN connector. There will be a signal present at this connector if, and only if, either the front panel INT AM or INT FM/ØM MODULATION control is lit or special function 71 is selected.
2	PEN LIFT	BNC connector. The Z-axis blanking/penlift signal is a TTL level output present at this connector for use with external recorders. This TTL output is high during sweep retrace and until the next sweep starts. This output will sink 200 mA in the low state and will withstand +45V in the high state.

Figure 4-5. 6070A/6071A Rear Panel Features

REF. NO.	NAME	FEATURE
3	OUT VALID	BNC connector. This TTL signal is low when instrument output is potentially unsettled.
4	AUX OUT	BNC connector (present only when the 607XA-831 Auxiliary Output Option is installed). A sample of the RF output signal. Amplitude >-18 dBm.
5	MAIN POWER	Toggle switch that interrupts (OFF) or connects (ON) line power to the instrument.
6	Power Receptacle	Receptacle for connecting line power to the instrument. Be sure that the line power applied to this terminal is the correct voltage and frequency for this instrument. Observe the WARNING and CAUTION on the rear panel decal.
7	Fan	Cooling fan. Maintain at least three inches of clearance behind the instrument for adequate ventilation.
8	IEEE-488 INTERFACE Switches	Toggle switches. Each combination of positions for switches a1 through a5 determines the IEEE-488 address of the instrument. The LISTEN ONLY switch selects listen only operation. Listen only operation is described in Section 6.
9	IEEE-488 INTERFACE Connector	Standard 24-pin IEEE-488 female cable connector.
10	Fuses	Main power fuse. Replace with 3A, 250V fast-blow type fuse.
11	REF IN	BNC connector. External timebase reference signal is applied to this connector.
12	RF OUT	This connector will be present only when the 607XA-830 Rear Panel Output Option is installed. Type N connector. RF output of the instrument is present on the connector when the front panel RF OUTPUT control is lit.
13	REF OUT	BNC connector. The TTL level internal 10 Mhz timebase signal is present at this connector.

Figure 4-5. 6070A/6071A Rear Panel Features (cont)

Section 5
Local Operation

5-1. INTRODUCTION

5-2. The information in this section of the manual describes both general and specific operation procedures using front and rear panel controls, connectors, and indicators (local operation). The general types of operations are described in the main body of this section, but the procedures specific to one area of operation are separated into subsections. For example, all of the specific procedures for frequency operations are listed in section 5A, amplitude operations are listed in section 5B, etc. If you have any questions, contact your nearest John Fluke Sales Representative or the John Fluke Mfg. Co., Inc.; P.O. Box 43210; Mountlake Terrace; WA 98043; telephone (206) 774-2211. The John Fluke Sales Representatives are listed in Appendix A at the rear of this manual. For information about the location or basic function of any feature, refer to the Familiarization section. For information about operating the instrument via the IEEE-488 bus, refer to the Remote Operation (IEEE-488, 1978) section.

5-3. KEYBOARD OPERATIONS

5-4. Keyboard Operations are used to change the instrument parameters such as frequency or amplitude, to select special functions, to create a sequence of front panel setups, or to access the front panel setups stored in memory. Keyboard controls are pressed in a specific sequence for each type of Keyboard Operation. There are seven types of Programming Operations:

1. FUNCTION/DATA/UNITS control sequence is used to enter instrument parameters labeled above the FUNCTION switches, such as displayed frequency. The instrument will execute the sequence when the UNITS control is pressed.

2. FUNCTION/UNITS control sequence is used to change the units of the displayed deviation amplitude. This sequence works for only the FM/ØM and AMPL FUNCTION controls.

3. SHIFT/FUNCTION/DATA/UNITS control sequence is used to enter instrument parameters labeled below the FUNCTION controls, such as the size of the frequency step (FREQ STEP). The instrument will execute the sequence when the UNITS control is pressed. The SHIFT control will turn off when the FUNCTION control is pressed.

4. SHIFT/DATA control sequence is used to select one of the Special Functions of the instrument. The instrument will execute the special function command when the second DATA control is pressed.

5. MEMORY/MEMORY LOCATION control sequences are used to store (STORE), to recall (RECALL), and to define the top location of the memory

listing(TOP). The instrument will execute the sequence when the second MEMORY LOCATION is entered.

6. SHIFT/MEMORY/MEMORY LOCATION control sequence is used to delete (DELETE) information from a memory location and to insert a front panel setup into memory at the memory location immediately above the selected memory location (INSERT). The SHIFT control turns off when the MEMORY control is pressed.

7. CLEAR control clears the entry being made and exits the Keyboard Operation.

5-5. EDIT KNOB OPERATIONS

5-6. Edit Knob operations allow the operator to manually position the Bright Digit in the display and to change the numerical value of the Bright Digit by using a rotary digital control knob. There are five types of Edit Knob Operations:

1. SETTING THE BRIGHT DIGIT INTO A DISPLAY - The FREQ EDIT, AMPL EDIT, and MOD EDIT controls are used to place the Bright Digit in the corresponding displays.

2. CHANGING THE POSITION OF THE BRIGHT DIGIT - The DIGIT controls move the Bright Digit to a different decimal position in the displays. These controls cannot move the Bright Digit to a different display. These controls are repeating. That is, the controls will repeat their function until they are released or until the Bright Digit reaches the limit of the display. The limits of the displays are the extreme left and extreme right digits except that the upper limit of the FREQUENCY Display is the 100 MHz position.

3. CHANGING THE VALUE OF THE BRIGHT DIGIT - Rotating the Edit Knob will change the value of the Bright Digit (25 numeric counts for each revolution of the Edit Knob).

4. FIXED RANGE OPERATION - If Fixed Range operation is selected (special function 31), the Edit Knob controls cannot select a value outside the current range. The FXD RNG indicator is on when the instrument is in Fixed Range operation.

5. OFF EDIT - The OFF EDIT control disables the Edit Knob and removes the Bright Digit.

5-7. MODULATION OPERATIONS

5-8. The MODULATION controls are used to enable modulation, select the type of coupling for the MOD IN connector, and set the level of the MOD OUT signal.

1. Four controls (INT AM, EXT AM, INT FM/0M, and EXT FM/0M) enable (control lit) or disable (control dark) the selected modulation. These four controls have two types of interlocks:

a. Only one type of external modulation can be selected (EXT AM or EXT FM/ØM).

b. Only one source can be selected for each type of modulation (INT AM or EXT AM and INT FM/ØM or EXT FM/ØM).

2. DC COUPLED selects ac coupling (control dark) or dc coupling (control lit) of the source applied to the MOD IN connector.

3. MOD OUT control sets the level of the signal that is present at the MOD OUT connector between zero and 2V pk-to-pk. The signal will be present at the MOD OUT connector only when special function 71 has been selected or when either the INT AM or the INT FM/ØM control is lit.

5-9. SWEEP OPERATIONS

5-10. The SWEEP controls enable or disable sweep or determine the sweep speed. The sweep characteristics -- sweep symmetry, sweep increment, sweep width, and sweep speed -- are entered by SHIFT/DATA or SHIFT/FUNCTION/DATA/UNITS Keyboard Operations.

1. AUTO enables repetitive sweep.

2. SINGLE enables one sweep.

3. MANUAL enables manual sweep using the Edit Knob (the Bright Digit disappears from the display).

4. OFF disables sweep operation.

5-11. RELATIVE OPERATIONS

5-12. The REL FREQ and the REL AMPL controls enable (control lit) or disable (control dark) relative frequency and relative amplitude operations, respectively. Section 5A describes relative frequency operation in detail. Section 5B describes relative amplitude operations in detail.

5-13. RF OUTPUT OPERATION

5-14. The ON RF OUTPUT control applies (control lit) the RF output signal to the RF OUTPUT connector or removes (control dark) the RF OUTPUT signal from the RF OUTPUT connector. The UNCAL annunciator flashes while the RF output signal is removed from the RF OUTPUT connector (the signal amplitude present at the RF OUTPUT connector is not the same as the selected amplitude).

5-15. INTERROGATE OPERATION

5-16. While the INTERROGATE control is pressed, the instrument displays the UNCAL or rejected entry (REJ ENT) error codes. If UNCAL is on or flashing, press INTERROGATE to display the UNCAL error codes. If the REJ ENT annunciator is on or flashing, press INTERROGATE to display the REJ ENT error codes. The REJ ENT annunciator is disabled if the UNCAL annunciatoris on or flashing. The UNCAL condition must be cleared before any rejected entry error codes can be displayed. The pullout card (under the front panel) or material in Section 5E can be used to interpret the error codes.

5-17. RETURN TO LOCAL OPERATION

5-18. The IEEE-488 interface can place the instrument in remote operation via the IEEE-488 Interface. Press the LOCAL control to return to local control (the IEEE-488 interface can also return the instrument to local control).

Section 5A
Frequency Operations

5A-1. INTRODUCTION

5A-2. The information in this section of the manual describes the procedures for all frequency operations such as keyboard entries, frequency sweep, editing frequency, and relative frequency operation. When these operations are performed, the instrument will autorange through the frequency bands as required. Since the frequency band changes produce output transients, fixed range operation (special function 31) is provided to prevent the instrument from changing ranges while the operator uses the Edit Knob to examine a portion of the spectrum near the edge of a frequency band. The location of all front panel features is shown in the foldout at the rear of this manual.

5A-3. SWITCHING CHARACTERISTICS

5A-4. The frequency range of the instrument is divided into bands. As Table 5A-1. shows, the 6070A has 7 bands and the 6071A has 11. When the frequency crosses the band edges, transients may be created, so operation in these band edge areas may be undesirable. Fixed range operation allows the user to control frequency using the Edit Knob but prevents the instrument from changing bands until the user disables fixed range operation or reprograms frequency. Fixed range operation is described later in this section.

Table 5A-1. Frequency Bands

LOWER LIMIT	SPECIFIED BAND*		UPPER LIMIT
	FROM	TO	
100 kHz	200 kHz	62.499999 MHz	64.999999 MHz
60 MHz	62.5 MHz	89.999999 MHz	91.999999 MHz
87 MHz	90 MHz	124.999999 MHz	126.999999 MHz
120 MHz	125 MHz	179.999999 MHz	184.999999 MHz
175 MHz	180 MHz	249.999999 MHz	254.999999 MHz
254 MHz	250 MHz	359.999999 MHz	364.999999 MHz
355 MHz	360 MHz	519.999999 MHz	525.999999 MHz
6071A Only			
500 MHz	520 MHz	599.999998 MHz	619.999998 MHz
580 MHz	600 MHz	719.999998 MHz	729.999998 MHz
710 MHz	720 MHz	874.999998 MHz	894.999998 MHz
855 MHz	875 MHz	1039.999998 MHz	1051.999998 MHz

*The UNCAL annunciator is dark in the specified band.

5A-5. FREQUENCY CIRCUITRY

5A-6. The frequency selected by the operator affects several other parameters such as the maximum allowable modulation or the RF output signal amplitude. As a result, each change in the selected frequency causes the following internal actions in the sequence presented:

1. The instrument checks to see if relative frequency operation is selected. If it isn't, the instrument calculates actual RF output frequency to be programmed by adding a reference frequency of zero to the displayed frequency. If relative frequency operation is selected, the stored reference frequency is added to the displayed relative frequency to find the actual RF output frequency to be programmed.

2. If the the RF output frequency selected is not within the hardware limitations of the instrument, either the UNCAL annunciator will light or the REJ ENT annunciator will flash. If the REJ ENT annunciator flashes, the instrument does not change the RF output frequency. If the UNCAL annunciator lights, the instrument produces the frequency (if theUNCAL annunciator flashes, the frequency is produced, but some other interdependent parameters, such as level or modulation, will be limited). If the selected RF output frequency is within the hardware capabilities of the instrument, the selected frequency is convereted into a frequency band number and a fundamental frequency between 250 to 520 MHz. The fundamental frequency is then divided by 1, 2, or 4; heterodyned; or, in the 6071A, multiplied by 2 to produce the selected RF output frequency.

3. If fixed range operation is selected, the instrument only produces selected RF output frequencies within the current frequency band. During fixed range operation, the Edit Knob may be used to change frequency, amplitude, or modulation.

4. If AM is enabled (INT AM or EXT AM control lit), the AM rate is checked against the limits imposed by the selected frequency. The UNCAL indicator lights or flashes if the limits are exceeded. If AM is disabled, this step is omitted.

5. If angle modulation is enabled, the angle modulation hardware commands are computed since they are directly dependent upon the frequency selected. This step is omitted if angle modulation is disabled.

6. At this point, the instrument actually begins to alter the hardware configuration to produce the selected frequency. The output sequence is chosen to minimize transients when shifting from one frequency to another.

7. Since the instrument usually has automatic amplitude compensation enabled, the final step is the computation and application of an amplitude correction factor for the selected frequency. The programmed amplitude is multiplied by the amplitude correction factor to compensate for level inaccuracies that are frequency dependent. If automatic amplitude correction is disabled (special function 81), the correction factor is 1.0 (and has no effect on RF amplitude).

5A-7. FREQUENCY KEYBOARD OPERATIONS

5A-8. The FREQ/DATA/UNITS control sequence is used to enter frequency (see the foldout at the rear of the manual). First, the FREQ control is pressed to tell the instrument that frequency is to be entered. Next, the numerical value of the desired frequency is entered using the DATA controls. Finally, the UNITS control is pressed to indicate that the numerical value entered is MHz, kHz, or Hz. A frequency from 100 kHz to 525.999999 MHz may be entered, with 1 Hz resolution, on the Model 6070A. The

output is uncalibrated (UNCAL and FREQ annunciators turn on, see the INTERROGATE Operation material in section 5E) below 200 kHz and above 519.999999 MHz. On the Model 6071A, a frequency from 100 kHz to 520 MHz may be entered with 1 Hz resolution. A frequency from 520 MHz to 1051.999998 MHz may be entered with 2 Hz resolution on the Model 6071A. During fixed range operation, the resolution of an entered frequency is 1 Hz up to 519.999999 MHz. The output is uncalibrated below 200 kHz and above 1039.999998 MHz. All frequency entries are rounded off. For example, an entry of 12.4 Hz is rounded off to 12 Hz. Entries that exceed the frequency field are rejected. For example, the instrument would reject 10994 MHz.

5A-9. FREQUENCY EDIT OPERATIONS

5A-10. The Edit Knob controls are used to manually tune thedisplayed frequency (see the foldout at the rear of this manual). This displayed frequency can be the RF output of the instrument, the relative frequency, or the programmed frequency (fo) during AUTO sweep operation (relative frequency and AUTO sweep are discussed in detail later in this section). Pressing FREQ EDIT places the Bright Digit in the FREQUENCY Display. Pressing the DIGIT controls moves the Bright Digit in the display. Rotating the Edit Knob changes the value of the Bright Digit 25 numeric counts for each revolution. Pressing OFF disables the Edit Knob control (the Bright Digit disappears from the display).

5A-11. FREQUENCY SWEEP OPERATIONS

5A-12. Introduction

5A-13. There are three types of sweep operations: AUTO, SINGLE, and MANUAL. The instrument repeatedly sweeps frequency in AUTO sweep operation. The instrument completes one sweep and stops in SINGLE sweep operation. The Edit Knob is used to manually adjust frequency in MANUAL sweep operation.

5A-14. The operator has control over five parameters that affect the frequency sweep operations. Four parameters: frequency, sweep width, sweep increment, and symmetry define the sweep. A fifth parameter, sweep speed, and the instrument mode of operation (HI DEV on or off), work in conjunction with the SLOW SWEEP control to determine the length of time it takes the instrument to complete an increment of each sweep. These parameters can be reprogrammed during sweep operation, but the entry will be rejected (REJ ENT annunciator flashes) if the parameter requires frequencies beyond the capabilities of the instrument. If the sweep is not enabled, the instrument may accept parameter combinations that require frequencies beyond the limits of the instrument, but the actual sweep operation will be rejected when attempted.

5A-15. The programmed frequency (fo) is programmed like any other displayed frequency and can be any frequency the instrument can produce. Sweep width (SWP WDTH), the range of frequency to be swept, can be programmed either positive or negative from 1 Hz to 1051.999999 MHz. Sweep increment (SWP INCR), the size of the digital steps that make up the sweep, can only be positive and can be programmed from 1 Hz to 1051.999999 MHz. Figure 5A-1 shows the relationship of sweep width and sweep increment.

5A-16. Symmetrical sweep is selected by the power-on sequence and by special function 50. Special function 51 selects asymmetrical sweep. The ASYM indicator lights to indicate that asymmetrical sweep is enabled whether the instrument is actually sweeping or not. Figure 5A-2 shows the difference between symmetrical and asymmetrical sweep and the effects of the polarity of the sweep width. When symmetrical sweep is selected, the instrument sweeps one half of the sweep width on either side of fo (programmed frequency). If sweep width is positive, the instrument starts at one half of the sweep width below fo and stop at one half of the sweep width above fo. If asymmetrical sweep is

selected and if sweep width is positive, the instrument sweeps from fo to one sweep width above fo, or, if sweep width is negative, the instrument sweeps from fo to one sweep width below fo.

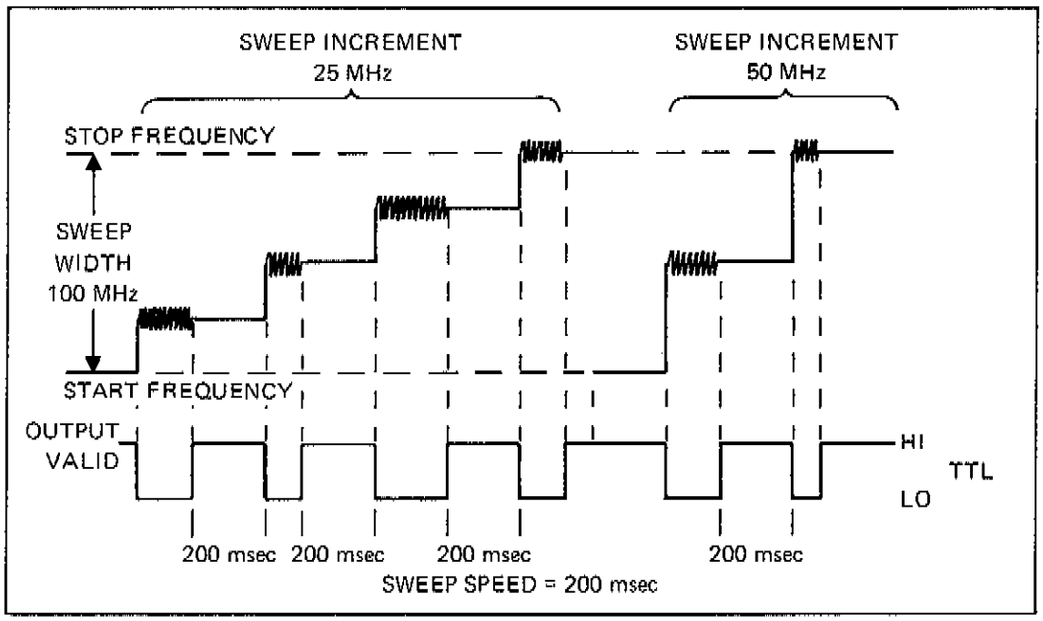

Figure 5A-1. Sweep Width, Sweep Increment, and Sweep Speed

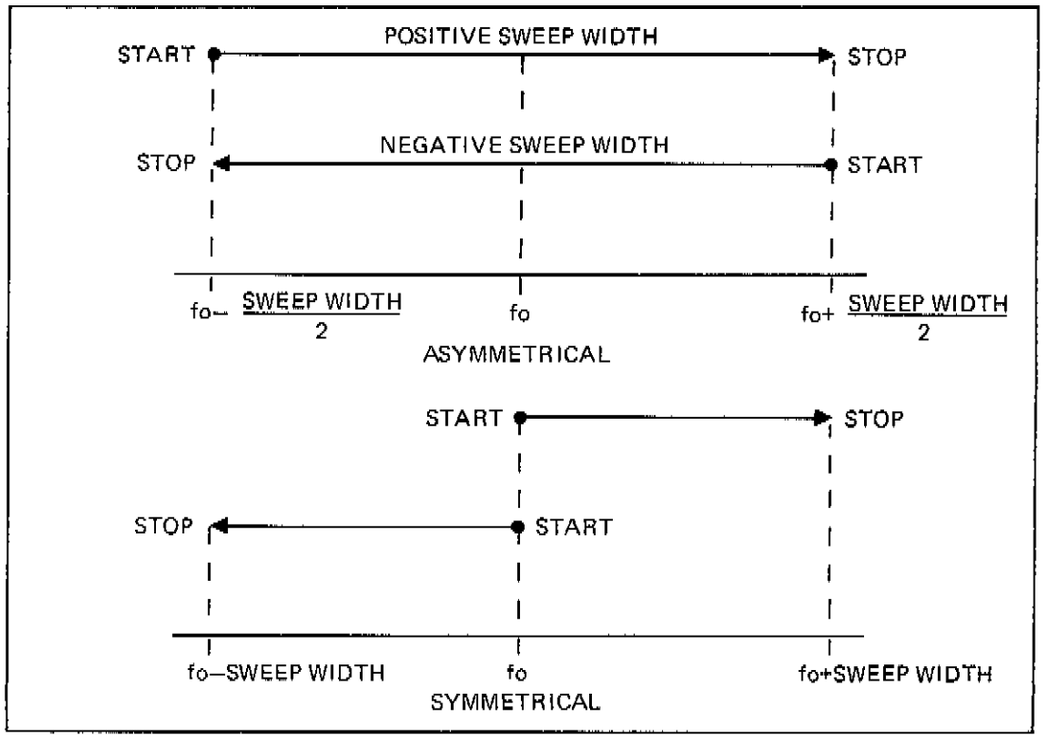

Figure 5A-2. Sweep Symmetry

5A-17. Sweep speed may be any one of six rates selected by the SLOW control and a set of special functions. If the SLOW SWEEP control is dark, the instrument programs each sweep step to the fastest possible rate (specified frequency has no effect). If SLOW SWEEP is lit, the instrument dwells at each frequency for a specified length of time after the RF output signal settles (output is valid). This dwell time (sweep speed) is selected by special functions 40 through 44.

5A-18. When the POWER control is set to the ON position, the standardinstrument establishes the following sweep parameters (instruments equipped with the 607XA-570 Non-Volatile Memory Option return to the last front panel setup):

fo	250 MHz
SWP WDTH	100 MHz
SWP INCR	1 MHz
Sweep	Symmetrical
Sweep Speed	Normal

5A-19. Auxiliary Outputs

5A-20. There are three auxiliary outputs, SWP OUT, PEN LIFT, and OUT VALID. SWP OUT (front panel) and PEN LIFT (rear panel) are provided for external recording devices such as oscilloscopes or X-Y recorders. SWP OUT is an X-axis drive signal that is a stepped from 0 to 10V as an analog of the sweep. (See the procedure at the end of this section for calibrating recorders and oscilloscopes using this output.) SWP OUT is 0V when sweep is off. The PEN LIFT signal is used either for X-Y recorder penlift applications or for oscilloscope Z-axis blanking. PEN LIFT is a TTL level high output during sweep retrace (high until the next sweep starts). OUT VALID is provided to let external devices know when all parameters of the instrument output are settled. OUT VALID is a TTL low output when the frequency, amplitude, or modulation of the signal at the RF OUTPUT connector are potentially unsettled.

5A-21. Sweep Width Keyboard Operation

5A-22. Sweep width is entered using theSHIFT/FUNCTION/DATA/UNITS control sequence. Any integer value from 1 Hz to 1051.999999 MHz can be entered for sweep width. All entries in fractions of a hertz are rounded to the nearest hertz. Entries that exceed the capacity of the sweep-width field are rejected. Sweep width can be positive or negative (the sign determines whether frequency is swept up or swept down). Sweep width is entered in four steps:

1. Press SHIFT to enter a parameter labeled under the FUNCTION controls.
2. Press SWP WDTH to begin the sweep-width entry.
3. Enter sign and value of the sweep width using the DATA controls.
4. Terminate the sweep-width entry using the appropriate UNITS control.

5A-23. Sweep Increment Keyboard Operation

5A-24. Sweep Increment is entered using the SHIFT/FUNCTION/DATA/UNITS control sequence. Any positive integer from 1 Hz to 1051.999999 MHz can be entered as sweep increment. Entries in fractions of a hertz are rounded to the nearest hertz. Entries that exceed the capacity of the sweep-increment field are rejected. Sweep increments greater than sweep width can be entered, but the instrument will sweep to the limits of the sweep width and stop without completing the sweep increment. Sweep increment is entered in four steps.

1. Press SHIFT to enter a parameter labeled under the FUNCTION controls.

2. Press SWP INCR to begin the sweep increment entry.

3. Enter the value of the sweep increment using the DATA controls.

4. Terminate the sweep increment entry using the appropriate UNITS control.

5A-25. Sweep Symmetry Keyboard Operation

5A-26. Symmetrical or asymmetrical sweep is selected using special functions 50 and 51, respectively. To change sweep symmetry, press SHIFT and then enter the correct code using the DATA controls. If the change will cause an invalid sweep, the entry is rejected. The ASYM indicator is on when asymmetrical sweep is selected and off when symmetrical sweep is selected.

5A-27. Sweep Speed Keyboard Operation

5A-28. Sweep speed is determined by the status (off or on) of the SLOW control and by the slow sweep special function selected. If SLOW is off (dark), the instrument sweeps as fast as possible (no allowance ismade for frequency switching settling time). If SLOW is on (lit), the time per step is the sum of an allowance made for frequency switching settling time and a wait time selected by the special functions listed in Table 5A-2.

Table 5A-2. Sweep Speed Special Functions

SPECIAL FUNCTION	SLOW CONTROL STATUS	
	LIT*	DARK
40	0 ms	The instrument will step through the frequencies as fast as possible -- about 20 ms.
41	50 ms	
42	100 ms	
43	200 ms	
44	500 ms	

*The instrument waits this amount of time after the RF output has settled before changing the frequency of the RF output signal to the next step of the sweep. Sweep speed is the stable period during each sweep step, but the total time between each step is not specified.

5A-29. AUTO Sweep Operation

5A-30. During AUTO sweep operation, the instrument repeatedly sweeps frequency according to the defined sweep parameters. Press the AUTO control to enable AUTO sweep operation. Press the OFF SWEEP control to disable AUTO sweep operation. During AUTO sweep, the indicator between the SINGLE and the AUTO control lights to indicate that the instrument is sweeping. During AUTO sweep operation, fo appears in the FREQUENCY Display and can be adjusted using the Edit Knob. If the Edit Knob is not used, the FREQUENCY Display is not updated so that frequency can be swept as fast as possible. Figure 5A-3 shows the timing relationship between the sweep and the three auxiliary outputs during AUTO sweep operation. The figure assumes that sweep increment is positive; (the if sweep width were negative, the sweep would start at a higher frequency and sweep to a lower frequency). Both symmetrical and asymmetrical sweep are illustrated, but the stepping effect of sweep increment is not shown.

5A-31. SINGLE Sweep Operation

5A-32. During SINGLE sweep operation, the instrument sweeps frequency once according to the defined sweep parameters and then stops. Press the SINGLE control to

initiate a single sweep. The indicator between the SINGLE and AUTO controls turns on for the duration of the sweep and the RF output frequency appears in the FREQUENCY Display. All FUNCTION and MEMORY controls are disabled during SINGLE sweep operation. Figure 5A-4 shows the timing relationships between the sweep and the three auxiliary outputs during SINGLE sweep operation. Note that the RF output frequency goes to the start frequency when the SINGLE control is pressed and stays there as long as the control is pressed or for a minimum of 1 second, whichever occurs first. After the control is released (or the minimum time of 1 second elapses), there is a 100 ms delay to allow the pen to engage. Following the sweep, there is another 100 ms delay to allow the pen to lift. The frequency retraces to fo after this delay and exit sweep operation. Press SINGLE to repeat the sweep.

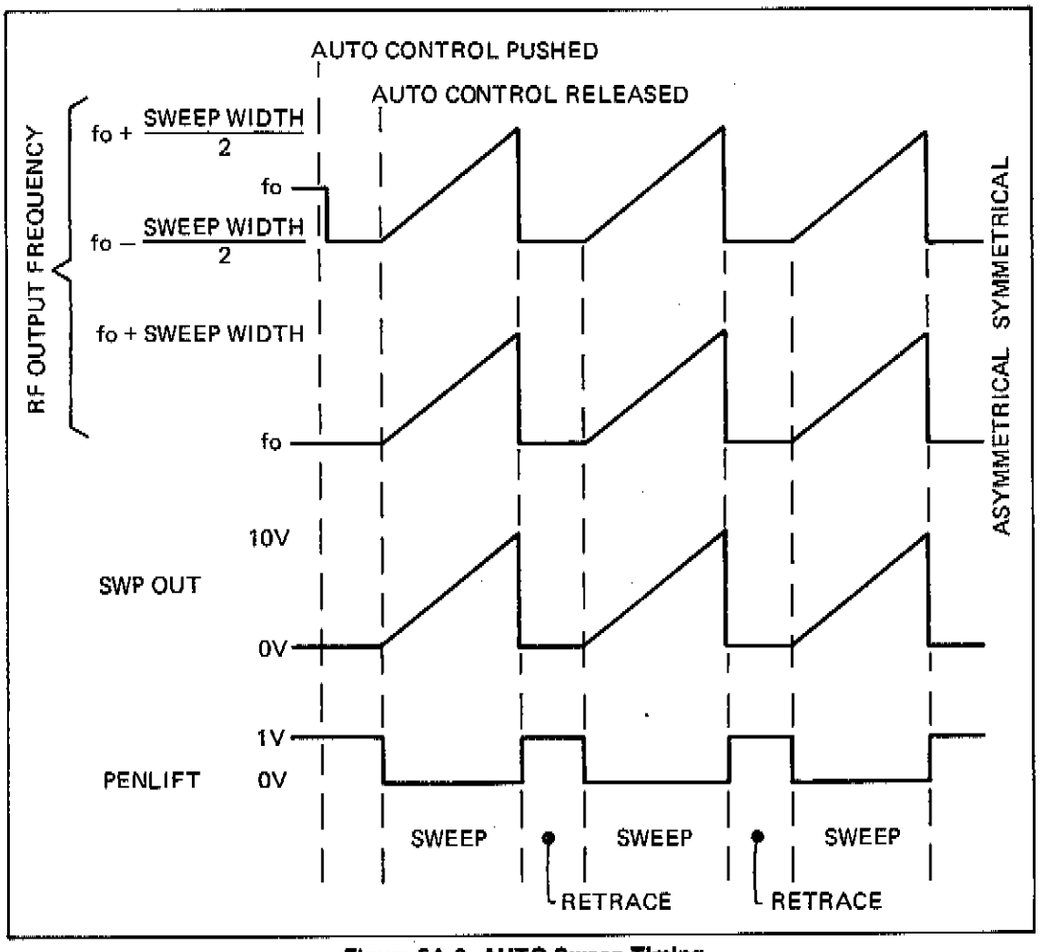

Figure 5A-3. AUTO Sweep Timing

5A-33. MANUAL Sweep Operation

5A-34. MANUAL sweep operation allows the user to sweep frequency using the Edit Knob (the Bright Digit feature is disabled). Press the MANUAL control to enable MANUAL sweep. Press OFF SWEEP to disable MANUAL sweep. The signal present on the SWP out connector tracks the Edit Knob during Manual Sweep. This feature is useful in setting up scales on an X-Y recorder prior to making records in SINGLE sweep. When MANUAL sweep operation is enabled during AUTO or SINGLE sweep, the

frequency remains at the same value and the indicator between the SINGLE and AUTO controls turns off (dark). The actual RF output frequency appears in the FRQEUENCY Display. (If SINGLE or AUTO is pressed, the instrument returns to the start frequency before initiating the sweep operation.) If the SLOW control is lit during MANUAL sweep operation, the instrument response to the Edit Knob will be as slow as the sweep speed selected. In the slower sweep speeds, the Edit Knob will seem to have no effect upon the instrument for several seconds.

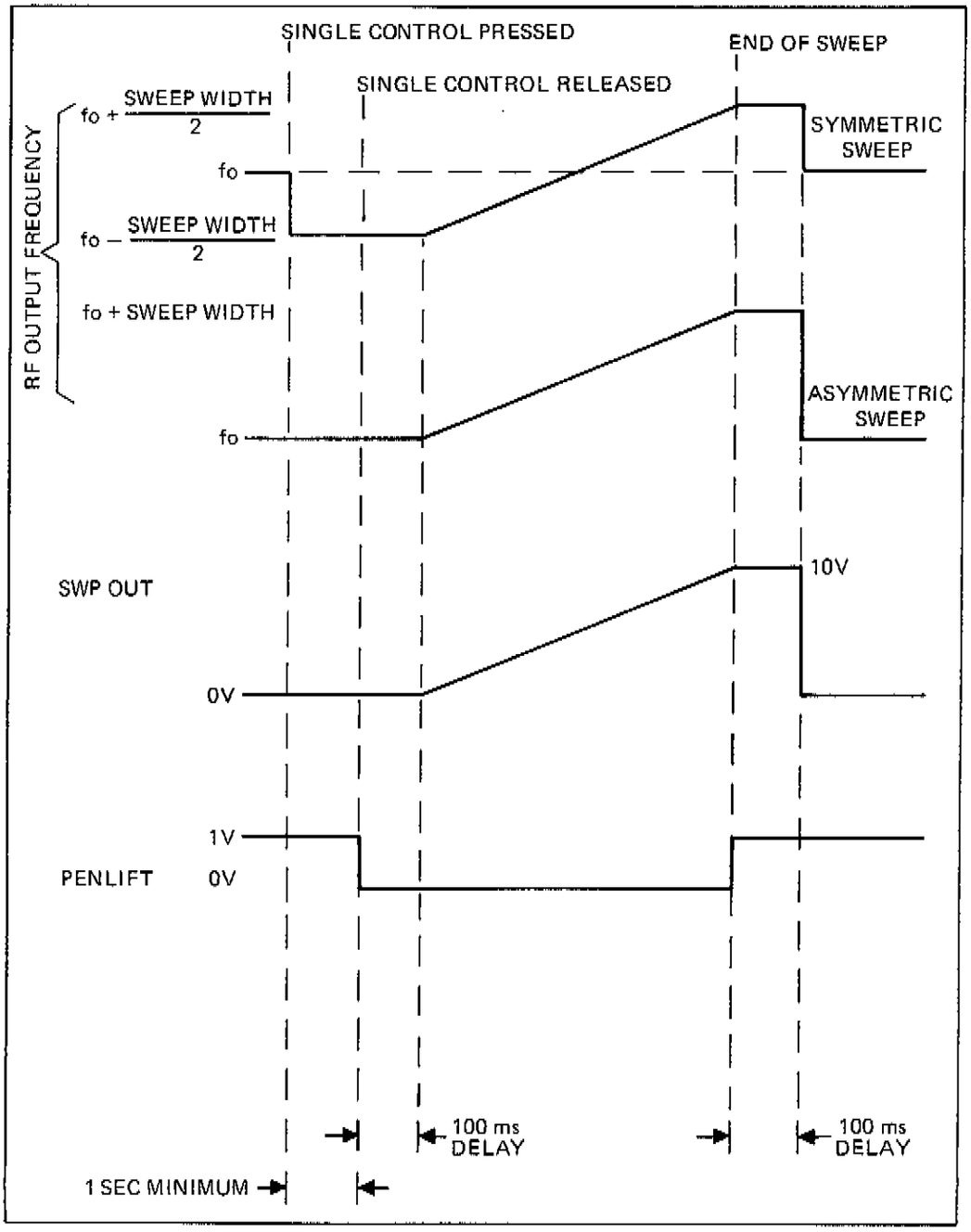

Figure 5A-4. SINGLE Sweep Timing

5A-35. FREQUENCY STEP KEYBOARD OPERATIONS

5A-36. The FREQ STEP (not the FREQ STEP FUNCTION) controls allow the user to increment or decrement the RF output frequency by an arbitrary amount previously entered as the frequency step size (using the FREQ STEP FUNCTION control). The FREQ STEP controls are particularly useful in channelized applications because they allow the user to control frequency while the Edit Knob is being used to simultaneously adjust level or modulation.

5A-37. RELATIVE FREQUENCY OPERATION

5A-38. Relative frequency operation lets the user define a reference frequency and then enter, step, sweep, or manually tune a displayed frequency relative to the defined reference frequency. The actual frequency of the RF output signal is the sum of the reference frequency and the displayed relative frequency. To define a reference frequency, first use any of the frequency operations described in this section to establish the desired reference frequency in the FREQUENCY Display and then press the REL FREQ control so that is lit. The FREQUENCY Display goes to zero (relative frequency) and the frequency that was in the display becomes the reference frequency. The relative frequency that appears in the FREQUENCY Display can be manually tuned (in fixed range or autorange operation) using the Edit Knob, and swept, stepped, or entered using the keyboard. The actual frequency of the RF output signal appears in the FREQUENCY Display while the FREQ FUNCTION control is pressed. To exit relative frequency operation, press the REL AMPL control so that it is dark. The last frequency programmed (reference frequency + relative frequency) appears in the FREQUENCY Display.

5A-39. Since only the relative frequency is displayed, it is possible for the user to select an output frequency (reference frequency + relative frequency) that is outside of the specified range of the instrument or that forces one of the secondary functions to be programmed outside of specified limits. In these cases, the UNCAL annunciator lights. Press and hold the INTERROGATE control to display the UNCAL error codes. Interpret these codes using the pullout card under the front panel or the material in Section 5E.

5A-40. FIXED RANGE OPERATION

5A-41. Fixed range operation allows the operator to use the Edit Knob to examine an area around a nominal band switching point without changing range (changing range can produce significant output transients). If the instrument is in fixed range operation (FXD RNG indicator on), the Edit Knob can be used to select frequencies within the limits of the frequency band plus a small overrange window above and below that band. Table 5A-1 lists the frequency bands and overrange windows for both the 6070A and the 6071A. Select special function 31 to enable fixed range operation, or select special function 30 to disable fixed range operation. Fixed range operation also has implications for amplitude and modulation operation. See the Section 5B and Section 5C, respectively, for information about the effects of fixed range operation on amplitude and modulation operations.

Section 5B
Amplitude Operations

5B-1. INTRODUCTION

5B-2. The information in this section describes the three types of operations used to select the amplitude of the RF output signal: Programming Amplitude, Manually Adjusting Amplitude, and Relative Amplitude Operations. Amplitude can be entered in volts, dB, or dBm.

5B-3. Coarse amplitude adjustment is provided by a 23-step attenuator (each step covers a 6 dB range) and by a 6-dB switched amplifier. Fine amplitude adjustment is provided by a vernier DAC (Digital-to-Analog Converter).

5B-4. Amplitude can be selected from +19 dBm to -140 dBm (2V to 22 nV) when the selected frequency is below 520 MHz. Amplitude can be selected from +13 dBm to -140 dBm (1V to 22 nV) when the selected frequency is 520 MHz and above. If automatic level correction is enabled, the amplitude is corrected each time frequency is programmed (automatic level corrections are enabled by the power on sequence in standard instruments).

5B-5. The amplitude correction is a factor that compensates for frequency dependent losses and is a function of the frequency and the attenuator settings. The amplitude correction factor is based on a matrix formed by 11 frequency values and the 24 possible combinations of attenuator settings and the 6dB amplifier. The amplitude correction values for this 11 by 24 matrix are determined during calibration and stored on a PROM for use during automatic level correction operation.

5B-6. The combination of RF amplitude and AM depth is limited to an envelope peak which is within the capability of the output amplifier. The UNCAL and AMPL annunciators light when the envelope peak of the combination of RF amplitude and AM depth is greater than +19 dBm (2V) peak below 520 MHz or +13 dBm (1V) peak at 520 MHz and above.

5B-7. The maximum programmable resolution in volts varies from 1% to 0.1% depending upon the quantity being displayed. The actual hardware resolution (available at the RF OUTPUT connector) may be more or less than the displayed resolution depending upon the value of the Amplitude DAC (see Table 5B-1).

5B-8. AMPLITUDE SWITCHING CHARACTERISTICS

5B-9. As amplitude autoranges or is adjusted (using the Edit Knob) up or down in 0.1 dB or 1 dB steps, the step attenuator is stepped every 6 dB and the Amplitude DAC is reset to 5.9 or 5 dB, respectively, to produce the desired 0.1 or 1 dB changes. Since the step attenuator is an electromechanical device, these changes produce level transients in the

RF output signal. Table 5B-1 shows where to expect these changes. To insure that these transients never exceed 6 dB, the instrument programs the maximum combination of the current attenuation and the previous attenuation first and then programs the current DAC setting followed by the final attenuator setting. The attenuator (or 6 dB amplifier) setting calculation is based on the uncorrected value of the output amplitude and remains unchanged regardless of the amplitude loss correction. Table 5B-1 defines those areas in which transients can be expected. If operation in these areas is undesirable, select fixed range operation. Fixed range operation is described later in this section.

Table 5B-1. Amplitude Range and Resolution Characters

$$\text{AMPLITUDE (volts)} = \frac{\text{(Corrected DAC Value) (1V)}}{1840\ (2^n)\ \text{(correction factor)}}$$

Where:

n = 0 means that the 6 dB amplifier is enabled.
n = 1 means that the 6 dB amplifier is disabled and that no attenuation is selected.
n < 0 means n multiples of 6 dB attenuation is selected.

EXAMPLE: The table below shows the implications of the above formula when n = 0.

DAC COUNT	AMPLITUDE * dBm	AMPLITUDE * VOLTS	6070A AND 6071A (BELOW 520 MHz)	6071A ONLY (520 MHz AND ABOVE)
4096	+20		7 dB range reserved for level correction	13 dB correction range available
2048				
1840	+13	1	6 dB vernier DAC range (AM and level corrections off)	
1024				
920	+7	0.5	6 dB vernier DAC range (AM on, level corrections off)	6 dB vernier DAC range (AM and level corrections off)
512				
460	+1	0.25	Fixed Range	6 dB vernier DAC range (AM on, level corrections off)
256				
230	UNCAL			Fixed Range
128				
115				
100	DAC IS NEVER PROGRAMMED BELOW THIS POINT			

*Before level corrections are applied.

5B-10. AMPLITUDE KEYBOARD OPERATION

5B-11. Amplitude entries are made using the AMPL FUNCTION/DATA/UNITS control sequence (see the foldout at the rear of the manual for the location of the controls). First, press the AMPL FUNCTION control to tell the instrument that amplitude is to be programmed. Next, enter the numerical value and algebraic sign (if

required) of the desired amplitude using the DATA controls. Finally, press the appropriate UNITS control to indicate that the amplitude is dB(m), uV, mV, or V.

5B-12. AMPLITUDE EDIT OPERATION

5B-13. Amplitude can be manually adjusted using the Edit Knob. Press the AMPL EDIT control to place the Bright Digit in the same position it was last at in the AMPLITUDE Display. (If the Bright Digit has not been moved since POWER ON, it will appear in the 1 dB position in standard instruments.) The DIGIT controls will shift the Bright Digit to a different decimal position. Once the Bright Digit reaches a limit in the AMPLITUDE Display, the display will scroll horizontally to maximum or minimum resolution (depending upon which direction the Bright Digit was being moved). Rotating the Edit Knob changes the numerical value of the Bright Digit at a rate of 25 counts per revolution. Each of these 25 count positions can be felt. This makes it easy to select discrete numerical values.

5B-14. Amplitude autoranges up from the lowest resolution to the highest, but will only autorange down to the lowest resolution of the display. For example, suppose that the instrument autoranged in amplitude to the upper limit of the display. The instrument could autorange down to 1 volt. The DIGIT control must be used to go any further. If the instrument is in fixed range operation (the FXD RNG indicator lit), the range of amplitude adjustment is restricted to about 20 dB, but amplitude will be within calibrated limits only in the center 12 dB of the range of adjustment.

5B-15. RELATIVE AMPLITUDE OPERATIONS

5B-16. Introduction

5B-17. Relative amplitude operations allow the operator to define a reference amplitude and select (and exercise) another amplitude relative to the defined reference. The actual amplitude of the RF output signal is a combination of the reference and the relative amplitudes. Amplitude can be entered in either volts or dBm, and, in relative amplitude operation, non-linear amplitudes can be entered as dB or as dBm[dB(m)]. So, relative amplitude operations can be in terms of volts or dB(m) relative to a reference which can also be volts or dB(m). While this flexibility in units allows for many possible combinations, the instrument only uses four relative amplitude operations:

1. Volts Relative to a Reference in Volts Operation

2. dB Relative to a Reference in Volts Operation

3. dBm Relative to a Reference in dB Operation

4. Volts Relative to a Reference in dB Operation

5B-18. All four relative amplitude operations follow the same general sequence:

1. The reference amplitude to be stored is either entered or manually adjusted into the AMPLITUDE Display.

2. The REL AMPL control is pressed to enter relative amplitude operation. The AMPLITUDE Display goes to zero and the REL AMPL control is lit.

3. The relative amplitude is programmed or manually adjusted into the AMPLITUDE Display. Press and hold the AMPL FUNCTION control to display the actual amplitude of the RF output signal.

4. The REL AMPL control is pressed again to exit relative amplitude operation. The actual amplitude of the RF signal (step #3) appears in the AMPLITUDE Display and the REL AMPL control is dark.

5B-19. Volts Relative to a Reference in Volts Operation

5B-20. In Volts Relative to a Reference in Volts Operation, the level is selected in terms of volts relative to a defined reference amplitude. The actual amplitude of the RF output signal is the sum of the reference amplitude plus the relative amplitude. As Figure 5B-1 shows, the two amplitudes are added algebraically. This is the only relative amplitude operation for which this is true.

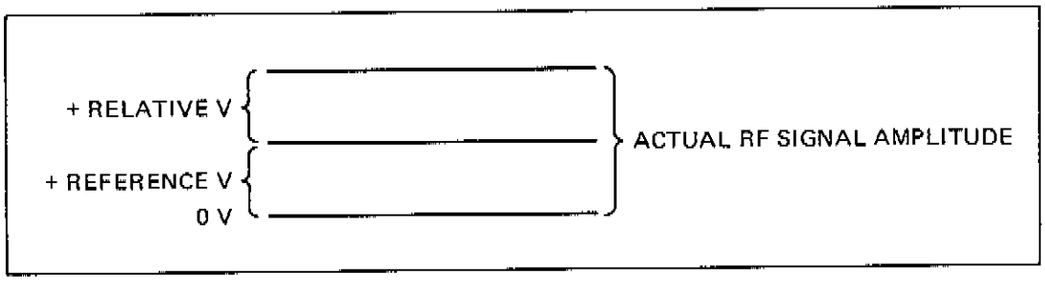

Figure 5B-1. Volts Relative to a Reference in Volts Operation

EXAMPLE: Program a reference amplitude of 1V and a relative amplitude of -300 mV. Display the amplitude of the actual RF output signal.

CONTROL SEQUENCE	COMMENTS
FUNCTION AMPL **DATA** 1 **UNITS** MHz/V	AMPLITUDE Display is 1V.
REL AMPL	The instrument enters relative amplitude operation: The REL AMPL control is lit. AMPLITUDE Display is 0. 1V is the stored amplitude.
FUNCTION AMPL **DATA** +/- 3 0 0 **UNITS** kHz/mV	AMPLITUDE Display is -300 mV, the relative amplitude.
Press and hold **FUNCTION** AMPL	AMPLITUDE Display is 700 mV, the amplitude of the actual RF output signal [1V + (-300 mV)].
Release **FUNCTION** AMPL	AMPLITUDE Display is -300 mV, the relative amplitude.

CONTROL SEQUENCE	COMMENTS
REL AMPL	The instrument exits relative amplitude operation. The REL AMPL control is dark. The AMPLITUDE Display is 700 mV, the last amplitude programmed (actual RF output).

5B-21. dB Relative to a Reference in Volts Operation

5B-22. In dB Relative to a Reference in Volts Operation, the level is entered in terms of dB relative to a reference voltage (the RF output level can be set to some dB level above or below the reference voltage).

EXAMPLE: Program a reference voltage of 500 mV. Select +6 dB relative to this reference level and look at the actual amplitude of the RF output signal. Select -6 dB relative to the reference and look at the actual amplitude of the RF output.

CONTROL SEQUENCE	COMMENTS
FUNCTION AMPL; DATA 5 0 0; UNITS kHz/mV	AMPLITUDE Display is 500 mV.
REL AMPL	The instrument enters relative amplitude operation: The REL AMPL control is lit. The AMPLITUDE Display is 0. 500 mV is stored as the reference.
FUNCTION AMPL; DATA 6; UNITS Rad/dB(m)	AMPLITUDE Display is 6 dB, the programmed relative amplitude. The instrument converts this to the equivalent voltage ratio of 1.99526.
Press and hold FUNCTION AMPL	The AMPLITUDE Display is 998 mV which is the actual amplitude of the RF output signal (500 mV X 1.99526).
Release FUNCTION AMPL	AMPLITUDE Display is 6 dB.
FUNCTION AMPL; DATA +/- 6; UNITS Rad/dB(m)	AMPLITUDE Display is -6 dB, the programmed relative amplitude. The instrument converts this to the equivalent voltage ratio of 0.50119.
Press and hold FUNCTION AMPL	The AMPLITUDE Display is 251 mV which is the actual amplitude of the RF signal (500mV X 0.50119).

CONTROL SEQUENCE	COMMENTS
Release **FUNCTION** **AMPL**	AMPLITUDE Display is -6 dB.
REL AMPL	The instrument exits relative amplitude operation: The REL AMPL control is dark. AMPLITUDE Display is 251 mV, the last programmed RF output amplitude.

5B-23. Volts Relative to a Reference in dB Operation

5B-24. In Volts Relative to a Reference in dB Operation, the actual level of the RF output signal is the displayed amplitude modified by the defined dB reference (the dB reference functions like a scale factor). For example, if the reference amplitude is defined to be -20 dB, then the actual level of the RF output signal is 20 dB below the displayed amplitude. This type of relative amplitude operation can be used to compensate for cascaded gain or loss after the RF OUTPUT connector so that the level displayed on the instrument is the same as the level being input to other devices (Figure 5B-2). Since the only difference between this type of relative amplitude operation and dBm Relative to a Reference in dB Operation is the units of the displayed amplitude, press the AMPL FUNCTION control and then press the appropriate UNITS control to shift between the two types of relative amplitude operation. The actual amplitude of the RF output signal will not be affected by this shift.

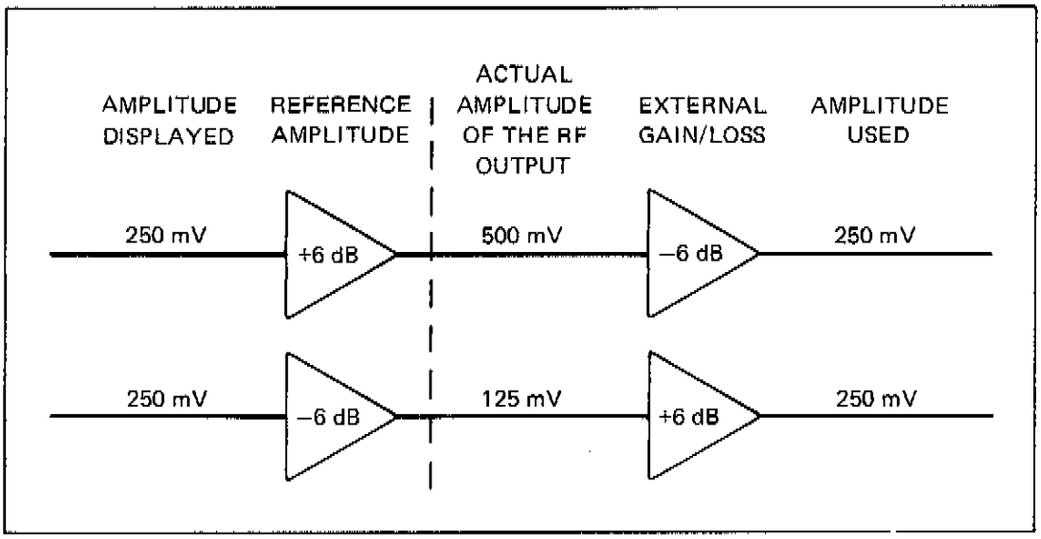

Figure 5B-2. Volts Relative to a Reference in dB Operation

EXAMPLE: Program a reference amplitude of +6 dB(m). Enter relative amplitude operation. Program an amplitude of 250 mV and look at the actual amplitude of the RF output signal.

CONTROL SEQUENCE	COMMENTS
FUNCTION AMPL **DATA** 6 **UNITS** Rad/dB(m)	AMPLITUDE Display is 6 dBm.
REL AMPL	The instrument enters relative amplitude operation: The REL AMPL control is lit. AMPLITUDE Display is 0. +6 dBm is stored.
FUNCTION AMPL **DATA** 2 5 0 **UNITS** kHz/mV	AMPLITUDE Display is 250 mV.
Press and hold **FUNCTION** AMPL	AMPLITUDE Display is 499 mV which is the correct value to obtain 250 mV following a 6 dB attenuator.
Release **FUNCTION** AMPL	
REL AMPL	The instrument exits relative amplitude operation: REL AMPL control is dark. AMPLITUDE Display is 499 mV, the last amplitude programmed.

5B-25. dBm Relative to a Reference in dB Operation

5B-26. In dBm Relative to a Reference in dB Operation, the actual amplitude of the RF output is the algebraic sum of the stored amplitude in dB(m) and the displayed amplitude in dB(m). This can be thought of as a programmed dB relative to an absolute reference in dBm or as a programmed absolute level in dBm modified by a dB reference scale factor. For this reason, the dBm annunciator is lit for both quantities. The actual amplitude of the RF output is expressed in dB(m). Since the only difference between this type of relative amplitude operation and Volts Relative to a Reference in dB Operation is the units of the displayed amplitude, press the AMPL FUNCTION control and then press the appropriate UNITS control to shift between the two types of relative amplitude operation. The actual amplitude of the RF output will not be affected by the shift.

EXAMPLE: Program a reference amplitude of +6 dBm. Program a relative amplitude of +3 dB(m) and look at the actual amplitude of the RF output signal.

CONTROL SEQUENCE	COMMENTS
FUNCTION AMPL **DATA** 6 **UNITS** Rad/dB(m)	The amplitude Display is 6 dBm.

CONTROL SEQUENCE	COMMENTS
REL AMPL	The instrument enters relative amplitude operation:
	The REL AMPL control is lit. The AMPLITUDE Display is 0. +6 dBm is stored.
FUNCTION AMPL **DATA** 3 **UNITS** Rad/dB(m)	AMPLITUDE Display is +3 dBm, the relative amplitude.
Press and hold **FUNCTION** AMPL	The AMPLITUDE Display is 9 dBm (6 dBm +3 dBm), the actual amplitude of the RF output signal.
Release **FUNCTION** AMPL	
REL AMPL	The instrument exits relative amplitude operation:
	REL AMPL control is dark. AMPLITUDE Display is 9 dBM, the last amplitude programmed.

5B-27. FIXED RANGE OPERATION

5B-28. Fixed range operation allows the operator to adjust amplitude beyond the normal autorange boundaries (defined in Table 5B-1) using the Edit Knob. When fixed range operation is selected (special function 31), the step attenuator is held at its current range to avoid the switching transients described in the Amplitude Switching Characteristics at the beginning of this section. The specified level range available during fixed range operation depends upon whether or not AM is enabled and whether the RF output frequency is below 520 MHz or at 520 MHz and above (defined in Table 5B-1). Fixed range operation also affects frequency and modulation operations. The effects of fixed range operation on frequency and modulation are described in Sections 5A and 5C, respectively.

Section 5C
Modulation Operations

5C-1. INTRODUCTION

5C-2. The information in this section describes the following types of modulation operations: Modulation Frequency Operations, Amplitude Modulation Operations, Angle Modulation Modes, and Angle Modulation Operations. The instrument can amplitude and angle modulate the RF output at the same time. The modulation signals for both AM and angle modulation can be from an internal source or one signal can be from the internal source, and the other signal can be from an external source. (There is only one input circuit.) Neither internal or external modulation is enabled unless the appropriate MODULATION control is turned on (lit).

5C-3. The external modulation signal may be applied to either one of two MOD IN connectors. One MOD IN connector is located on the front panel in the MODULATION section, and the other connector is located at the left side of the rear panel. The two connectors are electrically in parallel. The DC COUPLING control determines whether the modulation signal is ac coupled or dc coupled. If the control is lit, the MOD IN signal is dc coupled. If the control is dark, the MOD IN signal is ac coupled.

5C-4. The internal modulating signal is present at the MOD OUT connector either when special function 71 is selected or when the INT AM or the INT FM/ØM control is lit. The amplitude of this signal can be varied from 0 to 2.0V peak-to-peak into 600 Ohms using the MOD OUT control.

5C-5. MODULATION FREQUENCY OPERATIONS

5C-6. Introduction

5C-7. The modulation source can either be the low-distortion internal oscillator or an external signal applied to either MOD IN connector. The level and frequency of external sources are not under the control of the instrument. So, the UNCAL annunciator feature will not function for external inputs because the instrument has no way of knowing the value of the external input. The remainder of this modulation frequency operation information applies to modulation frequency selected from the internal source.

5C-8. Modulation frequency is specified and can be internally selected from 20 Hz to 199 kHz. Internal modulation frequency can also be selected from 1 Hz to 19 Hz and 200 kHz to 255 kHz, but is not specified (the UNCAL and MOD annunciators light). The instrument programs the modulation frequency in one of four ranges of resolution: 1 Hz, 10 Hz, 100 Hz, and 1 kHz. The resolution range changes are at 200 Hz, 2 kHz, and 20 kHz, respectively. This internal modulation signal is present at the MOD OUT connector when either special function 71 is selected or when either the INT AM or INT FM/ØM control is lit. If special function 71 is used to turn the internal modulation signal on, special function 70 must be selected to turn it off.

5C-9. The phase modulation and FM bandwiths are 12 and 250 kHz, respectively. (The MOD and UNCAL annunciators are lit at and above these frequencies). The AM bandwidth is 8 kHz for frequencies below 5 MHz, and the AM bandwidth is 50 kHz for RF output frequencies of 5 MHz and above. (The MOD and UNCAL annunciators will be lit at and above these frequencies.)

5C-10. Modulation frequency, like the RF output frequency, interacts with the FM deviation limits. When these limits are exceeded, the UNCAL and MOD annunciators light to indicate that the output is not guaranteed. This interaction is discussed in more detail in the angle modulation material later in this section.

5C-11. Modulation Frequency Keyboard Operation

5C-12. Modulation frequency is entered using a FUNCTION/DATA/UNITS control sequence. Press the MOD FREQ control. Use the DATA controls to enter the numerical value of the modulation frequency. Press the appropriate UNITS control (V/MHz, mV/kHz, or uV/Hz) to end the entry. If you notice a mistake in your entry before you press the UNITS control, press the CLEAR control to clear the entry. The instrument ignores both the Rad/dB(m) and the % UNITS control.

5C-13. Modulation Frequency Edit Operation

5C-14. The Edit Knob controls can be used to adjust the modulation frequency. Press MOD FREQ to get the modulation frequency in the MODULATION Display. Press the MOD EDIT control to place the Bright Digit in the MODULATION Display. Use the DIGIT controls to move the Bright Digit to any decimal position in the MODULATION Display. Rotate the Edit Knob until the desired modulation frequency is displayed.

5C-15. AMPLITUDE MODULATION OPERATIONS

5C-16. Introduction

5C-17. AM operations allow the operator to enter an AM depth and to enable or disable external or internal AM. Modulation frequency affects internal modulation, so the modulation frequency may have to be entered.

5C-18. AM index (depth) can be entered using a FUNCTION/DATA/UNITS control sequence or adjusted using the Edit Knob controls. AM indexes up to 99.9% can be selected with a resolution of 0.1%. The AM depth accuracy is specified up to 90% for RF output frequencies below 520 MHz and up to 70% for RF output frequencies of 520 MHz and above. The MOD and the UNCAL annunciators light when AM depth is outside specified limits.

5C-19. The combination of the AM depth and RF amplitude is limited to an envelope peak which is within the capability of the output amplifier. The AMPL and the UNCAL annunciators light when the envelope peak of AM depth and RF amplitude is greater than +19 dBm (2V) peak for RF outputfrequencies below 520 MHz and +13 dBm (1V) peak for RF output frequencies at 520 MHz and above.

5C-20. AM Percentage Keyboard Operation

5C-21. AM depth (in %) is entered using a FUNCTION/DATA/UNITS control sequence. Press the AM FUNCTION control. Use the DATA controls to enter the numerical value of AM percentage. Press the % UNITS control to end the entry. If a mistake in the entry is noticed before % UNITS is pressed, press CLEAR to clear the entry. The instrument ignores all UNITS controls except % and CLEAR. Programming AM depth doesn't enable internal or external AM. If the INT AM control is lit, the instrument will be modulated at the frequency of the internal modulation oscillator and at the AM depth entered. If the EXT AM control is lit, the entered AM depth will be produced accurately only for an external modulation signal amplitude of 1V peak.

5C-22. AM Percentage Edit Operation

5C-23. The Edit Knob controls can be used to adjust the AM percentage. Press AM FUNCTION to make AM appear in the MODULATION Display. Press the MOD EDIT control to move the Bright Digit to the MODULATION Display. Use the DIGIT controls to position the Bright Digit at the decimal location desired. Rotate the Edit Knob until the desired AM appears in the MODULATION Display.

5C-24. Enable AM Operation

5C-25. Press the INT AM control so that it is lit to enable internal AM. Press the EXT AM control so that it is lit to enable external AM. These two controls are interlocked so that only one can be lit at a time. The EXT AM control is also interlocked with the EXT FM/ØM control so that only one of these two controls is lit at a time. Both interlocks enable the last control pressed. When INT AM is lit, the frequency of the internal modulation source is available at the MOD OUT connector.

5C-26. LIMITED PULSE MODULATION

5C-27. Limited pulse modulation is possible using the dc coupled external AM input. The instrument was not designed specifically for pulse modulation, so the specifications do not support pulse modulation. To use limited pulse modulation, press the EXT AM and DC COUPLED controls so that they are lit. Apply the pulse signal to either MOD IN connector. The pulse signal should switch between +1V and −1V to achieve an ON/OFF ratiowithin the range implied by the depth accuracy specification. The pulsed envelope will have a rise time on the order of that implied by the AM bandwidth.

5C-28. ANGLE MODULATION MODES

5C-29. Introduction

5C-30. The 6070A and the 6071A provide a wide variety of FM and ØM (angle) modulation capabilities from either the internal modulation source or an external source. The two angle modulation modes, HI DEV (high deviation) and DCFM increase the angle modulation capabilities of the instrument. The HI DEV Mode provides large deviation FM or ØM while maintaining good noise performance and the DCFM Mode allows low-rate, high-deviation FM.

5C-31. HI DEV Mode Operation

5C-32. If large deviations (greater than 200 kHz or 20 Radians referred to the fundamental band) are programmed, the HI DEV Mode is automatically enabled. The instrument can also be forced into the HI DEV Mode by selecting special function 21. (If special function 21 is used to force HI DEV Mode operation, the instrument will remain in HI DEV Mode operation until special function 20 is selected.) The HI DEV MODE annunciator is lit during HI DEV Mode operation. In addition to allowing high deviations, the HI DEV Mode also offers improved FM accuracy and eliminates one source of RF frequency programming transients (the discriminator circuit is not used), but at the expense of spectral noise.

5C-33. DCFM Mode Operation

5C-34. During DCFM Mode operation, the RF output is not synthesized so that the RF output frequency can be deviated in proportion to an external modulation signal. DCFM Mode operation is useful for both internal and external FM operations that require high deviations below a rate of a few kHz. (ACFM performance is restricted in this area.) The DCFM Mode is automatically enabled (DCFM MODE indicator lights) when both the EXT FM/ØM and the DC COUPLED controls are lit. The instrument can be forced into the DCFM Mode by selecting special function 11. (If special function 11 is used to force the instrument into DCFM Mode operation, the instrument will remain in DCFM Mode operation until special function 10 is selected.)

5C-35. Angle Modulation Operations

5C-36. INTRODUCTION

5C-37. The 6070A and the 6071A provide both phase and frequency modulation (ØM and FM) with the modulation source being either the internal modulation oscillator or an external signal applied to the MOD IN connector. Since the specified and allowed deviation depends upon the RF output frequency, the modulation frequency, and Mode, a status annuciator system is provided to alert the operator to abnormal operation. (The UNCAL annunciator turns on.) These status checks assume an external modulation signal amplitude of 1V peak. This status system cannot warn the operator about any modulation frequency dependent limitations when an external modulation source is used.

5C-38. Angle modulation is programmed in series with the RF output frequency. This means that each time the deviation is changed, the RF output frequency is reprogrammed first. But, each time the RF output frequency is changed, the deviation will be reprogrammed only if angle modulation is enabled. Table 5C-1 shows the maximum deviation that can be programmed for each RF output frequency band. There is an interaction between the RF output frequency, the modulation frequency, and the deviation. If the interaction is violated, the deviation is sacrificed tomaintain the integrity of both the RF output frequency and the modulation frequency. Refer to Table 5C-1. Suppose that the RF output frequency is 260 MHz and the deviation is 999 kHz DEV. If the RF output frequency is changed to 240 MHz, that deviation cannot be produced. So, the instrument flashes the UNCAL and MOD annunciators to let the operator know that the actual instrument deviation does not agree with the displayed deviation and programs the deviation to 499, the maximum value in the 240 MHz frequency band. If the operator does not reprogram the deviation when the RF output frequency is changed to 250 MHz or above, the instrument reprograms the deviation back to 999 and turns off the MOD and UNCAL annunciators.

Table 5C-1. Maximum Angle Modulation Index

RF OUTPUT BAND (MHz)	MAXIMUM FM PEAK DEVIATION*		MAXIMUM ØM INDEX (Rad)
	ACFM THE LESSER OF	DCFM THE LESSER OF	
0.2 to 62.5	999 kHz or fm(520-fo)	499 kHz	99.9
62.5 to 125	199 kHz or fmfo	fo or 99.9 khz	19.9
125 to 250	499 kHz or fmfo	fo or 199 kHz	49.9
250 to 1040	999 kHz or fmfo	fo or 499 kHz	99.9

*Also, at low RF output frequencyies, the maximum deviation is 1000(fo-0.2)-fm. Minimum deviation is 10% of range except for the 2, 20, and 200 kHz ranges where deviation is 12.5%.

where: fo = the numerical value of the RF output frequency in MHz
fm = the numerical value of the modulation frequency expressed in Hz

5C-39. When an angle index is programmed, one of nine internal ranges is automatically selected. Table 5C-2 lists these ranges for FM and Table 5C-3 lists these ranges for ØM. These tables also list the maximum specified deviation for each RF band. The minimum specified deviation is 10% of range except for the 2, 20, and 200 ranges where it is 12.5% of range.

Table 5C-2. FM Deviation Ranges (kHz DEV)

RF OUTPUT FREQUENCY BAND (MHz)	HI DEV OFF MODE	HI DEV ON MODE
0.2 to 62.5	10, 20, 50, 100, and 200	50, 100, 200, 500, and 1000
62.5 to 125	2, 5, 10, 20, and 50	10, 20, 50, 100, and 200
125 to 250	5, 10, 20, 50, and 100	20, 50, 100, 200, and 500
250 to 520	10, 20, 50, 100, and 200	50, 100, 200, 500, and 1000
520 to 1040	20, 50, 100, 200, and 500	100, 200, 500, and 1000

Table 5C-3. Phase Modulation Deviation Ranges (Rad)

RF OUTPUT FREQUENCY BAND (MHz)	HI DEV OFF MODE	HI DEV ON MODE
0.2 to 62.5	1, 2, 5, 10, and 20	5, 10, 20, 50, and 100
62.5 to 125	0.2, 0.5, 1, 2, and 5	1, 2, 5, 10, and 20
125 to 250	0.5, 1, 2, 5, and 10	2, 5, 10, 20, and 50
250 to 520	1, 2, 5, 10, and 20	5, 10, 20, 50, and 100
520 to 1040	2, 5, 10, 20, and 50	10, 20, 50, and 100

5C-40. The angle modulation index for FM is expressed in kHz DEV (deviation in kHz) and in Rad (radians) for phase modulation. The instrument converts between the two unit systems if the appropriate UNITS control is pressed and if the EXT FM/ØM control is dark. If the deviation is 99.9 Rad or less and if internal modulation is enabled, the conversion relationship is: kHz DEV = Rad (modulation frequency expressed in kHz). Phase modulation is internally normalized to 10 kHz as if it were FM. This means that the ØM index is multiplied by 10 kHz (regardless of the current value of modulation frequency), and the result is programmed as FM deviation. The amount of peak deviation allowed depends upon the center frequency range and whether or not the center frequency is unlocked (DCFM) as listed in Table 5C-5.

5C-41. The operations for both types of angle modulation are similar, so operation will be discussed simultaneaously for both types of angle modulation. Any differences in operation between the two is pointed out. There are three basic types of angle modulation operations: Angle Modulation Deviation Keyboard Operations, Angle Modulation Deviation Edit Operations, and Angle Modulation Enable Operations.

5C-42. ANGLE MODULATION DEVIATION KEYBOARD OPERATIONS

5C-43. Both FM deviation and phase modulation deviation are programmed using a FUNCTION/DATA/UNITS control sequence. Press the FM/ØM FUNCTION controls. Use the DATA controls to enter the value of modulation. Use the UNITS controls to select the appropriate units and to select either FM or ØM. Press Rad/dB(m) to select ØM in radians. Press one of the frequency UNITS controls to select FM. If a mistake in entry is made, press the CLEAR control. The instrument ignores the % control. The instrument will not angle modulate the RF output signal until either the INT FM/ØM or the EXT FM/ØM control is on (lit).

5C-44. ANGLE MODULATION DEVIATION EDIT OPERATIONS

5C-45. The EDIT controls can be used to manually adjust the angle modulation deviation. Use the FM/ØM FUNCTION and UNITS controls to get the type of deviation

(FM or ØM) into the MODULATION Display. Press the MOD EDIT control to place the Bright Digit in the MODULATION Display. Use the DIGIT controls to move the Bright Digit to any decimal position in the MODULATION Display. Rotate the Edit Knob until the desired deviation appears in the MODULATION Display.

5C-46. ANGLE MODULATION ENABLE OPERATIONS

5C-47. Press either the INT FM/ØM or the EXT FM/ØM control to enable angle modulation. The two controls are interlocked so that only the last control pressed is enabled (lit). The EXT AM and the EXT FM/ØM controls are also interlocked so that only the last control pressed is enabled (lit). When the INT FM/ØM control is lit, the frequency of the internal source is available at the MOD OUT connector.

5C-48. FIXED RANGE OPERATION

5C-49. When angle modulation is programmed, the instrument automatically selects the appropriate deviation range for the best resolution. This may cause switching transients, and the transients can be objectionable for some applications. Fixed range operation allows the operator to hold the present range while varying the modulation index by using the Edit Knob. Select special function 31 to enter fixed range operation and special function 30 to exit fixed range operation. Fixed range operation also affects frequency and amplitiude. See Sections 5A and 5B, respectively, for information about the effects of fixed range operation on frequency and amplitude.

Section 5D
Memory Operations

5D-1. INTRODUCTION

5D-2. The information in this section describes the memory operations. Memory operations are used to build and recall a stack of front panel setups. These setups include all front panel settings except the status of the SWEEP features and the status of the RF OUTPUT ON, MOD OUT, and POWER controls. (The MOD OUT control sets the level of the MOD OUT signal; the frequency of the MOD OUT signal is stored with the rest of the front panel setup.) The standard instrument can store up to nine front panel setups (memory locations 01 through 09) in a volatile memory. The contents of these locations are lost when the instrument is placed in standby or turned off. Instruments with the 607XA-570 Nonvolatile Memory Option installed can store up to 50 front panel setups (memory locations 01 through 50). The contents of these locations will be preserved for about four years after the instrument is placed in standby or turned off.

5D-3. The front panel setups can either be stored and recalled randomly or they can be stored in a definite sequence for test procedures. Since the INSERT and DELETE controls do not affect memory locations above TOP (memory location numbers numerically larger than TOP), it is advisable to store sequential front panel setups in memory locations TOP and below and use memory locations above TOP for random access.

5D-4. There are four additional special function memory locations: 00, 96, 98, and 99. When the contents of a memory location (including the front panel image in location 99) will be destroyed by a memory operation, the contents are first stored in memory location 00 to provide a level of protection during memory operations. The front panel setup for the power-on sequence is stored in memory location 98. Standard instruments recall the contents of memory location 98 each time the POWER control is set to the ON position or when special function 01 is selected. Memory location 99 is the digital image of the front panel. Each time there is a change to the front panel, memory location 99 reflects that change. Instruments with the 607XA-570 Nonvolatile Memory Option installed recall memory location 99 when the POWER control is set to the ON position and recall memory location 98 when special function 01 is selected. RECALL 96 places the instrument in a special diagnostic mode. This diagnostic mode is described in the 6070A/6071A Calibration Manual.

5D-5. CREATING A LISTING OF FRONT PANEL SETUPS

5D-6. Four controls are used to create the front panel listing stored in memory: STORE, DELETE, TOP, and INSERT. Only the TOP and STORE controls function for memory locations above TOP.

1. Press STORE followed by a valid memory location entry to store the current front panel setup at the location entered.

2. Press DELETE followed by a valid memory location entry to delete the contents of the memory location entered. When the contents of the location are deleted, the contents of all memory locations above the one deleted, up to and including TOP, are moved down one location number. (The new TOP memory location = the old TOP memory location -1.) Memory locations above TOP are unaffected.

3. Press TOP followed by a valid memory location entry to define the entered memory location as TOP.

4. Press INSERT followed by a valid memory location entry to insert the current front panel setup into the next memory location above the location entered. The contents of all memory locations above the entered location up to TOP are moved up one memory location. TOP is written over by the contents of the memory location immediately below TOP. All memory locations above TOP are unaffected.

5D-7. RECALLING A FRONT PANEL SETUP

5D-8. Once the listing of front panel setups has been created, the front panel setups can be recalled by pressing RECALL followed by a valid memory location entery. The front panel setup that is replaced by the recalled front panel setup is stored in memory location 00.

5D-9. VALID MEMORY LOCATION ENTRIES

5D-10. There are four types of valid memory location entries: TOP, NEXT↑, NEXT↓, and a two-digit entry.

1. TOP designates the memory location previously defined as TOP.

2. NEXT↑ designates the memory location immediately above the last memory location entered.

3. NEXT↓ designates the memory location immediately below the last memory location entered.

4. The two-digit entry designates the memory location by number. Two digits must be used. For example, to designate memory location number 1, it is necessary to press both the 0 and then the 1 DATA controls.

Section 5E
Miscellaneous Operations

5E-1. INTRODUCTION

5E-2. The information in this section describes several small but important areas of operation: RF Output Operation, Power Operation, Special Function Operation, INTERROGATE Operation, and BUS STATUS Operation.

5E-3. RF OUTPUT OPERATION

5E-4. The RF OUTPUT ON control connects the RF output signal to the RF OUTPUT connector or removes the RF output signal from the RF OUTPUT connector. If the RF OUTPUT ON control is lit, the RF output signal will be available at the front panel RF OUTPUT connector or, if the 607XA-830 Rear Panel Output Option is installed, the RF output signal is available at the rear panel RF OUT connector. If RF OUTPUT ON control is dark, the RF output is not present. The UNCAL annunciator flashes when the RF OUTPUT ON control is dark to indicate that the signal at the RF OUTPUT connector is not the same as the displayed level. Press the RF OUTPUT control to change its status. If the 607XA-870 Reverse Power Protection Option is installed, the RF OUTPUT ON control flashes to indicate a tripped condition. Press the RF OUTPUT ON control to reset the tripped condition. See Section 7D for more information about the Reverse Power Protection Option. Memory operations do not affect the state of the RF OUTPUT ON control.

5E-5. POWER OPERATION

5E-6. Introduction

5E-7. As Figure 5E-1 shows, power operations involve two controls: the POWER control and the MAIN POWER switch. There are two types of power operations: Power On and Standby to Operate.

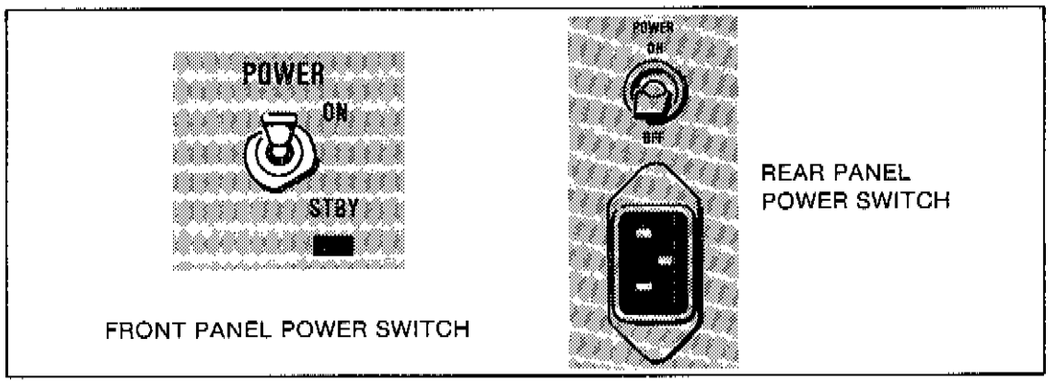

Figure 5E-1. POWER Operation

5E-8. Power On

5E-9. Use the following procedure to apply line power to the instrument. This procedure assumes that the appropriate line power is properly connected to the line power receptacle located immediately below the MAIN POWER Switch. This procedure ends with the instrument in the standby condition.

CAUTION

If the STBY power indicator does not light within one minute after the main power switch is set to the on position, set the main power switch to the off position. Troubleshooting and repair are indicated.

1. Set the MAIN POWER switch to the ON (up) position.

2. Observe that the STBY POWER indicator (located on the front panel) lights after a short time delay. If the STBY POWER indicator does not light within 1 minute after the MAIN POWER switch is set to ON, this is an indication of a problem. Set the MAIN POWER switch back to the OFF position. Troubleshooting and repair are indicated.

3. When the STBY indicator lights, the instrument is in the standby condition.

5E-10. Standby to Operate

5E-11. Set the POWER control to the ON position to shift from standby to operate. When the instrument is shifted to operate, it automatically sequences through a series of self-tests and displays. This procedure describes that series of self-tests and displays. This automatic sequence can be bypassed by pressing any FUNCTION control. Instruments equipped with the 607XA-570 Nonvolatile Memory Option will set up the front panel to the last front panel setup before power was removed rather than the power-on sequence front panel setup.

5E-12. The STBY POWER indicator should be on. Set the POWER control to the ON position. The following occurs in the sequence presented:

1. The instrument starts the self-tests and turns on all lighted controls, annunciators, indicators, and every segment of each display for 5 seconds.

2. After 5 seconds, the front panel is set up to the standard power on setup listed below unless one or more self-tests failed. If the instrument has the 6070XA-570 Nonvolatile Memory Option installed, the front panel is returned to the last setup before the instrument was placed in standby.

a.	RF OUPUT Control	On
b.	FREQUENCY Display	250 000 000
	Bright Digit Location	1 MHz Position
	Bright Digit is On	
c.	REL FREQ	Off
d.	AMPLITUDE Display	-60.0 dBm
	Bright Digit Location	1 dB Position
e.	REL AMPL	Off
f.	Internal Amplitude Correction	Enabled
g.	MODULATION Controls	All OFF
h.	MODULATION Display	1.0 kHz
	Bright Digit Location	1.0 kHz Position

i. Programmed Parameters:

Frequency Step (FREQ STEP)	25.000 kHz
AM Index (depth)	30.0%
FM Index (deviation)	5.0 kHz DEV
Top Memory Location (TOP)	9*
Sweep Increment (SWP INCR)	1 MHz
Sweep Width (SWP WDTH)	100 MHz
Sweep Speed	Normal

j. SWEEP Off

k. IEEE-488 Interface Status:

LOCAL BUS STATUS	Dark (LOCAL)
	Deffered Mode (@0)
	RQS Mask is 11000000*
	Status Byte is Cleared
	Trigger Configuration is Null

*If the 607XA-570 Nonvolatile Storage Option is installed, the front panel setup and the RQS mask will be the same as when the instrument was placed in standby.

3. If the instrument fails one of the self-tests, the instrument model number (6070 or 6071) appears in the FREQUENCY Display and an error code indicating the test(s) failed appears in the AMPLITUDE Display. The display remains in this state until a FUNCTION control is pressed, but the remainder of the front panel is set up as described in step 2. The self-test error code can be interpreted using Table 5E-1.

Table 5E-1. Self-Test Error Code Interpretation

The self-test error codes are additive. For example, if the instrument failed the ROM Test, the Scratch Pad Memory RAM Test, and the Angle Modulation Test, the AMPLITUDE Display would be 0205:

ROM Test Failed =	0 0 0 1
Scratch Pad Memory RAM Test Failed =	0 0 0 4
Angle Modulation Test Failed =	0 2 0 0
TOTAL =	0 2 0 5

SELF-TEST ERROR CODES (AMPLITUDE DISPLAY)	INTERPRETATION
blank	All tests passed.
0 0 0 1	ROM test failed.
0 0 0 2	Calibration PROM test failed.
0 0 0 4	Scratch Pad Memory RAM test failed.
0 0 1 0	Non-volatile Memory Test failed.
0 0 2 0	Mod/Divider Test failed.
0 0 4 0	Delay Discriminator not Ready Test failed.
0 1 0 0	Amplitude Modulation Test failed.
0 2 0 0	Angle Modulation Test failed.
0 4 0 0	Cable Continuity Test Error (Sub-synthesizer, Mod distribution, N/1).
1 0 0 0	Frequency Doubler Test Failure.
2 0 0 0	Power on template recall failure.
4 0 0 0	Sub-synthesizer Test Failure.
1 0 0 0 0	IEEE Interface Test Failure.
(-)xxxxx	Self test was aborted with partial result xxxxx.

5E-13. SPECIAL FUNCTION OPERATION

5E-14. As Figure 5E-2 shows, the instrument uses 28 of the possible 100 special functions. To select any special function, press the SHIFT FUNCTION control so that it is lit, then press the two DATA controls for the desired special function. (Two DATA controls must be pressed; for example, to select special function 01, both the 0 and the 1 DATA controls must be pressed.)

5E-15. The use of all of the special functions except 04 is apparent from the descriptions presented in Figure 5E-2. Special function 04, the Front Panel Control Check, displays a coded number in the 10 kHz and 100 kHz positions of the FREQUENCY Display for each control except the POWER control and the CLEAR units control. The POWER control retains its normal fucntion and the CLEAR UNITS control exits the Front Panel Control Check. Table 5E-2 lists the two-digit code that should appear while each control is pressed.

5E-16. INTERROGATE OPERATION

5E-17. Introduction

5E-18. The are two INTERROGATE operations: Displaying Rejected Entry Error Codes and Displaying Uncalibrated Error Codes. Both operations are accomplished by pressing and holding the INTERROGATE control.

5E-19. Displaying Rejected Entry Error Codes

5E-20. When the operator makes an illegal entry (for example, when attempting to program a frequency of 3000 MHz), the instrument ignores the entry and the REJ ENT annunciator flashes to indicate that a rejected entry condition exists. The value of the quantity rejected flashes unless the quantity overflows the display in which case 1999 999 999 is displayed.

5E-21. To determine the exact error, press and hold the INTERROGATE control. The error(s) appears in the appropriate display as the sum of individual octal codes that represent each error. Figure 5E-3 provides interpretation of the error codes. To clear the rejected entry, either program a valid entry for the rejected parameter or press the CLEAR UNITS control. When REJ ENT flashes, the UNCAL annunciator is disabled. Once the rejected entry condition is cleared, an uncalibrated condition may be indicated.

5E-22. Displaying Uncalibrated Error Codes

5E-23. There are two uncalibrated conditions. Both conditions indicate that the output of the instrument is outside the specified limits, but the output is usable in one uncalibrated condition and unusable in the other condition. The UNCAL annunciator turns on steadily to indicate that the output is still usable. The MOD, FREQ, or AMPL annunciator and the appropriate display also turn on to indicate the problem area. The UNCAL annunciator flashes to indicate that the output is unusable. The MOD, FREQ, or AMPL annunciator also flash to indicate the problem area. The UNCAL annunciator is disabled when REJ ENT is flashing. The rejected entry condition must be cleared before either uncalibrated condition can be indicated and the uncalibrated error codes displayed.

5E-24. To determine the exact error, press and hold the INTERROGATE control. The error(s) appear in the appropriate display as the sum of octal codes representing each error. Figure 5E-4 provides interpretation of the error codes. To clear either uncalibrated condition, program the output so that it is within the calibrated limits.

5E-25. BUS STATUS OPERATIONS

5E-26. Introduction

5E-27. There are two BUS STATUS operations: Return To Local and Bus Address Display.

5E-28. Return to Local

5E-29. Press the BUS STATUS control to return the instrument to local control via the front panel. The status of the instrument is shown by the REM indicator. If REM is off, the instrument is under local control. If REM is on, the instrument is under remote control. The IEEE-488 bus can return the instrument back to remote control (see Section 6).

5E-30. Bus Address Display

5E-31. Press the SHIFT FUNCTION control to enable the BUS ADRS function of the BUS STATUS control. With the BUS ADRS function enabled, press the BUS ADRS control to display the bus address of the instrument. The bus address appears in decimal in the FREQUENCY Display.

FUNCTION
SHIFT
DATA
X Y

X	COMMENTS	Y: 0	1	2	3
0		Clear all special functions.	Display special function status in binary (except OY).	Power on Sequence	LED and Display Test
1	Forced DCFM	Disable (Note 2)	Enable (Note 3)		
2	Forced High Deviation	Disable (Note 4)	Enable (Note 5)		
3	Fixed Range	Disable (Note 6)	Enable (Note 7)		
4	Sweep Speed in ms/Step (Note 8)	0	50	100	200
5	Sweep Symmetry	Symmetrical	Asymmetrical		
6	Wideband Reference	Disable	Enable		
7	Internal Audio	Disable (Note 9)	Enable (Note 10)		
8	Automatic Amplitude Correction	Enable	Disable		
9	Not Used				

NOTES

1. *Modified GALPAT, could take up to eight minutes to complete.*
2. *The instrument will be in DCFM if the external FM source is selected (EXT FM/ØM lit) and the signal applied to the MOD IN connector is dc coupled (DC COUPLED control lit). If either of these conditions is missing, the instrument will be in ACFM (unless special function 11 is selected, forcing the instrument into DCFM mode).*
3. *If FM is enabled, the DCFM indicator is on.*
4. *If the deviation is less than 200 kHz, referred to the fundamental band, the HI DEV indicator will be off. If the deviation is greater than 200 kHz, referred to the fundamental band, the HI DEV indicator will be on.*

Figure 5E-2. Special Functions

Y					
4	5	6	7	8	9
Front Panel Control Check	Pattern Sensitive RAM check (Note 1)	Non-volatile Memory Check	Set SRQ	Reset SRQ	Display Model Number, Software Revision Number, and Self-test Results
500					

5. *HI DEV indicator turns on.*
6. *FXD RNG indicator turns off.*
7. *FXD RNG indicator turns on.*
8. *These special functions select the settled dwell-time per step when the SLOW SWEEP control is lit. SLOW SWEEP must be lit to enable the slow sweep speed selected.*
9. *Audio oscillator turns on/off when internal modulation is enabled/disabled.*
10. *Audio oscillator turns on continuously (signal present at the MOD OUT connector).*

Figure 5E-2. Special Functions (cont)

Table 5E-2. Front Panel Control Check

CODE	CONTROL	CONTROL GROUP
00	INT AM	MOD ON/OFF
01	INT FM/ØM	MOD ON/OFF
02	EXT AM	MOD ON/OFF
03	EXT FM/ØM	MOD ON/OFF
05	DC COUPLED	MOD ON/OFF
07	LOCAL (BUS ADRS)	BUS STATUS
10	FREQ	FUNCTION
11	AMPL	FUNCTION
12	MOD FREQ (FREQ STEP)	FUNCTION
13	AM (SWP WDTH)	FUNCTION
14	FM/ØM (SWP WDTH)	FUNCTION
15	SHIFT	FUNCTION
16	INTERROGATE	
20	STO (INS ABV)	MEMORY
21	DEF TOP	MEMORY
22	RCL (DEL)	MEMORY
25	NEXT↑	MEMORY LOCATION
26	NEXT↓	MEMORY LOCATION
27	TOP	MEMORY LOCATION
30	0	DATA
31	1	DATA
32	2	DATA
33	3	DATA
34	4	DATA
35	5	DATA
36	6	DATA
37	7	DATA
40	8	DATA
41	9	DATA
42	.	DATA
43	+/-	DATA
44	MHZ/V	UNITS
45	KHZ/MV	UNITS
46	HZ/UV	UNITS
47	RAD/DB (M)	UNITS
50	%	UNITS
52	↑	FREQ STEP
53	↓	FREQ STEP
54	AMPL	ROTARY KNOB
55	MOD	ROTARY KNOB
56	FREQ	ROTARY KNOB
57	OFF	ROTARY KNOB

Table 5E-2. Front Panel Control Check (cont)

CODE	CONTROL	CONTROL GROUP
61	MANUAL	SWEEP ON/OFF
62	SINGLE	SWEEP ON/OFF
63	AUTO	SWEEP ON/OFF
64	SLOW	SWEEP ON/OFF
65	OFF	SWEEP ON/OFF
66	REL FREQ	
67	REL AMPL	
70	ON	RF OUTPUT
71	X10 RESOLUTION	ROTARY KNOB
72	RESOLUTION ÷ 10	ROTARY KNOB

Push CLEAR UNITS to exit the Front Panel Control Check.

ERROR CODE		
000	No Error	No Error
001	Angle deviation entry >999 kHz.	AM depth > 99.9%.
002		Mod Freq ≤0 | Mod Freq > 255 kHz.
004		Special function code not implemented.
010	Units conversion between FM and ØM not allowed when external FM is enabled.	IEEE command syntax error.
020	FM to ØM conversion out of ØM range.	Invalid Bright Digit resolution.
040	Memory entry outside memory space.	Edit Knob operation beyond allowed range.
100	Memory stock operation above stock.	Value out of range.
200	Memory recall location contains invalid data.	Requested Bright Digit cannot be enabled during current sweep.

Figure 5E-3. Error Code Interpretation with the REJ ENT Annunciator On

ERROR CODE	102 REL FREQ (kHz, Hz)	041 AMPLITUDE REL AMPL (dBm, dB, V, mV, µV)
000	No Error	No Error
001	Frequency entry rejected — would result in f ≥526 MHz (6070A) | f ≥1052 MHz | f <100 kHz.	Amplitude entry < 7 nV | amplitude entry > 2V.
002	Frequency entry rejected — conflicts with current sweep.	Conversion to dBm falls below resolution of conversion.
004	FREQ STEP | SWP WDTH | SWP INCR rejected — out of range.	Units conversion from dB to volts or dBm not allowed.
010	Entry rejected — conflicts with current sweep.	Units conversion from volts to dBm not allowed when relative quantity is in volts.
020	Sweep rejected — cannot cover requested frequency range.	
040		
100		
200		

Note: | = or
∧ = and
! = not

Figure 5E-3. Error Code Interpretation with the REJ ENT Annunciator On (cont)

ERROR CODE	MODULATION	FREQUENCY
000	No Error	No Error
001	Deviation DAC < 400.	Mod Freq DAC < 20.
002	Deviation DAC > 800 or 1000.	Mod Freq DAC > 199.
004	rpdh^fm on (hardware overmodulation).	fm > 250 kHz ! int AM^[(fm > 50 kHz^fout > 5 MHz) ! (fm > 8 kHz^ fout < 5 MHz)] ! int ØM/fm > 12 kHz.
010	Not Used	Not Used
020	Attempted to program Deviation DAC above 1023.	AM depth ≥ 90%^f out ! *2 band ! AM depth μ 70%^f out *2 band.
040	diunll ^lvco^fm on (discriminator leveling loop).	
100	acfm^deviation > (1.5fmfout ! het band^1.5fmfout)	
200	dcfm^fm on^deviation > fout25/26	

Figure 5E-4. Error Code Interpretation with the UNCAL Annunciator On

ERROR CODE		
000	No Error	No Error
001	*2 band out of calibrated limits.	Amplitude DAC < 456.
002	Mod/divider filters out of calibrated limits.	[Ampl * (1 + %am) > (13 or 10 dBm)].
004	Fundamental frequency Fs outside calibrated limits.	unlvlh ! RF off.
010	ssulkl (sub synthesizer unlocked).	Attempt to program Amplitude DAC below 114.
020	ddnrl (delay discriminator not ready).	Attempt to program DAC above 4095.
040	rpdh^!fm on.	RPP tripped.
100	rnunkl (reference phase detector unlocked).	Amplitude below -140 dBm.
200	Not Used	Level correction disabled.

Note: | = or
^ = and
! = not

Figure 5E-4. Error Code Interpretation with the UNCAL Annunciator On (cont)

Section 6
Remote (IEEE-488, 1978) Operation

6-1. INTRODUCTION

6-2. The information in this section describes the operation of the 6070A and the 6071A via the IEEE-488 interface. Both instruments are designed in accordance with the IEEE Standard 488, 1978, and can be used with any IEEE-488 controller. The instrument can also be used on the IEEE-488 bus without a controller if listen only operation is selected (rear panel LISTEN ONLY IEEE-488 INTERFACE switch at the ON position).

6-3. The 6070A and the 6071A are completely programmable via the IEEE-488 interface. IEEE-488 messages duplicate the function of all front panel controls (except POWER, CLEAR DATA, and MOD OUT MODULATION) and can command instrument functions not available from the front panel controls, such as:

- BINARY LEARN MODES: The contents of any memory location (front panel set-up, special functions selected) can either be transmitted by the instrument on the IEEE-488 interface (Learn Memory) or be received by the instrument from the IEEE-488 interface (Learn Interface). Learn Memory and Learn Interface are described in detail in Section 6A.

- CONFIGURE TRIGGER AND TRIGGER: A string of commands defined by the CT command will be executed each time the TR command is received by the instrument. TR is the equivalent of the IEEE interface message GET. GET is defined later in this section. CT and TR are defined in Section 6A.

- IEEE-488 INTERFACE MODES: The IEEE-488 Interface Modes provide the user with enhanced systems application power. There are four IEEE-488 Interface Modes: the Record Terminator Selection Mode, the Record Mode, the Output Valid Mode, and the Unbuffered Mode.

  1. The Record Terminator Selection Mode allows the user to specify whether the record terminator is a carriage return (CR) or a line feed (LF) to allow for variances among different controllers.

  2. The Record Mode allows the instrument to accept messages but prevents the instrument from processing any of the commands until the record terminator selected by the Record Terminator Selection Mode is received. This allows a series of message units (commands) to be built into one large record and then to be processed as a whole.

  3. The Output Valid Mode disables the IEEE-488 interface three wire handshake until all instrument parameters are settled. The user does not have to compute or to allow for optimum settling; the instrument does it for him.

- Some programmed sequences take an appreciable amount of time to settle. If the Output Valid and Unbuffered Modes are selected, the instrument will not respond on the IEEE-488 interface until all parameters are settled, so it is important that the user be aware of the appropriate settling times. This information is presented in the Interface Wait Time material later in this section.

  4. If the instrument is in the Unbuffered Mode, it processes messages as fast as they are received. This mode allows the instrument to be synchronized to the controller.

6-4. Both the 6070A and the 6071A recognize the three types of messages shown in Figure 6-1. All three types are described later in this section. The Command Summary Table at the end of this section lists and briefly describes all messages recognized by the 6070A and the 6071A.

6-5. The interface messages supported by the instrument are described in Table 6-1.

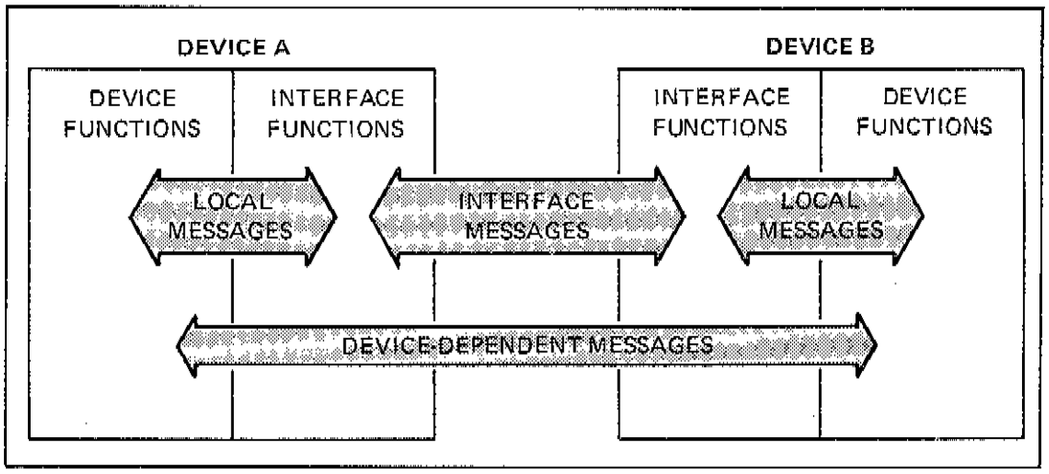

Figure 6-1. IEEE Bus Message Organization

Table 6-1. List of 6070A and 6071A Interface Functions

SH1	Complete source handshake capabilities
AH1	Complete acceptor handshake capability
T6	Basic talker, Serial poll, Unaddressed if MLA
TE0	No extended talker capability
L3	Basic listener, Listen only, Unaddressed if MTA
LE0	No extended listener capabilities
SR1	Complete service request capabilities
RL1	Complete remote, local capabilities
PP0	No parallel poll capabilities
DC1	Complete device clear capabilities
DT1	Complete device trigger capabilities
C0	No controller function
E2	Tri-state drivers

6-6. INTERFACE WAIT TIME

6-7. After the instruments are reprogrammed, the 6070A and the 6071A have an inherent 5 ms delay to allow for processing time. In many cases, all parameters are settled within that 5 ms delay. Typically, in most other cases, all parameters are settled within an additional 5 ms (10 ms total), but some programming operations require appreciable amounts of time. If the Output Valid signal is used (available at both the rear panel connector and on the IEEE-488 interface) to indicate that all parameters are settled, then there is no need for the user to compute or to allow for typical settling times. The user should be aware that the following eight operations require the indicated wait times:

1. 50 ms after the HI DEV MODE is selected (fairly infrequent).

2. Typically, 50 ms or less from the time HI DEV is disabled.

3. Typically, less than 50 ms after frequency is programmed if the instrument is not in HI DEV mode operation.

4. Effectively, 50 ms after frequency is programmed during HI DEV mode operation.

5. Typical times after enabling FM and in excess of the inherent 5 ms delay are listed in Table 6-2.

Table 6-2. Typical Delay Times (ms), in Excess of 5 ms, After Enabling FM

RF OUTPUT FREQ.	MODE		1040 TO 520 MHz	520 TO 250 MHz	250 TO 125 MHz	125 TO 62.5 MHz	62.5 MHz TO 200 kHz
OUTPUT FULL SCALE DEVIATION IN kHz							
999	DCFM	ON	250	250	250	250	250
		OFF		300	300	300	300
499	DCFM	ON	220	250	250	250	250
		OFF			300	300	
199	DCFM	ON	210	220	250	250	220
		OFF				300	
99			205	210	220	250	210
49	HI DEV	ON	205	205	210	220	205
		OFF	202				
19.9	HI DEV	ON	205	205	205	210	205
		OFF	201	202			202
9.9	HI DEV	ON	205	205	205	205	205
		OFF	201	201	202		201
4.9	HI DEV	ON	205	205	205	205	205
		OFF	201	201	201	202	201

6. Typical times after ranging FM (once FM is enabled) and in excess of the inherent 5 ms delay are listed in Table 6-3.

7. Typically, (50/modulation frequency in kHz) ms after enabling the MOD OSCILLATOR or ranging once the MOD OSCILLATOR has been enabled. Note that for low modulation frequencies, this delay may be considerable (for example, 1 Hz would delay for 50 sec).

8. Typically, 150 ms after DCFM MODE is enabled.

Table 6-3. Typical Delay Times (ms), In Excess of 5 ms, After Ranging FM

RF OUTPUT FREQ.		MODE		1040 TO 520 MHz	520 TO 250 MHz	250 TO 125 MHz	125 TO 62.5 MHz	62.5 MHz TO 200 kHz
OUTPUT FULL SCALE DEVIATION IN kHz	999	DCFM	ON	50	50	50	50	50
			OFF		100	100	100	100
	499	DCFM	ON	20	50	50	50	50
			OFF			100	100	
	199	DCFM	ON	10	20	50	50	20
			OFF				100	
	99			5	10	20	50	10
	49	HI DEV	ON	5	5	10	20	5
			OFF	2				
	19.9	HI DEV	ON	5	5	5	10	5
			OFF	1	2			2
	9.9	HI DEV	ON	5	5	5	5	5
			OFF	1	1	2		1
	4.9	HI DEV	ON	5	5	5	5	5
			OFF	1	1	1	2	1

6-8. IEEE-488 INTERFACE BUS CONNECTION

6-9. Procedures for electrically connecting the 6070A or the 6071A to the IEEE-488 bus are described in Section 3.

6-10. IEEE-488 BUS ADDRESS

6-11. Each device connected to the IEEE interface has a bus address by which it is known to other devices on the bus. The bus address of the 6070A is determined by the positions of the five rear panel IEEE-488 INTERFACE switches a1 through a5. These switches select both the listen (MLA) and talk (MTA) address. Neither the 6070A nor the 6071A supports the secondary addressing (MSA) function of the IEEE interface. The IEEE-488 material in Section 3 provides information for setting the switches to the desired IEEE-488 address. Table 6-4 provides conversion from the binary IEEE-488 address information into the decimal, hexadecimal, or ASCII equivalent.

Table 6-4. IEEE-488 Conversion

ASCII CHAR.	DECIMAL	OCTAL	HEX	BINARY 7654 3210	DEV. NO.	MESSAGE ATN=TRUE	
NUL	0	000	00	0000 0000		GTL	ADDRESSED COMMANDS
SOH	1	001	01	0000 0001			
STX	2	002	02	0000 0010			
ETX	3	003	03	0000 0011			
EOT	4	004	04	0000 0100		SDC	
ENQ	5	005	05	0000 0101		PPC	
ACK	6	006	06	0000 0110			
BELL	7	007	07	0000 0111			
BS	8	010	08	0000 1000		GET	
HT	9	011	09	0000 1001		TCT	
LF	10	012	0A	0000 1010			
VT	11	013	0B	0000 1011			
FF	12	014	0C	0000 1100			
CR	13	015	0D	0000 1101			
SO	14	016	0E	0000 1110			
SI	15	017	0F	0000 1111			
DLE	16	020	10	0001 0000			UNIVERSAL COMMANDS
DC1	17	021	11	0001 0001		LLO	
DC2	18	022	12	0001 0010			
DC3	19	023	13	0001 0011			
DC4	20	024	14	0001 0100		DCL	
NAK	21	025	15	0001 0101		PPU	
SYN	22	026	16	0001 0110			
ETB	23	027	17	0001 0111			
CAN	24	030	18	0001 1000		SPE	
EM	25	031	19	0001 1001		SPD	
SUB	26	032	1A	0001 1010			
ESC	27	033	1B	0001 1011			
FS	28	034	1C	0001 1100			
GS	29	035	1D	0001 1101			
RS	30	036	1E	0001 1110			
US	31	037	1F	0001 1111			
SPACE	32	040	20	0010 0000	0	MLA	LISTEN ADDRESSES
!	33	041	21	0010 0001	1	MLA	
"	34	042	22	0010 0010	2	MLA	
#	35	043	23	0010 0011	3	MLA	
$	36	044	24	0010 0100	4	MLA	
%	37	045	25	0010 0101	5	MLA	
&	38	046	26	0010 0110	6	MLA	
'	39	047	27	0010 0111	7	MLA	
(	40	050	28	0010 1000	8	MLA	
)	41	051	29	0010 1001	9	MLA	
*	42	052	2A	0010 1010	10	MLA	
+	43	053	2B	0010 1011	11	MLA	
,	44	054	2C	0010 1100	12	MLA	
-	45	055	2D	0010 1101	13	MLA	
.	46	056	2E	0010 1110	14	MLA	
/	47	057	2F	0010 1111	15	MLA	
0	48	060	30	0011 0000	16	MLA	
1	49	061	31	0011 0001	17	MLA	
2	50	062	32	0011 0010	18	MLA	
3	51	063	33	0011 0011	19	MLA	
4	52	064	34	0011 0100	20	MLA	
5	53	065	35	0011 0101	21	MLA	
6	54	066	36	0011 0110	22	MLA	
7	55	067	37	0011 0111	23	MLA	
8	56	070	38	0011 1000	24	MLA	
9	57	071	39	0011 1001	25	MLA	
:	58	072	3A	0011 1010	26	MLA	
;	59	073	3B	0011 1011	27	MLA	
<	60	074	3C	0011 1100	28	MLA	
=	61	075	3D	0011 1101	29	MLA	
>	62	076	3E	0011 1110	30	MLA	
?	63	077	3F	0011 1111		UNL	

ASCII CHAR.	DECIMAL	OCTAL	HEX	BINARY 7654 3210	DEV. NO.	MESSAGE ATN=TRUE	
@	64	100	40	0100 0000	0	MTA	TALK ADDRESSES
A	65	101	41	0100 0001	1	MTA	
B	66	102	42	0100 0010	2	MTA	
C	67	103	43	0100 0011	3	MTA	
D	68	104	44	0100 0100	4	MTA	
E	69	105	45	0100 0101	5	MTA	
F	70	106	46	0100 0110	6	MTA	
G	71	107	47	0100 0111	7	MTA	
H	72	110	48	0100 1000	8	MTA	
I	73	111	49	0100 1001	9	MTA	
J	74	112	4A	0100 1010	10	MTA	
K	75	113	4B	0100 1011	11	MTA	
L	76	114	4C	0100 1100	12	MTA	
M	77	115	4D	0100 1101	13	MTA	
N	78	116	4E	0100 1110	14	MTA	
O	79	117	4F	0100 1111	15	MTA	
P	80	120	50	0101 0000	16	MTA	
Q	81	121	51	0101 0001	17	MTA	
R	82	122	52	0101 0010	18	MTA	
S	83	123	53	0101 0011	19	MTA	
T	84	124	54	0101 0100	20	MTA	
U	85	125	55	0101 0101	21	MTA	
V	86	126	56	0101 0110	22	MTA	
W	87	127	57	0101 0111	23	MTA	
X	88	130	58	0101 1000	24	MTA	
Y	89	131	59	0101 1001	25	MTA	
Z	90	132	5A	0101 1010	26	MTA	
[	91	133	5B	0101 1011	27	MTA	
\	92	134	5C	0101 1100	28	MTA	
]	93	135	5D	0101 1101	29	MTA	
^	94	136	5E	0101 1110	30	MTA	
_	95	137	5F	0101 1111		UNT	
`	96	140	60	0110 0000	0	MSA	SECONDARY ADDRESSES
a	97	141	61	0110 0001	1	MSA	
b	98	142	62	0110 0010	2	MSA	
c	99	143	63	0110 0011	3	MSA	
d	100	144	64	0110 0100	4	MSA	
e	101	145	65	0110 0101	5	MSA	
f	102	146	66	0110 0110	6	MSA	
g	103	147	67	0110 0111	7	MSA	
h	104	150	68	0110 1000	8	MSA	
i	105	151	69	0110 1001	9	MSA	
j	106	152	6A	0110 1010	10	MSA	
k	107	153	6B	0110 1011	11	MSA	
l	108	154	6C	0110 1100	12	MSA	
m	109	155	6D	0110 1101	13	MSA	
n	110	156	6E	0110 1110	14	MSA	
o	111	157	6F	0110 1111	15	MSA	
p	112	160	70	0111 0000	16	MSA	
q	113	161	71	0111 0001	17	MSA	
r	114	162	72	0111 0010	18	MSA	
s	115	163	73	0111 0011	19	MSA	
t	116	164	74	0111 0100	20	MSA	
u	117	165	75	0111 0101	21	MSA	
v	118	166	76	0111 0110	22	MSA	
w	119	167	77	0111 0111	23	MSA	
x	120	170	78	0111 1000	24	MSA	
y	121	171	79	0111 1001	25	MSA	
z	122	172	7A	0111 1010	26	MSA	
{	123	173	7B	0111 1011	27	MSA	
|	124	174	7C	0111 1100	28	MSA	
}	125	175	7D	0111 1101	29	MSA	
~	126	176	7E	0111 1110	30	MSA	
	127	177	7F	0111 1111			

6-12. The current address setting can be displayed on the front panel by pressing SHIFT FUNCTION and then BUS ADRS. The IEEE-488 address of the instrument appears in decimal in the central digits of the FREQUENCY Display as long as the BUS ADRS control is pressed. The Address switches are continuously being read and can be modified and displayed until the desired address is selected.

6-13. If the LISTEN ONLY IEEE-488 INTERFACE switch is at the ON position, the instrument is in the listen-only state. The positions of the IEEE-488 INTERFACE switches is ignored because the instrument considers itself to be always addressed as a listener.

6-14. REMOTE/LOCAL OPERATION

6-15. When the 6070A or the 6071A is being programmed from the front panel it is in local (manual) operaton. When the IEEE-488 interface is controlling the instrument, it is in the remote (system) state of operation. When the LISTEN ONLY IEEE-488 INTERFACE switch is at the ON position, the instrument is in the listen-only state of operation. The instrument communicates on the IEEE 488 bus in all three types of operations.

6-16. When in local, the 6070A or 6071A responds only to the IEEE Interface Messages, Remote, Local Lockout, and Clear Local Lockout. All other messages are handshaken but ignored. This means that IEEE-488 interface and device dependent messages (commands) sent to the instrument while it is in local are not acted upon. When the 6070A or 6071A is in the local mode, the front panel REM annunciator is off. The ADDR annunciator lights whenever the 6070A or 6071A is addressed as a listener or as a talker.

6-17. When in remote, the 6070A or 6071A responds to the IEEE Interface Messages and all device dependent messages. The REM annunciator is on when the instrument is in remote.

6-18. When in the listen-only, the remote-local IEEE function does not apply. In listen-only, the instrument is always in local, and is always addressed as a listener so IEEE-488 commands are processed. This switch is checked only when an instrument power-on is performed or when special function 02 is selected. The current value of the listen-only control bit is shown when the instrument bus address is displayed.

6-19. Enable remote operation by addressing the generator as a listener when REN is active. The REN annunciator lights and all front panel controls except the POWER and the LOCAL BUS STATUS buttons are disabled. The instrument will process data messages received from the IEEE interface. When going from local to remote, if a front panel button is being pushed, the remote input is accepted and buffered, but only processed when the front panel button is released. The instrument remains in remote until the front panel LOCAL BUS STATUS control is pressed or until the IEEE Interface Message Go To Local (GTL) or Clear Local Lockout (not REN) and Go To Local is received.

6-20. When going from remote to local, unprocessed commands in the input buffer continue to be processed until completion or until a front panel entry is made. A front panel entry includes pushing any button (except LOCAL) or spinning the Edit Knob.

6-21. LOCAL MESSAGES

6-22. Introduction

6-23. Local messages originate within the instrument or at the front panel and cause action to be taken at the IEEE interface. One common example is the local message generated by the front panel LOCAL BUS STATUS control.

6-24. Listen-only

6-25. The 6070A and the 6071A implement the listen-only (lon) function, described in the IEEE-488 1978 Standard Digital Interface for Programmable Instrumentation, when the rear panel LISTEN ONLY IEEE-488 INTERFACE switch is on.

- This switch is sampled only during instrument power-on or when special function 02 is selected.
- Other references in this manual:
  1. The IEEE-488 material in Section 2
  2. The material on IEEE-488 address presented earlier in this section

6-26. Request Service

6-27. The 6070A and the 6071A implement the request service(rsv) message described in the IEEE-488 1978 Standard Digital Interface For Programmable Instrumentation.

- This message is generated from the front panel when special function 07 is selected if the SRQ mask is properly set.
- Other references in this manual: See the SRQ commands in Section 6A.

6-28. Return to Local

6-29. The 6070A IEEE interface will be placed in the local state when the return-to-local message is received, provided that the instrument is not in local lockout. The return-to-local message is generated by the front panel LOCAL BUS ADDRESS control.

6-30. INTERFACE MESSAGES

6-31. Introduction

6-32. Interface messages are used to manage the IEEE-488interface system. These messages consist of combinations of the IEEE-488 interface command lines and messages sent on the IEEE-488 data lines (DIO1 through DIO8). Table 6-4 shows the proper states of the data lines for each interface message. The following paragraphs describe the interface messages which the 6070A and the 6071A recognize. The Command Summary Table lists the interface messages.

6-33. Remote Interface Message

6-34. The instrument will enter remote operation when the correct MLA is recieved on DIO1 through DIO8 while the ATN command line is true.

- The instrument remains in remote operation until the front panel LOCAL control is pressed or until the GTL (Go To Local) interface message is received.

  1. If the interface message LLO (Local Lockout) has been received, the REN command line must be false before the LOCAL control will have any effect.

  2. The instrument actually returns to local when the LOCAL control is released, not when the control is pressed.

- Other references in this manual:

  1. Local Interface Message material in this section

2. Local Lockout Interface Message material in this section

3. Clear Local Lockout Interface Message material in this section

6-35. Local Interface Message

6-36. The instrument returns to local operation upon receipt of the correct MLA followed by GTL (Go To Local) while the ATN command line is true or when the REN command line is false.

- REN false clears the local lockout condition if it exists.
- The front panel LOCAL control duplicates the function of the Local Interface Message except when the local lockout condition exists.
- Other references in this manual:

  1. Local Lockout Interface Message material in this section
  2. Clear Local Lockout Interface Message material in this section
  3. Remote Interface Message material in this section

6-37. Local Lockout Interface Message

6-38. The instrument ignores GTL and the front panel LOCAL control after receiving the correct MLA followed by LLO (Local Lockout) while the ATN and REN command lines are true.

- Local lockout is disabled when REN goes false.
- Other references in this manual:

  1. Local Interface Message material in this section
  2. Remote Interface Message material in this section
  3. Clear Local Lockout Interface Message material in this section

6-39. Clear Local Lockout Interface Message

6-40. The instrument clears the local lockout condition when the REN command line goes false.

- Other references in this section:

  1. Remote Interface Message material in this section
  2. Local Interface Message material in this section
  3. Local Lockout Interface Message material in this section

6-41. Device Clear Interface Message

6-42. The instrument returns to the standard power on setup uponreceipt of the interface message DCL (Device Clear) while the ATN command line is true and the instument is in the Remote state.

- DCL duplicates the function of the 6070A/6071A CL command.

- Other references in this manual:

  1. Select Device Clear Interface Message material in this section

  2. CL command material in Section 6A

6-43. Select Device Clear Interface Message

6-44. The instrument returns to a standard power on setup upon receipt of the correct MLA followed by SDC (Select Device Clear) while ATN is true and the instrument is in the Remote state.

- SDC duplicates the function of the 6070A/6071A CL command.

- Other references in this manual.

  1. Device Clear Interface Message material in this section

  2. CL command material in Section 6A

6-45. Interface Clear Interface Message

6-46. The instrument stops listening and talking when the IFC command line goes true.

- Other references in this manual: None

6-47. Service Request Interface Message

6-48. The 6070A and the 6071A set the SRQ command line true to notify the IEEE-488 bus that the instrument requires service.

- Other references in this manual:

  1. Serial Poll Enable And Serial Poll Disable Interface Messages material in this section

  2. SRQ material in Section 6A

6-49. Serial Poll Enable and Serial Poll Disable Interface Messages

6-50. When the SRQ command line is true, the controller on the IEEE-488 interface enables a serial poll (SPE) of the devices on the IEEE-488 bus. Once the instrument that requested service is located, the controller disables serial poll (SPD).

- Upon receipt of SPE (Serial Poll Enable) while the ATN command line is true, the instrument responds, on the IEEE-488 interface, with a status message that is the decimal equivalent of the SRQ byte.

- The instrument does not respond with an SRQ status message after receiving the SPD (Serial Poll Disable) message while the ATN command line is true.

- Other references in this manual: The SRQ material in Section 6A.

6-51. DEVICE DEPENDENT MESSAGES

6-52. Introduction

6-53. Device dependent messages implement the set of functions available to the user through the front panel, plus additional functions available only via the IEEE interface. There are two types of device dependent messages: status messages and program data messages. Program data messages command actions and status messages contain the responses to those commands. For example, a program data message could command the

instrument to send the results of the instrument power-on self tests (command IT). The status message that the instrument returns on the IEEE-488 bus is the coded results of the power-on self tests. Since the instrument is a source, rather than a measurement instrument, the majority of device dependent messages are program data messages sent to the instrument.

6-54. Program Data Messages

6-55. Program Data Messages are recognized when the instrument is a listener. Program Data Messages are composed of one or more command(s). Each command specifies one instrument parameter. The format of command strings or records is in most cases identical to the format of the corresponding front panel entry. For example, the front panel entry which programs frequency is FREQ 100 MHz. The corresponding IEEE message unit is 'FR100MZ'.

6-56. Figure 6-2 shows the preferred format of 6070A/6071A IEEE program data messages. In the figure, frequency is programmed to 100 MHz, amplitude is programmed to 3 dBm, and RF output is turned on. Note that commands are separated by a semicolon or comma and terminated by a linefeed character (carriage return can be designated as the record terminator instead of linefeed) which facilitates recovery in the event of a syntax error, and enhance readability. These string and record terminators are discussed in the Message Terminator material that follows in this section. Commands are defined in Section 6A of this manual.

COMMAND	STRING TERM.	COMMAND	STRING TERM.	COMMAND	RECORD TERM.
FR100MZ	;	AP 3 DB	,	RO1	⟨LF⟩

Figure 6-2. Example Program Data Message

6-57. Status Messages

6-58. Status messages are data messages sent by the instrument (when the instrument is a talker) in response to some program data messages. The instrument supports single as well as multi- byte status messages. The status messages are defined in the text of Section 6A with the commands to which each status message responds.

6-59. Message Terminators

6-60. Device dependent messages can be terminated with either string terminators or record terminators.

- Both string and record terminators are delimiting characters and are not part of the message itself. Both string terminators and record terminators are ignored during normal operation but are used for error recovery. An IEEE-488 syntax error causes all commands from the point of the error up to the next terminator to be discarded.

- String terminators are ; (semicolon) and , (comma).
- The designated record terminator can be line feed (LF) or carriage return (CR). The @ command is used to designate the record terminator.
- Other references in this manual: The @ command is defined in Section 6A.

6-61. IEEE-488 Alphabet

6-62. The 6070A/6071A alphabet consists of:

- The digits 0 through 9
- The letters a through z and the letters A through Z (No distinction is made between upper and lower case letters).
- The special characters @ . , ; + - CR and LF

Parity bit:

1. All characters received are treated as though the parity (high order) bit is zero.
2. All characters transmitted by the instrument have their parity bit set to zero.

6-63. COMMAND SUMMARY TABLE

6-64. Table 6-5 lists all commands and IEEE-488 Interface Messages recognized by the 6070A and the 6071A.

Table 6-5. Summary of 6070A/6071A Commands and IEEE-488 Interface Messages

DEVICE DEPENDENT (DATA) MESSAGES

1. There are four general forms of 6070A/6071A device dependent commands:

   a. ⟨HEADER⟩
   b. ⟨HEADER⟩⟨DATA⟩
   c. ⟨HEADER⟩⟨DATA⟩⟨SUFFIX⟩
   d. ⟨HEADER⟩⟨SUFFIX⟩

Where:

HEADER is one of two ASCII characters that define the type of message.

DATA is one of six possible entries that modify the header or provide related information.

a. Boolean digit. 0 or 1 that indicates OFF or ON state, respectively.

b. Unsigned integer. It is understood that, for the 6070A/6071A, the number is hexadecimal if the left hand character in the unsigned integer is an X.

c. Unsigned, two digit number. This numeric is used with the SP (special function) message only.

d. Floating decimal point notation. It is understood that, for the 6070A/6071A, the power to which the stated number is raised will follow the designator E unless the power is one. Neither the designator E nor the power is stated if the power is a plus one. For example, 123E-6 is 0.000123 and 123E3 is 123,000, but 123 is 123.

Table 6-5. Summary of 6070A/6071A Commands and IEEE-488 Interface Messages (cont)

e. MEMORY LOCATION. This numeric corresponds to the front panel Memory Location entry and can be any digit combination from 0 to 9 (0 to 50 in instruments equipped with the 607XA-570 Nonvolatile Memory Option) and 99 or the special character entries NU, ND, and TP which correspond directly to the front panel MEMORY LOCATION controls: NEXT↑, NEXT↓, and TOP.

f. String Record. This numeric is used with the CT (configure trigger) message only.

SUFFIX is one of six possible entries that modify the header or the data or provide additional information:

a. Amplitude units: V = volts
MV = millivolts
UV = microvolts
NV = nanovolts
DB = dB or dBm

b. Frequency units: GZ = gigahertz
MZ = megahertz
KZ = kilohertz
HZ = hertz

c. Phase modulation units: RD = radians.

d. AM depth units: PC = %

e. LI string which has a complete front panel setup coded into the string.

f. DAC suffix designator. This suffix is used only with the OD (output DAC bits) message.

2. The instrument recognizes both upper and lower case characters, but treats all characters as upper case. For example, the instrument interprets mv, mV, Mv,or MV as being MV.

3. The instrument ignores spaces and tabs.

4. The instrument recognizes two types of command terminators: string terminators (, or ;) and record terminators (CR, LF, or EOI). String terminators are ignored during normal operation, but are used for synchronization purposes during syntax error recovery. During syntax error recovery, everything is discarded starting with the wrong command and ending with the next end of string (EOS) or the next end of record (EOR) terminator. End of record terminators cause command records to be processed when the instrument is in the record IEEE-488 interface mode. CR and LF are mutually exclusive; either one or the other can be designated as the EOR character. The instrument ignores the character not designated as the EOR character.

Table 6-5. Summary of 6070A/6071A Commands and IEEE-488 Interface Messages (cont)

DEVICE DEPENDENT COMMANDS				
COMMAND USE	COMMAND			COMMENTS
	HEADER	NUMERIC	SUFFIX	
Amplitude and Relative Amplitude Commands				
Program Amplitude	AP	Floating Point Values	V MV UV NV DB	Programs amplitude in units of: volts millivolts microvolts nanovolts dB or dBm
		None	V MV UV NV DB	Changes amplitude units to: volts millivolts microvolts nanovolts dB or dBm
Relative Amplitude	RA	1	None	Enters relative amplitude operation.
		0	None	Exits relative amplitude operation.
Binary Learn Modes Commands				
Store a Front Panel Setup	LI	Memory Location	LI String	The instrument stores the LI string (front panel setup) into the addressed memory location.
Send a Front Panel Setup	LM	Memory Location	None	The instrument responds, on the IEEE-488 interface, with the contents of the memory location.
Clear Commands				
Device Clear	CL	None	None	Same function as the IEEE-488 messages SDC and DCL.
Clear IEEE-488 Output Buffer	CB	None	None	Clears IEEE-488 Output Buffer.
Edit Commands				
POSITION THE BRIGHT DIGIT:				
AMPLITUDE Display	AB	Floating Point Value	V MV UV NV DB	Positions the Bright Digi in the AMPLITUDE Display with the stated resolution. For example, enter AB10MV for a 10 mV resolution.
MODULATION Display for FM|ØM	DB	Floating Point Value	GZ MZ KZ HZ	

Table 6-5. Summary of 6070A/6071A Commands and IEEE-488 Interface Messages (cont)

COMMAND USE	COMMAND			COMMENTS
	HEADER	NUMERIC	SUFFIX	
Edit Commands (cont)				
FREQUENCY Display	FB	Floating Point Value	GZ MZ KZ HZ	Positions the Bright digit in the AMPLITUDE Display with the stated resolution. For example, enter AB10MV for a 10 mV resolution.
MODULATION Display For Modulation Frequency	MB	Floating Point Value	MZ KZ HZ	
MODULATION Display For AM	PB	Floating Point Value	PC	
CHANGE THE BRIGHT DIGIT:				
AMPLITUDE	KA	Floating Point Value	None	Edits amplitude.
Edit Knob	KB	Floating Point Value	None	Duplicates the function of the Edit Knob. Use for Bright Digit or MANUAL sweep.
FM|ØM	KD	Floating Point Value	None	Edits angle modulation.
FREQUENCY	KF	Floating Point Value	None	Edits frequency.
MOD FREQ	KM	Floating Point Value	None	Edits modulation frequency.
AM	KP	Floating Point Value	None	Edits AM.
Frequency and Relative Frequency Commands				
Frequency Programming	FR	Floating Point Value	GZ MZ KZ HZ	Programs frequency in units of: gigahertz megahertz kilohertz hertz
Relative Frequency	RF	1	None	Enters relative frequency operation.
		0	None	Exits relative frequency operation.

Table 6-5. Summary of 6070A/6071A Commands and IEEE-488 Interface Messages (cont)

COMMAND USE	COMMAND			COMMENTS
	HEADER	NUMERIC	SUFFIX	
Frequency Step Commands				
Program FREQ STEP Size	FS	Floating Point Value	GZ MZ KZ HZ	Programs frequency step size.
Step Up	SU	None	None	Increments frequency one frequency step size.
Step Down	SD	None	None	Decrements frequency one frequency step size.
IEEE-488 Interface Modes Command				
The IEEE-488 Interface Modes use one header, @, and 16 possible numerics -- 0 through 15. Other than 0, the numerics are the logical sum of the numerics 1, 2, 4, and 8. All IEEE-488 Interface Modes implied by the numeric are enabled. All IEEE-488 Interface Modes not implied by the numeric are disabled.				
Disable	@	0	None	Disables all IEEE-488 Interface Modes.
Alternate Record Terminator Mode		1	None	Enables the Alternate Record Terminator Mode. CR, the alternate record terminator, is designated as the record terminator when this mode is enabled. If this mode is disabled, LF is designated as the record terminator.
Record Mode		2	None	Enables the Record Mode. In the record mode, the instrument waits to process commands until an end of record terminator is received.
Output Valid Mode		4	None	Enables the Output Valid Mode. The IEEE-488 three-wire handshake is disabled until all instrument parameters are settled.
Unbuffered Mode		8	None	Enables the Unbuffered Mode. No input buffering is performed.
Interrogate Commands				
SRQ Mask	IM	None	None	Interrogates the SRQ mask. The instrument responds, on the IEEE-488 Interface, with the decimal value of the SRQ mask.

Table 6-5. Summary of 6070A/6071A Commands and IEEE-488 Interface Messages (cont)

COMMAND USE	COMMAND			COMMENTS
	HEADER	NUMERIC	SUFFIX	
Interrogate Commands (cont)				
Option Loading	IO	None	None	Interrogates the option loading. The instrument responds, on the IEEE-488 interface, with the message: d1, d2, d3⟨EOR⟩ Where: d1 = 0 The instrument is a 6070A. d1 = 1 The instrument is a 6071A. d2 = 0 The -570 Option is not installed. d2 = 1 The -570 Option is installed. d3 = 0 The -870 Option is not installed. d3 = 1 The -870 Option is installed.
Rejected Entry	IR	None	None	Interrogates the rejected entry error codes. See the pullout card or Section 5E for interpretation.
Self Tests	IT	None	None	Interrogates the results of the self tests. See the pullout card or Section 5E for interpretation.
UNCAL	IU	None	None	Interrogates the uncalibrated error codes. See the pullout card or Section 5E for interpretation.
Software Version	IV	None	None	Interrogates the software version. The instrument responds, on the IEEE-488 interface, with the status message: Vxx.x⟨EOR⟩ or Vx.x⟨EOR⟩ Where: x = decimal digits 0 through 9. ⟨EOR⟩ is record terminator.
Memory Commands				
DELETE	DE	Memory Location	None	Deletes the contents of the addressed memory location.
DEFINE TOP	DT	Memory Location	None	Defines the addressed memory location as the top location in the memory stack.
INSERT	IN	Memory Location	None	Inserts the current front panel setup in the location above the memory location addressed.
RECALL	RC	Memory Location	None	Recalls the front panel setup stored at the addressed memory location.
STORE	ST	Memory Location	None	Stores the current front panel setup at the memory location addressed.

Table 6-5. Summary of 6070A/6071A Commands and IEEE-488 Interface Messages (cont)

COMMAND USE	COMMAND			COMMENTS
	HEADER	NUMERIC	SUFFIX	
Modulation Commands				
ANGLE MODULATION:				
Program FM|ØM	FM	Floating Point Value	MZ KZ HZ RD	Programs angle modulation in units: megahertz kilohertz hertz radians (ØM)
		None	MZ KZ HZ RD	Changes angle modulation in units: megahertz kilohertz hertz radians (ØM)
EXT FM|ØM	FE	0	None	Disables external angle modulation.
		1	None	Enables external angle modulation.
INT FM|ØM	FI	0	None	Disables internal angle modulation.
		1	None	Enables internal angle modulation.
AMPLITUDE MODULATION:				
Program AM	AM	Floating Point Value	PC	Programs AM depth is percent.
EXT AM	AE	0	None	Disables external AM.
		1	None	Enables external AM.
INT AM	AI	0	None	Disables internal AM.
		1	None	Enables internal AM.
MODULATION FREQUENCY:				
Enter MOD FREQ	MF	Floating Point Value	MZ KZ HZ	Programs modulation frequency in units: megahertz kilohertz hertz
COUPLING: DC COUPLED	DC	0	None	The MOD IN signal is AC coupled.
		1	None	The MOD IN signal is DC coupled.
Monitor Commands				
The Monitor Commands are used in maintenance procedures. Use of the Monitor Commands is described in the 6070A/6071A Service Manual.				
Define I/O Port Address	DO	Unsigned Integer	None	Defines the I/O port address.
Define RAM/ROM Address	DW	Unsigned Integer	None	Defines the RAM/ROM base address.

Table 6-5. Summary of 6070A/6071A Commands and IEEE-488 Interface Messages (cont)

COMMAND USE	COMMAND			COMMENTS
	HEADER	NUMERIC	SUFFIX	
Monitor (cont)				
Read I/O Port Bit	IB	Unsigned Integer	None	Reads the I/O port bit.
Output Bit	OB	Boolean Data	None	Sets the address I/O port bit to the Boolean value.
Bit Count	OC	Unsigned Integer	None	Bit count from 0 through 16.
Alter DAC Value	OD	Unsigned Integer	None	Changes the value of commonly used DACs.
Read Byte	RB	Unsigned Integer	None	Reads the value of the addressed byte.
Read Word	RW	Unsigned Integer	None	Reads the addressed word.
Write Byte	WB	Unsigned Integer	None	Writes into the addressed byte.
Write Word	WW	Unsigned Integer	None	Writes into the addressed word.
Read Attenuation	XA	None	None	Reads the current attenuation.
Write Attenuation	XB	Unsigned Integer	None	Changes attenuation to 6 dB times the unsigned integer. The integer can be -1 to 23.
Set Frequency Hardware	XD	Floating Point Value	None	Sets the frequency hardware directly.
Local Operation Alert Mode	XF	Boolean Value	None	Enables or disables a mode that sends @7 on the IEEE-488 bus each time a front panel entry is made.
MOD/DIVIDER ON/OFF	XR	Boolean Value	None	Turns MOD/DIVIDER on and off.
RF Output Commands				
RF OUTPUT	RF	0	None	Turns off RF OUTPUT.
		1	None	Turns on RF OUTPUT.
Special Function Command				
SPECIAL FUNCTION	SP	Unsigned Integer	None	Selects special functions.

Table 6-5. Summary of 6070A/6071A Commands and IEEE-488 Interface Messages (cont)

COMMAND USE	COMMAND			COMMENTS
	HEADER	NUMERIC	SUFFIX	
SRQ Commands				
Interrogate SRQ Mask	IM	None	None	Interrogates the SRQ mask. The instrument responds, on the IEEE-488 interface, with the decimal value of the SRQ mask.
Set SRQ Mask	SM	Unsigned Integer	None	The SRQ mask is set to the equivalent of the decimal value sent with SM.
Sweep Commands				
AUTO	AS	None	None	Starts AUTO SWEEP operation.
MANUAL	MS	None	None	Starts MANUAL SWEEP operation.
Program Sweep Increment	SI	Floating Point Value	GZ MZ KZ HZ	Programs sweep increment in the units: gigahertz megahertz kilohertz hertz
SLOW	SL	0	None	SLOW SWEEP off.
		1	None	SLOW SWEEP on.
OFF	SO	None	None	Turns sweep off.
SINGLE	SS	None	None	Starts SINGLE SWEEP operation.
Program Sweep Width	SW	Floating Point Value	GZ MZ KZ HZ	Programs sweep width in units: gigahertz megahertz kilohertz hertz
Trigger Commands				
Configure Trigger	CT	String Record	None	Configures the trigger. Each time TR or GET is received, the instrument executes the string of commands. The String record must end with a record terminator.
Trigger	TR	None	None	Trigger command. Equivalent to the GET IEEE-488 Interface message. Upon processing TR, the instrument executes the CT String Record.

Table 6-5. Summary of 6070A/6071 Commands and IEEE-488 Interface Messages (cont)

IEEE-488 INTERFACE MESSAGES						
NAME	MESSAGE ON DI01-DI08	COMMAND LINE STATUS				RELATED MESSAGES
		ATN	REN	IFC	SRQ	
Remote	MLA	True	True	—	—	—
Local	GTL	True	True	—	—	MLA
Local Lockout	LLO	True	True	—	—	—
Clear Local Lockout	—	—	False	—	—	—
Device Clear	DCL	True	True	—	—	—
Select Device Clear	SDC	True	True	—	—	MLA
Interface Clear	—	—	—	True	—	—
Service Request	—	—	—	—	True	—
Serial Poll Enable	SPE	True	True	—	—	—
Serial Poll Disable	SPD	True	True	—	—	—

Section 6A
6070A/60701A Commands

6A-1. INTRODUCTION

6A-2. The information in this section defines in detail the commands and status messages introduced in the Device Dependent Messages material in Section 6. The material in Section 6 described commands and status messages in general. Three simple programming examples are provided at the end of this section.

6A-3. The commands are received and the corresponding status messages are transmitted by the instrument via the IEEE-488 interface data lines (DI01 through DI08) when ATN is false. Since the 6070A and the 6071A are sources rather than measurement devices, most of the device dependent messages are commands sent to the 6070A or the 6071A.

6A-4. The commands are divided by type into 15 groups. Table 6A-1 lists these groups in the order they appear in this section and lists the commands in each group in the order in which they are presented. Status messages are described with the applicable commands.

6A-5. If the IEEE-488 Record Mode is not selected (@2), commands sent to the 6070A or to the 6071A do not have to be terminated with any special character (for example, LF) in order to be processed. Commands can be separated by formatting characters such as commas (,), semi-colons (;), spaces, or horizontal tabs. These formatting characters are ignored during normal processing.

6A-6. SYNTAX

6A-7. Introduction

6A-8. The commands are composed of various combinations of three types of character groups: headers, suffixes, and numerics. All commands must have a header, but may or may not have a numeric or a suffix. There are four possible combinations of header, numeric, and suffixes:

1. ⟨HEADER⟩
2. ⟨HEADER⟩ ⟨NUMERIC⟩
3. ⟨HEADER⟩ ⟨NUMERIC⟩ ⟨SUFFIX⟩
4. ⟨HEADER⟩ ⟨SUFFIX⟩

6A-9. Syntax Diagrams

6A-10. Most command descriptions are illustrated by a syntax diagram. The symbol convention for these diagrams is shown in Figure 6A-1. Note that the IEEE-488 command lines and universal messages which are equivalent to 6070A/6071A Device Dependent Messages are shown in parallel with a dotted line connection.

Table 6A-1. Arrangements of Commands in Section 6A

COMMAND TYPE	ASSOCIATED COMMANDS
Clear	CB, CL
SRQ	IM, SM
IEEE-488 Interface Modes	@
Binary Learn Modes	LI, LM
Trigger	CT, TR
Interrogate	IO, IR, IT, IU, IV
REL FREQ Control Equivalent	RF
REL AMPL Control Equivalent	RA
RF OUTPUT Control Equivalent	RO
Equivalents of Function Control	
AM	AM
AMPL	AP
FREQ	FR
FM|ØM	FM
SHIFT and FREQ STEP	FS
MOD FREQ	MF
SHIFT and SWP INCR	SI
SHIFT	SP
SHIFT and SWP WIDTH	SW
Equivalents of FREQ STEP Controls	SD and SU
Eqivalents of MEMORY Controls	
SHIFT and DELETE MEMORY	DE
TOP	DT
SHIFT and INSERT MEMORY	IN
RECALL	RC
STORE	ST
Equivalents of Edit Controls	
AMPL EDIT Controls	AB
FREQ EDIT Controls	FB
MOD EDIT Controls:	
ANGLE MODULATION	DB
MODULATION FREQUENCY	MB
AM	PB
Edit Knob:	
AMPLITUDE Display Field	KA
MODULATION Display Field (FM:ØM)	KD
FREQUENCY Display Field	KF
MODULATION Display Field (MOD FREQ)	KM
MODULATION Display Field (AM)	KP
Equivalents of Modulation Controls	
EXT AM	AE
INT AM	AI
EXT FM|ØM	FE
INT FM|ØM	FI
DC COUPLED	DC
Equivalents of Sweep Controls	
SINGLE	SS
AUTO	AS
MANUAL	MS
OFF	SO

Table 6A-1. Arrangements of Commands in Section 6A (cont)

COMMAND TYPE	ASSOCIATED COMMANDS
Monitor Commands	
Read Memory Word	RW
Read Memory Byte	RB
Write Memory Word	WW
Write Memory Byte	WB
Read I/O Port Bit	IB
Modifying a Single I/O Port Bit	DO, OB
Modifying a Group of Bits	DO, OC, OM
Modifying the Contents of Select DACS	OD
Read the Current Value of Attenuation	XA
Write the Current Value of Attenuation	XB
Set the Frequency Hardware Directly	XD
Local Operation Alert Interrupt	XF
MOD/Divider RF ON/OFF	XR

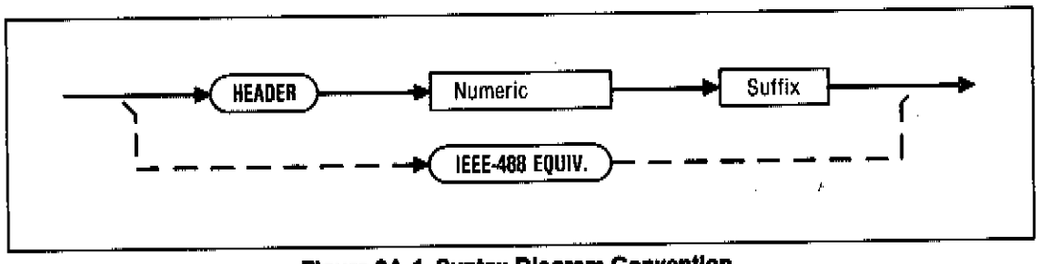

Figure 6A-1. Syntax Diagram Convention

6A-11. Numeric Data

6A-12. If numeric data is sent, it follows the header and precedes the suffix (if there is a suffix). The numeric data states the numerical amount of data entries, designates a memory location, determines which option of a command will be used, selects a special function of the instrument, or defines the commands to be executed when the trigger command (TR) is sent. There are five types of numeric data: Boolean, unsigned integer, memory location, floating point, and the command record numeric. The numeric data can be expressed in one of two number systems: decimal and hexadecimal. Decimal digits are defined as base ten integers 0 through 9. Hexadecimal numeric values are defined as base 16 integers from 0 through 9 and A through F.

6A-13. BOOLEAN NUMERIC DATA

6A-14. Boolean numeric data is either be a 1 or a 0.

- When Boolean numeric data accompanies a command, the value 1 usually enables the instrument function associated with the command and the value 0 disables the instrument function. For example:

  1. AI1 enables internal AM.

2. AI0 disables internal AM.

- Other references in this manual: None.

6A-15. UNSIGNED INTEGER NUMERIC DATA

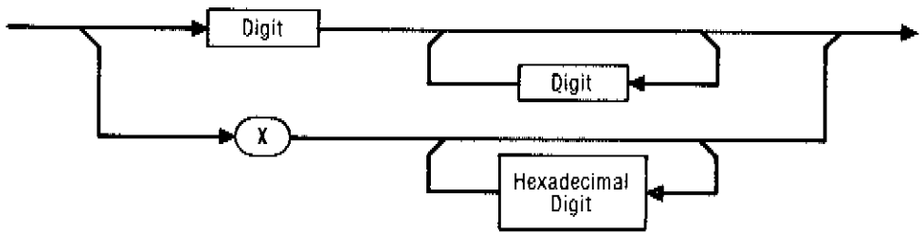

6A-16. As the syntax diagram shows, the unsigned integer numeric data can have one or more decimal or hexadecimal digits.

- Hexadecimal digits are preceded by an X.
- While the unsigned integer numeric seems to allow any arbitrary length, the 6070A and the 6071A rejects entries with values that exceed the maximum value of the function being programmed.
- Other references in this manual: None.

6A-17. MEMORY LOCATION NUMERIC DATA

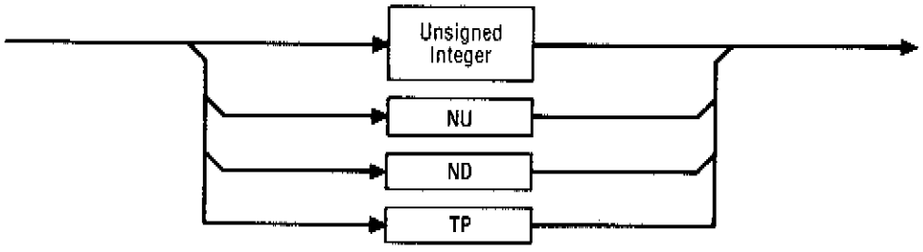

6A-18. As the syntax diagram shows, the memory location numeric data duplicate the functions of the front panel MEMORY LOCATION controls.

- The memory location numeric data NU duplicates the function of the NEXT↑ MEMORY LOCATION control.
- The memory location numeric data ND duplicates the function of the NEXT↓ MEMORY LOCATION control.
- The memory location numeric data TP duplicates the function of the TOP MEMORY LOCATION control.
- The unsigned integer memory location numeric data duplicates the function of the MEMORY LOCATION CONTROLS 0 through 9.

  1. Unsigned integers are defined in the preceding paragraphs.

  2. Memory locations are never more than two digits.

3. There are no negative memory locations.

4. The current front panel setup is in memory location 99.

- Other references in this manual: None.

6A-19. FLOATING POINT NUMERIC DATA

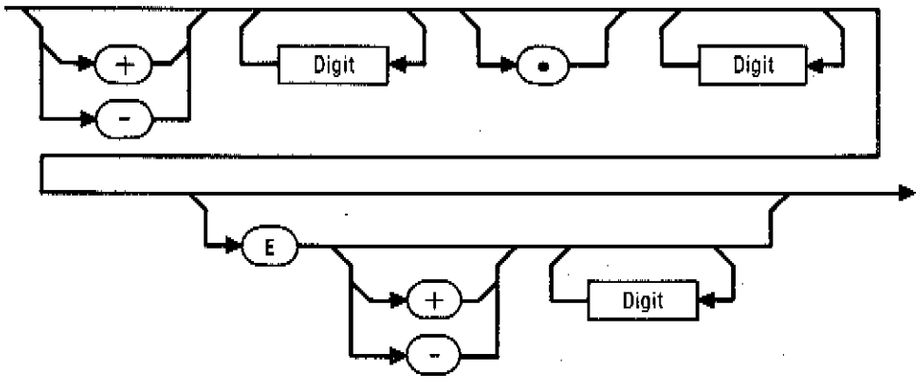

6A-20. As the syntax diagram shows, floating point numeric data can be positive or negative, one or more digits, whole numbers or fractions, and with or without exponential notation.

- Exponential notation is indicated by the character E which may or may not be followed by a sign and one or more digit(s).

  1. E indicates that the numeric data that follows defines the power of 10 which the number preceding E is multiplied by. If no numeric data follows, a zero is assumed.

  2. The sign indicates the sign of the exponent. A +sign or the absence of a sign character indicates a positive exponent. A – sign indicates a negative exponent.

  3. Examples: 1234E3 = 1,234,000
     1234E-3 = 1.234

- While the floating point numeric data seems to allow any arbitrary length, the 6070A and the 6071A round off numeric information that exceeds the available resolution of the function being programmed.

- Other references in this manual: None.

6A-21. COMMAND RECORD NUMERIC

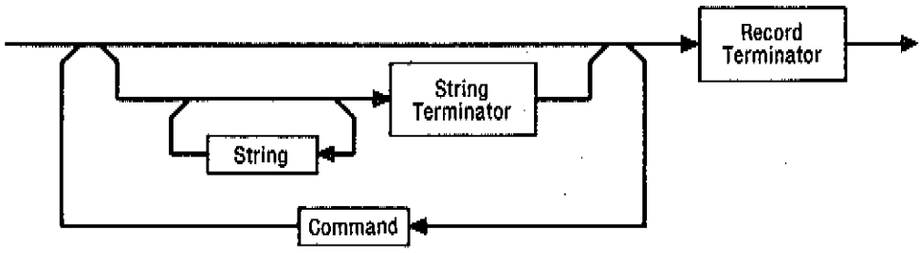

6A-22. As the syntax diagram shows, the command record numeric can be one or more commands which can be separated by string terminators, but which must be terminated with a record terminator.

- The command record numeric accompanies the CT (configure trigger) command.
- Other references in this manual: The CT command in the trigger later in this section.

6A-23. Suffix

6A-24. Suffixes always come at the end of commands. There are seven types of suffixes: frequency, amplitude, FM, ØM, AM, learn string, and DAC designator.

- The frequency suffixes represent different frequency ranges:

SUFFIX	EQUIVALENT UNITS
GZ	gigahertz
MZ	MHz
KZ	kHz
HZ	Hz

- The amplitude suffixes represent ranges of output level:

SUFFIX	EQUIVALENT UNITS
V	volts
MV	millivolts
UV	microvolts
NV	nanovolts
DB	dB(m)

- The FM suffixes represent ranges of frequency deviation:

SUFFIX	EQUIVALENT UNITS
GZ	gigahertz deviation
MZ	MHz deviation
KZ	kHz deviation
HZ	Hz deviation

- The ØM suffix accompanies ØM commands and is always RD (radians).
- The AM suffix accompanies AM commands and is always PC (percent).
- The learn suffix accompanies the LI command. The learn suffix is defined in the Binary Learn Mode information later in this section.
- The DAC designator suffix accompanies the OD Monitor Command. The DAC designator suffix is defined in the OD Command material later in this section.

6A-25. CLEAR COMMANDS -- CB AND CL

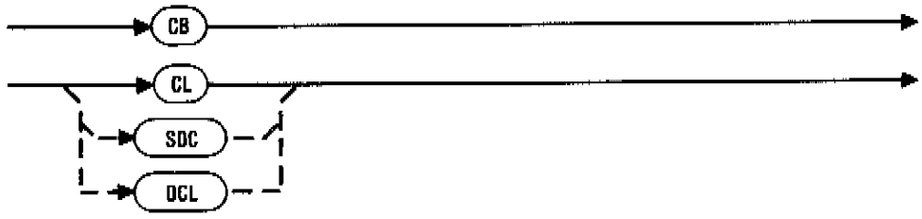

6A-26. There are two clear commands: CB and CL.

- The CB command clears the output buffer.

  1. The instrument output buffer can hold a large amount of data. In order to read that data, the user must know exactly what data has been requested.

  2. The exact contents of the instrument output buffer cannot be verified; clear and request the data again.

  3. Other references in this manual: None.

- The CL command performs seven functions to initialize the instrument.

  1. CL:

     a. Recalls the standard POWER ON setup (even if the instrument has the 607XA-570 Nonvolatile Storage Option installed). The standard POWER ON setup is listed in Section 5E.

     b. Clears the SRQ request.

     c. Resets the SRQ mask to the standard power on SRQ mask.

     d. Clears the IEEE Input Buffer.

     e. Clears the IEEE Output Buffer.

     f. Disables the IEEE-488 Interface Modes selected by the @ command.

     g. Clears the trigger (TR) mode. If a CL command is placed in a CT command string, each time TR is sent, the instrument processes CT until it reaches CL. CL clears the trigger mode so the commands following CL in the CT string is never executed.

  2. Both the 6070A and the 6071A respond equally to the CL command and the IEEE-488 Clear Meta Message (SDC or DCL).

  3. Other references in this manual:

     a. The standard POWER ON setup is listed in Section 5E.

     b. The IEEE-488 Clear Meta Message is defined in Section 6.

     c. Both the SDC and the DCL messages are defined in Section 6.

     d. The TR and CT commands are defined in this section.

6A-27. SRQ COMMANDS -- THE IM AND SM COMMANDS

6A-28. Introduction

6A-29. The IM command interrogates the SRQ mask stored in the instrument. The SM command changes the SRQ mask stored in the instrument. The following paragraphs describe SRQ operation and the IM and SM commands.

6A-30. SRQ Operation

6A-31. The 6070A and the 6071A assert the SRQ bus management line on the IEEE-488 interface bus whenever the instrument requires service in the remote or local states (manual and systems operation). The controller responds with a serial poll message (The controller can clear the SRQ bus management line by sending the clear rsv data message and the user can clear SRQ at the 6070A or 6071A by selecting special function 08.)

6A-32. The 6070A and the 6071A responds to a serial poll operation with a status byte (shown in Figure 6A-2). The bit positions of this byte have the following meanings:

Bit 1 Ready: signifies that the 6070A has finished processing an IEEE command and is ready for the next command.

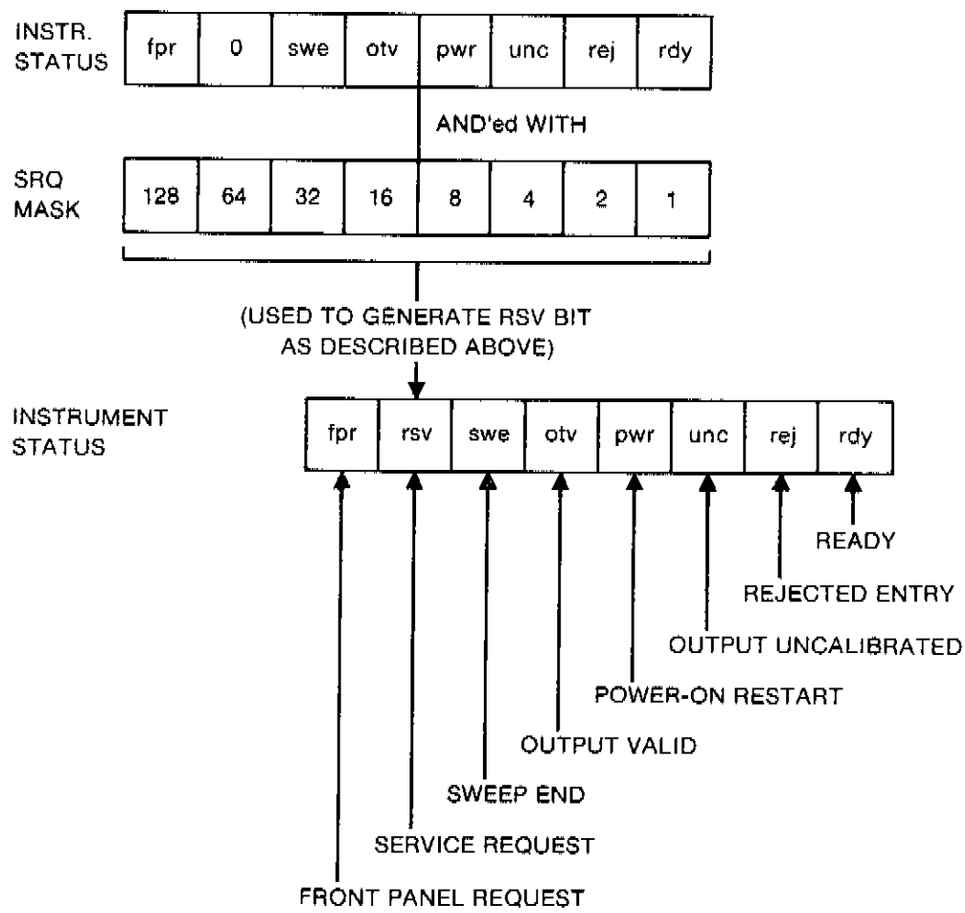

NOTES:

1. *The status byte code assignment is not in accordance with the proposed Fluke standard because the 6070A and 6071A are designed in accordance with existing competative instruments.*
2. *At power-on the status byte mask is as follows: 11000000.*

Figure 6A-2. Serial Poll Status Byte and Mask

Bit 2 Rejected Entry: signifies that either an invalid command string was received or the function cannot be programmed.

Bit 3 Output Uncalibrated: signifies that the 6070A is programmed to a set of conditions which result in an output outside of the guaranteed specification. This could be the result of a violation of a hardware check or the result of a violation of a calculated limit.

Bit 4 Power on Restart: signifies that a power-on sequence was performed.

Bit 5 Output Valid: signifies that the output has settled after a function change.

Bit 6 Sweep End: signifies the end of a sweep cycle.

Bit 7 RQS: Set as described in following paragraphs.

Bit 8 Front panel generated service request (special function 07)

6A-33. The service request mask controls the calculation of the rsv bit which, in turn, is used to control the SRQ line of the IEEE bus. The service request mask can be set using the Set SRQ Mask command (SM followed by an integer within the range of 0 - 255). The current value of the service request mask can be interrogated with the interrogate SRQ mask command (IM).

6A-34. Every time the instrument changes state, the status byte isupdated. From the updated status, a new value for the rsv bit is calculated. (The rsv bit controls the SRQ line of the IEEE-488 interface bus.) The rsv bit is computed as follows:

1. The status byte representing the complete state of the instrument is ANDed with the SRQ mask to obtain the masked status byte.

2. If the new masked status byte is equal to zero, the rsv bit is cleared.

3. If the new masked status has some 1's where the current masked status has 0's, the rsv bit is set to 1 if the corresponding bit position (64) in the SRQ mask is set.

4. If the new masked status is identical to the current status or some 1's went to 0's, rsv is left unchanged.

6A-35. The IM Command

6A-36. The IM command reads the current SRQ mask. Upon receipt of the IM command, the instrument responds with a status message on the IEEE-488 interface.

- The status message is the decimal equivalent of the SRQ mask.

  1. The power-on sequence sets the SRQ mask to 11001000.

     a. The decimal equivalent is 200.

     b. If the instrument has a 607XA-570 Nonvolatile Memory Option installed, the SRQ mask remains unchanged through power-on.

2. The decimal value can be interpreted using Table 6-2.

- Other reference in this manual: None.

6A-37. The SM Command

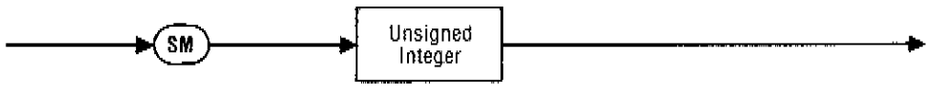

6A-38. The SM command changes the SRQ mask to the binary equivalent of the decimal value sent with the SM command.

- The decimal value can be interpreted by using Table 6-4.

- Other references in this manual: None.

6A-39. IEEE-488 INTERFACE MODES -- THE @ COMMAND

6A-40. The @ command enables or disables the four IEEE-488 Interface Modes. The IEEE-488 Interface modes determine the way in which the 6070A/6071A IEEE-488 Interface processes commands. Each mode is identified by one of the digits: 1, 2, 4, or 8. The unsigned integer in the syntax diagram is the logical sum of the IEEE-488 Interface modes that areto be enabled (all other IEEE-488 Interface Modes are disabled) and can be any digit from 0 through +15. For example, @7 would enable the IEEE-488 Interface modes 1, 2, and 4 and disable IEEE-488 Interface mode 8.

- @0 disables all of the IEEE-488 interface modes.

  1. The CL command also clears all IEEE-488 interface modes.

  2. CL is described earlier in this section.

- @1 selects the alternate record terminator.

  1. ⟨CR⟩ (carriage return) is the alternate record terminator. If @1 is selected, the 6070A/6071A IEEE-488 interface ignores ⟨LF⟩ (linefeed) characters.

  2. ⟨LF⟩ (line feed) is the standard record terminator. If @1 is not selected, the 6070A/6071A IEEE-488 interface ignores ⟨CR⟩ characters.

- @2 enables the record mode.

  1. If the record mode is enabled, the instrument processes IEEE program messages in groups delimited by record terminators. The 6070A or 6071A waits until a record terminator is received before starting to process a group of program messages.

- This mode allows a series of message units (commands) to be built up into one large record and then processed as a whole when the record terminating character is

received. For example, the series of message units 'FR100MZ', 'AP3DB', and 'RO1' could be sent to the 6070A or 6071A at a slow rate over the interface bus without causing any change in the instrument until a record terminator is received. This feature can be used to minimize the amount of time during which the instrument is in a transient state.

2. If the record mode is disabled, the instrument processes program messages without waiting for a record terminating character.

- @4 enables the output valid mode.

  1. If the output valid mode is enabled, the instrument waits until the Output Valid signal is true before starting to process the next program message.

  This mode ensures that the instrument output has stabilized at its current settings before any parameters are allowed to change. If, for example, a series of frequencies are being programmed via the IEEE interface, this mode guarantees that the output stabilizes at every frequency value before proceeding to the next.

  If the output valid mode is disabled, the instrument disregards the state of the Output Valid signal when processing IEEE commands.

- @8 enables the unbuffered mode.

  1. If the unbuffered mode is enabled, the instrument accepts characters as input from the IEEE bus only as the characters are needed for processing commands. No input buffering is performed.

  This mode can be used to synchronize the bus controller with the 6070A or 6071A. In this mode, the 6070A will not handshake a character in from the bus until it is actually needed for processing. This guarantees that the flow of commands on the IEEE bus closely correspond to the rate at which the 6070A or 6071A is processing them.

  2. If the unbuffered mode is disabled, the instrument accepts characters from the IEEE-488 bus whenever there is space in the internal input buffer. This increases efficiency in systems by allowing the 6070A to accept a burst of commands faster than they can be processed, thus freeing the system controller for other work while the 6070A or 6071A is processing its commands.

- Combinations of these modes can be especially useful when the 6070A or 6071A is connected into IEEE-based systems with other instruments.

  1. For example, combining modes 4 and 2 ('@6') cause the 6070A or 6071A to process commands in groups delimited by record terminators and wait for the Output Valid signal before processing each group of commands. (Within a record, the instrument does not pause after each command to wait for the output to become valid; it does so only at the end of the entire record.) Suppose a controller sends a series of amplitude and frequency commands in pairs, with an EOR terminating each pair. The 6070A or 6071A would respond by processing each pair of amplitude and frequency commands together as a unit (record) at the highest possible speed, and then wait for the output to become valid at the new amplitude and frequency before processing the next record. This combination of modes minimizes the period during which the instrument output is in a transient condition and ensures that the output is stable at every desired combination of amplitude and frequency.

2. Combining modes 2, 4, and 8 ('@14') causes the 6070A or 6071A to act as described in the last example, with the additional restriction that a new record will be accepted from the IEEE bus only when the instrument is ready to begin processing it (output transients caused by the previous record must have settled). At this time, the entire record will be accepted at high speed from the IEEE interface until the EOR is received. Then the entire record is processed to completion; the output must be settled before the next record will be accepted. In this combination of modes, the 6070A or 6071A is operating in the unbuffered mode at the record level. This mode of operation synchronizes the operation of the NRFD (Not Ready For Data) IEEE-488 bus handshake line with the 6070A or 6071A output valid status.

- Other references in this manual: Output Valid is described in Section 6.

6A-41. BINARY LEARN MODES -- LI AND LM COMMANDS

6A-42. Introduction

6A-43. Front panel setups are stored in memory in an equivalent binary "image". (The current front panel setup is stored in memory location 99 and is the only setup that contains status data about the RF OUTPUT ON and SWEEP controls). The learn interface binary learn mode allows the instrument to receive binary images of front panel setups from the IEEE-488 interface (LI command). The learn memory binary learn mode allows the instrument to transmit binary images of front panel setups on the IEEE-488 interface (in response to a LM command). The binary learn mode allow the user to minimize the amount of data required to characterize a complete set of instrument functions, to learn the current front panel setup, and to load or dump the instrument memory. The remainder of the binary learn mode information is separated into three major catagories: The LI Command, The LM Command, and Encoding and Decoding the Learn String.

6A-44. The LI Command

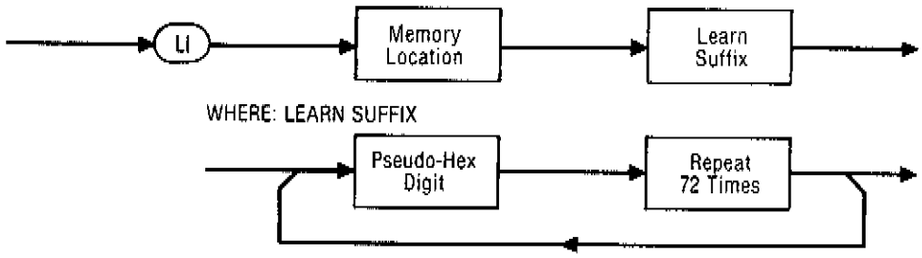

6A-45. The LI command loads a front panel setup into the specified memory location.

- The front panel setup is coded as the learn string.

  1. The entire learn string must be sent without interruption. The LI command generates an error if the string is terminated before 72 ASCII characters with an EOR.

  2. Only ASCII characters A through P are allowed in the learn string. The LI command generates an error if any of the learn string characters are not between A to P, inclusive.

- Memory locations are defined in the Numeric material at the beginning of this section.

- The current front panel setup is at memory location 99. Send LI99 learn string to change the current front panel setup.

- Other references in this manual: Memory operations are described in this section and in Section 5D.

6A-46. The LM Command

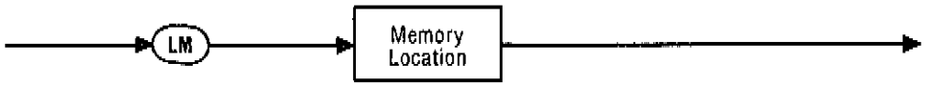

6A-47. Upon receipt of the LM command, the instrument sends a status message on the IEEE-488 interface.

- The status message is the front panel setup stored at the memory location specified by the LM command.

  1. The front panel setup is coded as the learn string.

  2. The instrument terminates the status message with an End Of Record (CR or LF) with EOI asserted.

  3. The entire string will be sent without interruption.

- Memory locations are defined in the suffix material at the beginning of this section.

- The current front panel setup is at memory location 99. Send LM99 to cause the instrument to transmit the current front panel setup.

- Other references in this manual: Memory operations are decribed in this section of the manual and in Section 5D.

6A-48. Encoding and Decoding the Learn String

6A-49. INTRODUCTION

6A-50. The binary images are coded into groups (learn strings) of 72 hexadecimal digits. Hexadecimal digits are defined as ASCII characters A through P (Table 6A-2 lists the hexadecimal and decimal equivalent for each of these ASCII characters).

6A-51. Figure 6A-3 is a sample learn string. As the figure shows, the 72 ASCII characters are separated into 13 individually coded segments. Since most of the code depends upon two complement of a hexadecimal number and conversion between hexadecimal and decimal numbers, the next four paragraphs provide general procedures for these areas. The remainder of the paragraphs describe coding and decoding for each of the 13 segments of the strings. The appropriate portion of the typical string shown in Figure 6A-3 are used as an example in each separate description.

6A-52. CONVERTING FROM DECIMAL TO HEXADECIMAL

6A-53. To convert a decimal number to its hexadecimal equivalent, repeatedly divide the decimal number by 16, setting aside the remainders of each division, until the decimal number can no longer be divided by 16. The hexadecimal equivalent is the remainders arranged from right to left in sequence.

EXAMPLE: Convert the decimal number 127 into its hexadecimal equivalent.

1.
```
      7
  16|127
     112
      15
```

2. But in hexadecimal, 15 = F

3. So, the hexadecimal number is 7F. A check of Table 6-4 shows that a decimal 127 does equal a hexadecimal 7F.

Table 6A-2. Pseudo-Hexadecimal Conversion Table

PSEUDO-HEXADECIMAL ASCII CHARACTER	HEXADECIMAL EQUIVALENT	DECIMAL EQUIVALENT
A	0	0
B	1	1
C	2	2
D	3	3
E	4	4
F	5	5
G	6	6
H	7	7
I	8	8
J	9	9
K	A	10
L	B	11
M	C	12
N	D	13
O	E	14
P	F	15

6A-54. CONVERTING FROM HEXADECIMAL TO DECIMAL

6A-55. To convert a hexadecimal number to its decimal equivalent, multiply the most significant hexadecimal character by 16 and add this product to the next character to the right. If the last character in the number has not been used, multiply the sum by 16 and add the product to the next character on the right. Continue this process until the last character in the number has been added. This final sum is the decimal equivalent of the hexadecimal number.

EXAMPLE #1: Convert the hexadecimal number 7F into its decimal equivalent.

1. $\begin{array}{r} 7 \\ \underline{\times 16} \\ 112 \end{array}$

2. $\begin{array}{r} 112 \\ \underline{+F} \\ 127 \end{array}$ where F is the equivalent of a decimal 15 and F is the last character of the number.

3. This is the reverse of the example used in Converting from Decimal to Hexadecimal.

Sample String BBOBKDAAAAAAAAAAAAAGBKIAFPFOBAAAAAPECEAAPJMAAAABAGEABCMAADCCCBGPA

Char. #1 9 17 25 33 41 45 49 53 57 61 65 69 72

Decoded, the string is as follows:

CHAR. #	ASCII	HEX	FUNCTION	VALUE
1-8	"BBOBKDAA"	11E1A300	Relative Frequency	300.000000 MHz
9-16	"AAAAAAAA"	00000000	Reference Frequency	0 Hz
17-24	"AAAAGBKI"	000061A8	Frequency Step	25.000 KHz
25-32	"AFPFOBAA"	05F5E100	Sweep Width	100.000000 MHz
33-40	"AAAPECEA"	000F4240	Sweep Increment	1.00000000 MHz
41-44	"APJM"	0F9C	Amplitude	-10.0 dBm
45-48	"AAAA"	0000	Relative Amplitude	0
49-52	"BAGE"	1064	Modulation Frequency	1.00 KHz
53-56	"ABCM"	012C	Amplitude Modulation	30.0 %
57-60	"AADC"	0032	Angle Deviation	5.0 KHz
61-64	"CCBG"	2216	Display Status:	
			MODULATION Display	MOD FREQ
			Bright Digit	
			Status	ON
			Actual Location	FREQUENCY Display
			MODULATION Display	1 KHz Position
			FREQUENCY Display	1 MHz Position
			AMPLITUDE Display	1 dBm Position
65-68	"PAAA"	F000	Special Function Status	
			Sweep and RF	Valid only if memory location = 99
			ACFM/DCFM	10
			HI DEV on/off	20
			Fixed Range	30
			Sweep Speed	40
			Sweep Symmetry	50
			Wide Band	60
			Audio Oscillator	70
			Level Correction	80
69,70	"AA"	00	Button Status	
			Relative Frequency	Off
			Relative Amplitude	Off
			Slow Sweep	Off
			DC COUPLED	Off
			INT AM	Off
			INT ØM	Off
			EXT AM	Off
			EXT ØM	Off
71,72	"FB"	51	Checksum	51 Hex

Figure 6A-3. Example Binary Learn String

EXAMPLE #2: Convert the hexadecimal number 186A0 into its decimal equivalent.

1. 1
   x16
   16

2. 16
   +8
   24 and 8 is not the last character in the number.

3. Therefore, 24
   x16
   384

4. 384
   +6
   390 and 6 is not the last character in the number.

5. Therefore, 390
   x16
   6240

6. 6240
   +A where A is the equivalent of a decimal 10.
   6250 and A is not the last character in the number.

7. Therefore, 6250
   x16
   100,000

8. 100,000
   +0
   100,000 and 0 is the last character of the number.

9. Therefore 100,000 is the decimal equivalent of the hexadecimal number 186A0.

6A-56. DETERMINING THE TWOS COMPLEMENT OF HEXADECIMAL NUMBERS

6A-57. Twos complement is a method of expressing negative numbers with the sign indication incorporated into the number. Positive numbers are not altered by the use of the twos complement; only negative numbers are affected by the use of the twos complement. To find the twos complement of a negative hexadecimal number, first add one to the number and then subtract each character of the sum from 15. The resulting number is the twos complement of the negative hexadecimal number.

EXAMPLE #1: Find the twos complement of the hexadecimal number - 234.

1. -234
   +1
   -233

2. 15 15 15
   -2 -3 -3
   13 12 12

3. But 13 is a hexadecimal D and 12 is a hexadecimal C.

4. Therefore, the twos complement of -234 is DDC.

EXAMPLE #2: Find the twos complement of the hexadecimal number +234.

Positive numbers are not affected by twos complement so +234 remains unchanged.

6A-58. DETERMINING THE HEXADECIMAL NUMBER FROM A TWOS COMPLEMENT

6A-59. Since twos complement only affects negative numbers, the first step in determining the hexadecimal number is to find out whether the twos complement represents a positive or a negative number. In the case of the LI and LM strings, convert the ASCII segment into the hexadecimal equivalent using Table 6B-1. If the hexadecimal character at the left end of the segment is 0, 1, 2, 3, 4, 5, 6, or 7, the number is positive. Since the use of the twos complement has no effect on positive numbers, the hexadecimal number is unchanged. If the left hand character is a hexadecimal 8, 9, A, B, C, D, E, or F, the number is negative. To find the negative hexadecimal number, subtract each character of the hexadecimal number from 15 and add one to the resulting number.

EXAMPLE #1: Find the correct hexadecimal number when the equivalent of the ASCII string segment is 000345.

Since the left hand character is a hexadecimal 0, the number is positive, so the correct headecimal number is +345.

EXAMPLE #2: Find the correct hexadecimal number when the equivalent ASCII string segment is FFFA30.

1. Since the left hand character is F, the number is negative.

2. Subtract each character from 15 and then add 1.

15	15	15	15	15	15
-F	-F	-F	-A	-3	-0
0	0	0	5	12	15
					+1
0	0	0	5	12	0
				+1	
0	0	0	5	13	0

4. Since 13 is a hexadecimal D, the number is - 0005D0, or, more correctly, - 5D0.

6A-60. ENCODING/DECODING THE RELATIVE FREQUENCY SEGMENT

6A-61. Characters 1 through 8 (starting from the left) of the learn string contain the relative frequency coded as the pseudo-hexadecimal equivalent of the twos complement of a hexadecimal number. The conversion procedures presented earlier can be used to encode or to decode relative frequency. For example, decode the relative frequency segment of the example learn string shown in Figure 6A-3.

- Characters 1 through 8 are BBOBKDAA.
- According to Table 6A-2, the hexadecimal equivalent of BBOBKDAA is 11E1A300.

- According to the hexadecimal-to-decimal conversion procedure, the decimal equivalent of the hexadecimal number 11E1A300 is 300,000,000.
- Therefore, the relative frequency coded into the example learn string is 300.000000 MHz.

6A-62. ENCODING/DECODING THE REFERENCE FREQUENCY SEGMENT

6A-63. Characters 9 through 16 (starting from the left) of the learn string contain the reference frequency coded as the pseudo-hexadecimal equivalent of the twos complement of a hexadecimal number. The conversion procedures presented earlier can be used to encode or to decode reference frequency. For example, decode the reference frequency segment of the learn string shown in Figure 6A-3.

- Characters 9 through 16 are AAAAAAAA.
- According to Table 6A-2, the hexadecimal equivalent of AAAAAAAA is 00000000.
- The decimal equivalent of the hexadecimal number 00000000 is 00000000.
- Therefore, the reference frequency in the example learn string is zero.

6A-64. ENCODING/DECODING THE FREQUENCY STEP (SIZE) SEGMENT

6A-65. Characters 17 through 24 (starting from the left) of the learn string contain the frequency step size coded as the pseudo-hexadecimal equivalent of the twos complement of a hexadecimal number. The conversion procedures presented earlier can be used to encode or to decode the frequency step size. For example, decode the frequency step segment of the learn string shown in Figure 6A-3.

- Characters 17 through 24 are AAAAGBKI.
- According to Table 6A-2, the hexadecimal equivalent of AAAAGBKI is 000061A8.
- According to the hexadecimal-to-decimal conversion techniques presented earlier, the decimal equivalent of the hexadecimal number 000061A8 is 25000.
- Therefore, the frequency step size in the example learn string is 25.000 kHz.

6A-66. ENCODING/DECODING THE SWEEP WIDTH SEGMENT

6A-67. Characters 25 through 32 (starting from the left) of the learn string contain sweep width coded as the pseudo-hexadecimal equivalent of the twos complement of a hexadecimal number. The conversion procedures described earlier can be used to encode or to decode the sweep width. For example, decode the sweep width segment of the learn string shown in Figure 6A-3.

- Characters 25 through 32 are AFPFOBAA.
- According to Table 6A-2, the hexadeciaml equivalent of AFPFOBAA is 05F5E100.
- According to the hexadecimal-to-decimal conversion procedure, the decimal equivalent of the hexadecimal number 05F5E100 is 100,000,000.
- Therefore, the sweep width in the example learn string is 100.000000 MHz.

6A-68. ENCODING/DECODING THE SWEEP INCREMENT SEGMENT

6A-69. Characters 33 through 40 (starting from the left) of the learn string contain sweep increment coded as the pseudo-hexadecimal equivalent of the twos complement of a hexadecimal number. The conversion procedures presented earlier can be used to encode or to decode the sweep increment. For example, decode the sweep increment segment of the learn string shown in Figure 6A-3.

- Characters 33 through 40 are AAAPECEA.
- According to Table 6A-2, the hexadecimal equivalent of AAAPECEA is 000F4240.
- According to the hexadecimal-to-decimal conversion procedure, the decimal equivalent of the hexadecimal number 000F4240 is 1,000,000.
- Therefore, the sweep increment in the example learn string is 1.000000MHz.

6A-70. ENCODING/DECODING THE AMPLITUDE SEGMENT

6A-71. Characters 41 through 44 (starting from the left) of the learn string contain the amplitude (the amplitude displayed during usual amplitude operation, but stored during relative amplitude operation) coded as a pseudo-hexadecimal number. As Figure 6A-4 shows, the bits of character 41 contain the binary code for the power of ten multiplier while characters 42 through 44 contain the twos complement of the hexadecimal equivalent of the amplitude mantissa. For example, decode the amplitude segment of the learn string shown in Figure 6A-3.

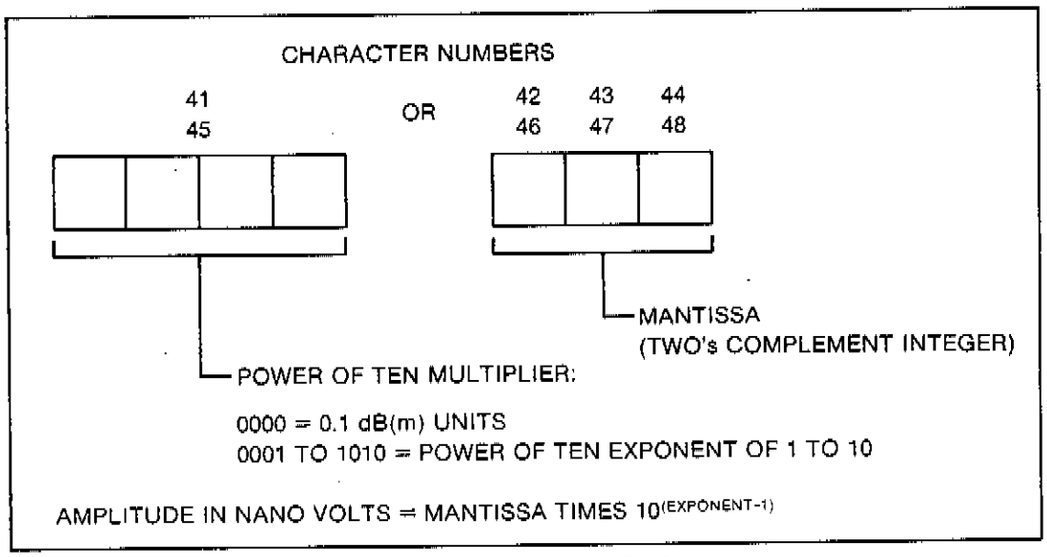

Figure 6A-4. Amplitude Coding

- Character 41 is A and characters 42 through 44 are PJM.
- According to Table 6A-2, the hexadecimal equivalents are:
  1. Character 41 is 0
  2. Characters 42 through 44 are F9C.

- The binary equivalent of chracter 41 is 0000; therefore the multiplier is .1 dB(m).
- According to the decimal-to-hexadecimal conversion procedure, the decimal equivalent of the hexadecimal number F9C is -100.
- Therefore, the amplitude segment of the example learn string is -10.0 dB(m).

6A-72. ENCODING/DECODING THE RELATIVE AMPLITUDE SEGMENT

6A-73. Characters 45 through 48 (starting from the left) of the learn string contain the relative amplitude (the amplitude displayed during relative amplitude operation) coded in a pseudo-hexadecimal number. As Figure 6-4 shows, the bits of character 45 contain the code for the power of 10 while characters 46 through 48 contain the twos complement of the hexadecimal equivalent of the relative amplitude mantissa. For example, decode the relative amplitude segment of the learn string shown in Figure 6A-4.

- Character 45 is A and characters 46 through 48 are AAA.
- According to Table 6A-2, the hexadecimal equivalents are:
  1. Character 45 is a hexadecimal 0, so the units are 0.1 dB(m).
  2. Characters 46 through 48 are 000. The decimal equivalent is also 000.
- Therefore, the relative amplitude segment of the example learn string is zero.

6A-74. ENCODING/DECODING THE MODULATION FREQUENCY SEGMENT

6A-75. Characters 49 through 52 (starting from the left) of the learn string contain the modulation frequency. As Figure 6A-5 shows, the bits of character 49 indicate the power of 10 multiplier while characters 50 through 52 contain the pseudo hexadecimal equivalent of the modulation frequency mantissa expressed in twos complement of a heaxdeciaml number. For example, decode the modulation frequency segment of the learn string shown in Figure 6A-3.

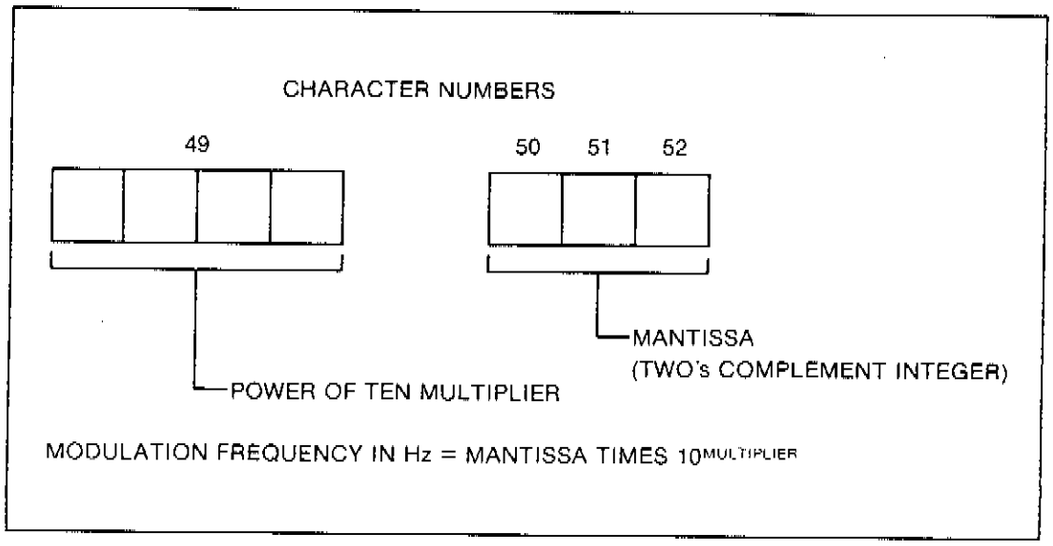

Figure 6A-5. Modulation Frequency Coding

- Character 49 through 52 are BAGE.
- According to Table 6A-2, the hexadecimal equivalent is 1064.
- Character 49 is a hexadecimal 1. The binary equivalent is 0001, so the power of ten multiplier is 1.
- According to the hexadecimal-to-decimal conversion procedure, characters 50 through 52, which are a hexadecimal 064, are equal to the decimal number 100.
- Therefore, the modulation frequency segment of the example learn string is 1.00 kHz.

6A-76. ENCODING/DECODING THE AM SEGMENT

6A-77. Characters 53 through 56 (starting from the left) of the learn string contain a pseudo-hexadecimal number which is the equivalent of the twos complement of the hexadecimal value of AM in units of 0.1%. For example, decode the AM segment of the learn string shown in Figure 6A-3.

- Characters 53 through 56 are ABCM.
- According to Table 6A-2, the hexadecimal equivalent of ABCM is 012C.
- According to the hexadecimal-to-decimal conversion procedure, the decimal equivalent of the hexadecimal number 012C is 300.
- Therefore, the AM segment of the example learn string is 30.0%.

6A-78. ENCODING/DECODING THE ANGLE DEVIATION SEGMENT

6A-79. Characters 57 through 60 (starting from the left) of the learn string contain a pseudo-hexadecimal number which is the equivalent of angle deviation (FM or ØM). The first bit of character 57 indicates whether the angle deviation in the learn string is FM or 0M. As Figure 6A-6 shows, the other three bits of character 57 and characters 58 through 60 contain the twos complement of the hexadecimal number equivalent to angle deviation. FM is expressed in units of 0.1 kHz DEV while ØM is expressed in units of 0.01 radians. For example, decode the angle deviation segment of the learn string shown in Figure 6A-3.

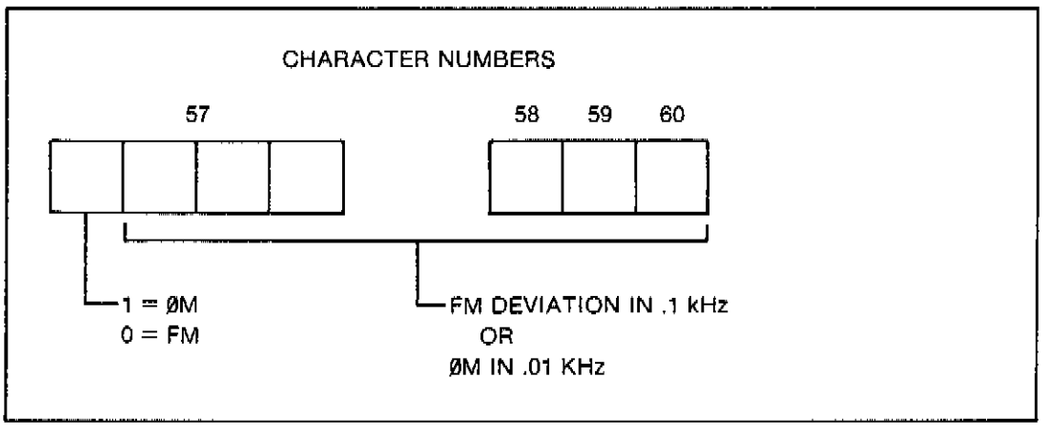

Figure 6A-6. Angle Modulation Coding

- Characters 57 through 60 are AADC.
- According to Table 6A-2, the hexadecimal equivalent of AADC is 0032.
- Character 57 is 0, so the bits are 0000. The angle deviation is FM and the first character is a hexadecimal 0.
- Therefore, the hexadecimal value of angle deviation is 032.
- According to the hexadecimal-to-decimal conversion procedure, the decimal equivalent of the hexadecimal number 032 is 50.
- Therefore, the angle modulation segment of the example learn string is 5.0 kHz DEV.

6A-80. ENCODING/DECODING THE DISPLAY STATUS SEGMENT

6A-81. Characters 61 through 64 of the learn string contain a pseudo-hexadecimal number that is the twos comlement of the hexadecimal equivalent of the display status message expressed in binary. Figure 6A-7 shows the bit assignment interpretation for the display status message. For example, decode the display status message segment of the learn string shown in Figure 6A-3.

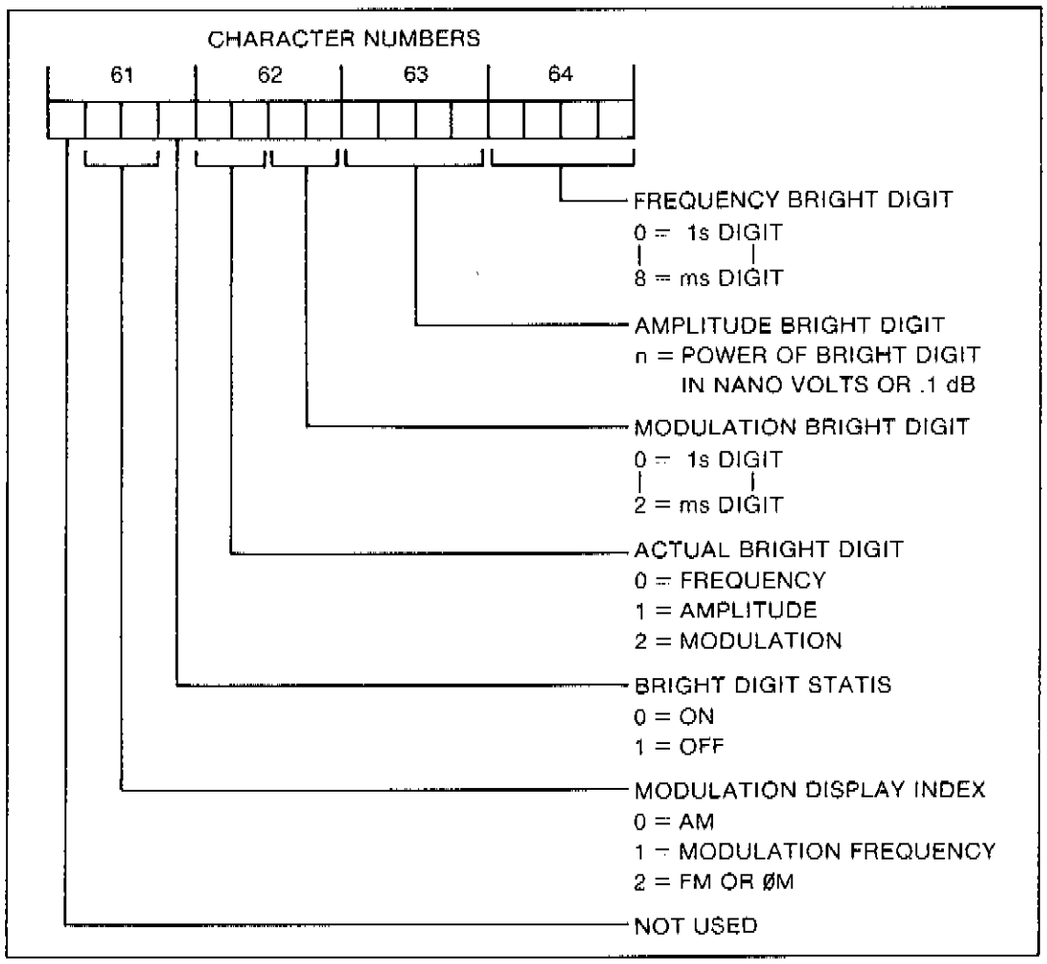

Figure 6A-7. Instrument Display Status Message Coding

- Characters 61 through 64 are CCBG.
- According to Table 6A-2, the hexadecimal equivalent of CCBG is 2216.
- According to Table 6-1, the binary equivalent of the hexadecimal number 2216 is 0010 0010 0001 0110.
- Therefore, the display status is as follows:

  1. MODULATION Display is MOD FREQ
  2. The Bright Digit is on.
  3. The Bright Digit is actually displayed in the FREQUENCY Display.
  4. The Bright Digit position of the MODULATION Display is 1 kHz.
  5. The Bright Digit position of the AMPLITUDE Display is 1 dBm.
  6. The Bright Digit position of the FREQUENCY Display is 1 MHz.

6A-82. ENCODING/DECODING THE SPECIAL FUNCTION SEGMENT

6A-83. Characters 65 through 68 (starting from the left) contain a pseudo-hexadecimal number that is the equivalent of the twos complement of the hexadecimal number representing the status of the instrument special functions and the RF OUTPUT ON and SWEEP controls. Figure 6A-8 shows thebit coding assignment for the four characters. The RF OUTPUT ON and SWEEP control indications are valid only if the learn string memory location is 99 (current front panel setup). If the learn string memory location is any value other than 99, all 1's will be loaded into the bits that indicate the status of the RF OUTPUT ON and SWEEP controls (the first hexadecimal number will be F if all 1's are loaded into these bits, but this does not indicate a negative number). For example, decode the special function segment of the learn string shown in Figure 6A-3.

- Characters 65 through 68 are PAAA.
- According to Table 6A-2, the hexadecimal equivalent of PAAA is F000. Since the fisrt character is F, the memory location number for this learn string is some number other than 99 (99 is the current front panel setup memory location).
- The binary equivalent of a hexadecimal 000 is 0000 0000 0000.
- Therefore, the special functions selected are as follows: 10,20,30,40,50,60,70, and 80.

6A-84. ENCODING/DECODING THE INSTRUMENT STATUS SEGMENT

6A-85. Characters 69 through 72 of the learn string contain the instrument status messsage. Characters 69 and 70 form a pseudo-hexadecimal number that is the equivalent of the twos complement of a hexadecimal number. Figure 6A-9 shows the bit assignment of that hexadecimal number. Characters 71 and 72 form a pseudo-hexadecimal number that is the twos complement of the hexadecimal number equivalent to the checksum results. For example, decode the instrument status message in the learn string shown in Figure 6A-3.

- Characters 69 through 72 are AAFB.

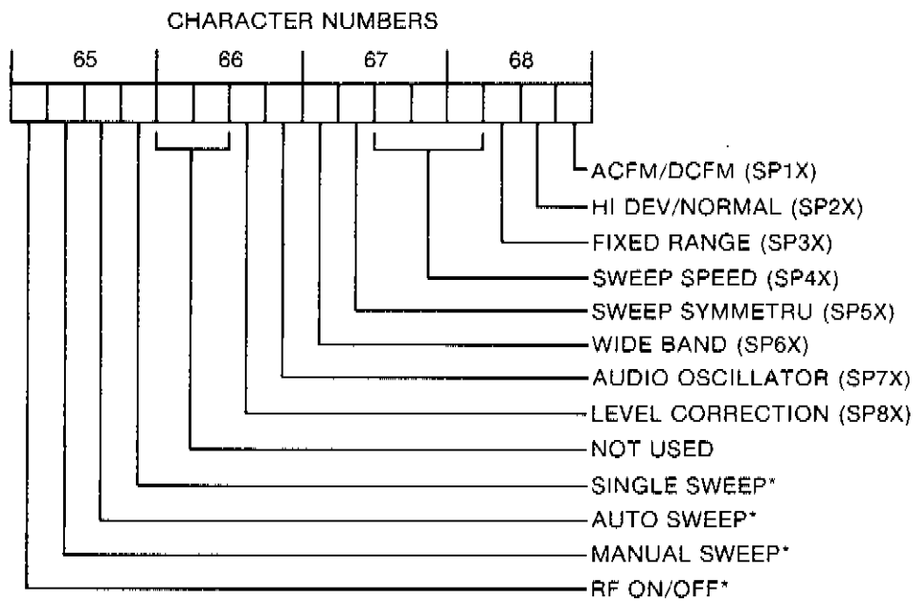

* *These bits have the indicated SWEEP and RF OUTPUT ON meanings only when memory location is 99. The sweep and RF information is not stored in memory and in all other learn memory commands, these four bits of the response are all set to one's to indicate that there is no valid information contained.*

Figure 6A-8. Special Function Coding

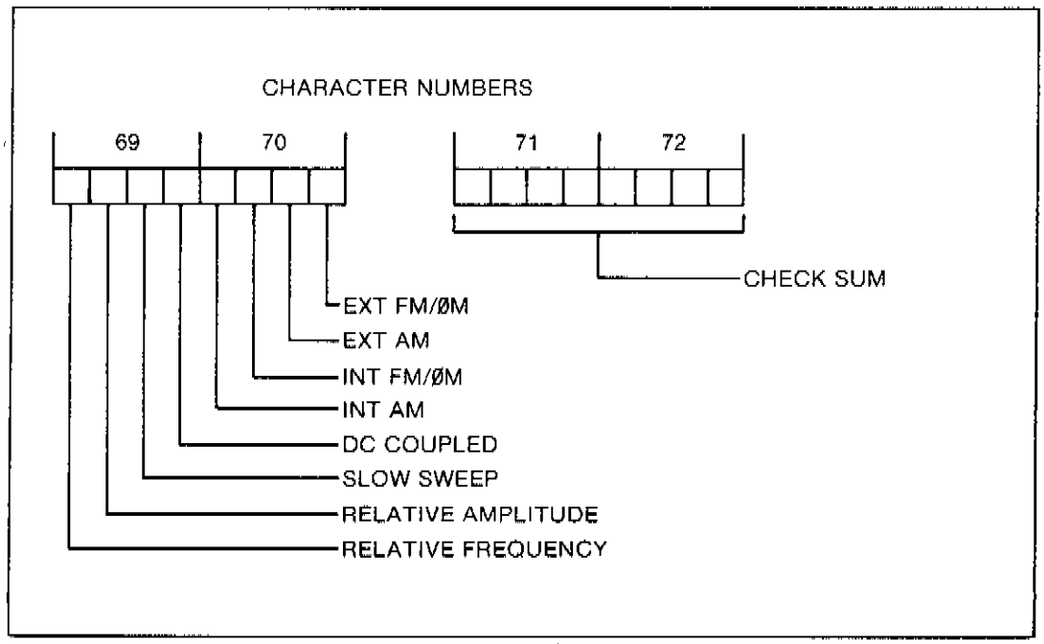

Figure 6A-9. Instrument Status Message Coding

- According to Table 6A-2, the hexadecimal equivalent of AAFB is 0051.
- Characters 69 and 70 are a hexadecimal 00, so the binary equivalent is 0000 0000. Therefore, REL FREQ, REL AMPL, SLOW SWEEP, and all MODULATION controls are off.
- Characters 71 and 72 are 51, so the checksum is a hexadecimal 51.

6A-86. TRIGGER -- CT AND TR COMMANDS

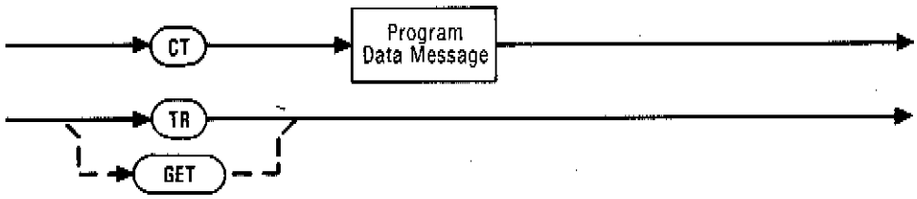

6A-87. There are two 6070A/6071A trigger commands: CT and TR. CT defines a command record numeric. The instrument executes the command record numeric each time TR is received.

- The CT command message must be 72 characters or less.

  1. CT is used to configure the TR command.

  The command record numeric must end with a record terminator.

  3. The command record numeric is defined in the Numeric material at the beginning of this section.

  Once CT has been sent, TR may be used to repeatedly execute the program data message.

- The instrument responds equally to TR and the IEEE-488 interface message GET.
- Other references in this manual: The GET message is defined in Section 6.

6A-88. INTERROGATE -- THE IM, IO, IR, IT, IU, AND IV COMMANDS

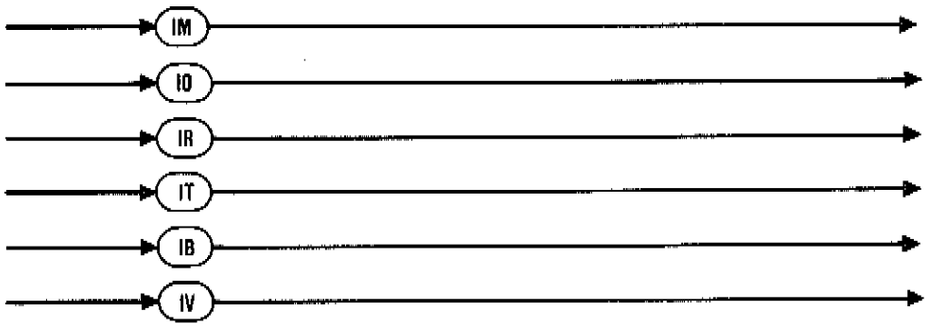

6A-89. There are six interrogate commands: IM, IO, IR, IT, IU, and IV.

- IM interrogates the SRQ mask. IM is defined in the SRQ material earlier in this section.

- IO interrogates the option loading. Upon receipt of the IO command, the instrument responds, on the IEEE-488 interface, with a status message. The status message has the format: d1,d2,d3, where:

  1. d1 = 0 means that the instrument is a 6070A.
     d1 = 1 means that the instrument is a 6071A.

  2. d2 indicates the 607XA-570 Nonvolatile Storage Option loading:

  d2 = 0 means the option is not installed.
  d2 = 1 means the option is installed.

  3. d3 indicates the 607XA-870 Reverse Power Protection Option is loading:

     d3 = 0 means that the option is not installed.
     d3 = 1 means that the option is installed.

- IR interrogates the instrument rejected entry error codes (IR duplicates the function of the front panel INTERROGATE control when the REJ ENT annunciator is on or flashing.)

  1. The instrument responds, on the IEEE-488 interface, with a status message having the following format:

     AAA,BBB,CCC,DDD EOR

  2. This status message can be decoded using Figure 5E-3 (Section 5E). The displays shown in the figure and the status message characters have the following correlation:

     AAA = MODULATION Display
     BBB = Left side of the FREQUENCY Display
     CCC = Right side of the FREQUENCY Display
     DDD = AMPLITUDE Display

- IT interrogates the results of the instrument self tests. The self tests are performed automatically during the power-on sequence and are performed individually when special functions 03 through 06 are selected (special functions are selected by sending the 6070A/6071A SP command or performing a front panel entry).

  1. The instrument responds with a status message having the format SSSSS.

  2. This status message can be decoded using Table 5E-1 (Section 5E). The status message characters SSSSS are equivalent to the AMPLITUDE Display digits in the table.

- IU interrogates the instrument uncal error codes (IU duplicates the function of the front panel INTERROGATE control when the UNCAL annunciator is on or flashing).

  1. The instrument responds, on the IEEE-488 interface, with a status message having the following format:

     AAA,BBB,CCC,DDD EOR

2. This status message can be decoded using Figure 5E-4 (Section 5E). The displays shown in the figure and the status message characters have the following correlation:

AAA = MODULATION Display
BBB = Left side of the FREQUENCY Display
CCC = Right side of the FREQUENCY Display
DDD = AMPLITUDE Display

- IV interrogates the instrument software version number. Upon receipt of the IV command, the instrument responds with a status message which defines the version number of the software installed in the instrument.

  1. The status message format is: Vxx.x⟨EOR⟩ or Vx.x⟨EOR⟩ , where x is an unsigned integer and ⟨EOR⟩ is a record terminator (LF, or CR, and EOI).

  2. Examples: The status message for software version 1.0 is V1.0.

- Other references in this manual:

  1. The function of the INTERROGATE control is described in Section 4.

  2. Rejected entry and uncal operation is described in Section 5E.

  3. Rejected entry error codes can be interpreted using Figure 5E-3.

  4. Uncal error codes can be interpreted using Figure 5E-4.

  5. Self test error codes can be interpreted using Table 5E-1.

6A-90. REL FREQ CONTROL EQUIVALENT -- THE RF COMMAND

6A-91. The RF command duplicates the function of the front panel REL FREQ control.

- RF1 enables relative frequency operation (REL FREQ control lit).
- RF0 disables relative frequency operation (REL FREQ control dark).
- Other references in this manual:

  1. The REL FREQ control is described in Section 4.

  2. Relative frequency operation is described in Section 5A.

6A-92. REL AMPL CONTROL EQUIVALENT -- THE RA COMMAND

6A-93. The RA command duplicates the function of the front panel REL AMPL control.

- RA1 enables relative amplitude operation (REL AMPL control lit).
- RA0 disables relative amplitude operation (REL AMPL control dark).
- Other references in this manual:
  1. The REL AMPL control is described in Section 4.
  2. Relative amplitude operation is described in Section 5B.

6A-94. RF OUTPUT CONTROL EQUIVALENT -- THE RO COMMAND

6A-95. The RO command duplicates the function of the front panel RF OUTPUT ON control.

- RO1 causes the instrument to apply the RF output signal to the RF OUTPUT connector (RF OUTPUT ON control lit).
- RO0 causes the instrument to remove the RF output signal from the RF OUTPUT connector (RF OUTPUT ON control dark).
- Other references in this manual: The RF OUTPUT ON control is described in Section 4.

6A-96. FUNCTION CONTROLS EQUIVALENTS -- THE FUNCTION COMMANDS

6A-97. Introduction

6A-98. The 6070A/6071A Function Commands are equivalent to the front panel FUNCTION controls. In addition to a header, Function Commands always have a numeric or a suffix or a numeric and a suffix. The numerics and the suffixes are defined in the Numeric and Suffix material near the beginning of this section.

6A-99. AM FUNCTION Control Equivalent -- The AM Command

6A-100. The AM command duplicates the function of the AM FUNCTION control. Upon receipt of the AM command, the instrument reprograms AM to the specified value.

- AM commands sent without the units suffix are rejected. Units are always in percent. The code for percent units is PC.
- The numeric field is a floating point value. Floating point values are defined in the numeric material at the beginning of this section.

- Programmed AM is not used until internal AM is enabled. Internal AM is enabled by sending the 6070A/6071A Modulation Command AI or by pressing the front panel INT AM MODULATION control so that it is lit.

- Other references in this manual:

  1. AM operation is described in Section 5C.

  2. Programming AM using the front panel AM FUNCTION control is described in Section 5C.

  3. Enabling internal AM using the front panel INT AM MODULATION control is described in Section 5C.

  4. Enabling internal AM using the 6070A/6071A Modulation Command AI is described in this section.

6A-101. AMPL FUNCTION Control Equivalent -- The AP Command

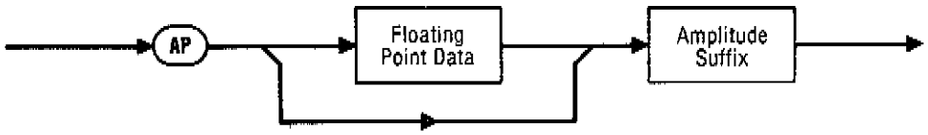

6A-102. The AP command duplicates the function of the front panel AMPL FUNCTION control. Upon receipt of the AP command, the instrument reprograms units and, if included, numerics to the value(s) specified by the AP command.

- AP commands sent without the units suffix are rejected.

  1. If the numeric field is sent with the AP command, amplitude is completely reprogrammed.

  2. If the numeric field is left out (null), only the units of the AMPLITUDE Display field are changed.

  3. Suffixes are defined in the suffix material at the beginning of this section.

- The numeric is expressed as a floating point value. Numerics are defined in the numerics material at the beginning of this section.

- Other references in this manual:

  1. Amplitude operations are described in Section 5B.

  2. Programming amplitude using the AMPL FUNCTION control is described in Section 5B.

  3. The AMPL FUNCTION control is described in Section 4.

  4. Relative amplitude operation is described in Section 5B. The front panel REL AMPL control or the 6070A/6071A Command RA can be used to enter or exit relative amplitude operation.

a. Use of the RA command to enter and exit relative amplitude operation is described in this section.

b. Use of the front panel REL AMPL control to enter and exit relative amplitude operation is described in Section 5B.

6A-103. FREQ FUNCTION Control Equivalent -- The FR Command

6A-104. The FR command duplicates the function of the FREQ FUNCTION control. Upon receipt of the FR command, the instrument reprograms frequency.

- An FR command sent without a numeric or a units suffix is rejected. Suffixes are defined in the Suffix material at the beginning of this section.
- The numeric field is a floating point number. Floating point numbers are defined in the Numerics material at the beginning of this section.
- Other references in this manual:

  1. Frequency operations are described in Section 5A.

  2. Programming frequency using the FREQ FUNCTION control is described in Section 5A.

  3. The FREQ FUNCTION control is described in Section 4.

  4. Relative frequency operation is described in Section 5A. Relative frequency operation can be enabled and disabled using the front panel REL FREQ control or the 6070A/6071A Relative Frequency Command RF.

     a. Use of the REL FREQ control is described in Section 5A.

     b. Use of the RF command is described in this section.

6A-105. FM ØM FUNCTION Control Equivalent -- The FM Command

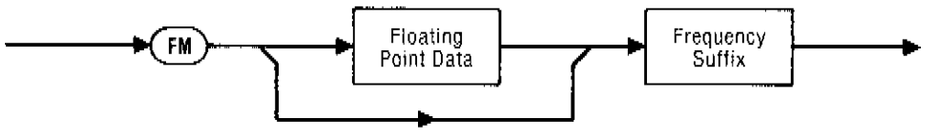

6A-106. The FM command duplicates the functions of the front panel FM ØM FUNCTION control. Upon receipt of the FM command, the instrument will reprogram either FM deviation or ØM deviation, depending upon the specified units. If the units suffix is RD (radians), ØM deviation is reprogrammed. If the units suffix is GZ, MZ, KZ, or HZ, FM deviation is reprogrammed.

- FM entries without a units suffix are rejected.

1. If a numeric accompanies the FM command, angle deviation is reprogrammed.

2. If only the suffix accompanies the FM command, only the units of the appropriate angle deviation display field change. This type of entry is rejected if external FM is enabled (FM 0M MODULATION control lit).

3. Suffixes are defined in the Suffix material at the beginning of this section.

- The numeric is expressed as a floating point value. Numerics are defined in the Numeric material at the beginning of this section.

- Other references in this manual:

  1. Angle modulation operation is described in Section 5C.

  2. Programming angle deviation using the FM ØM FUNCTION control is described in Section 5C.

  3. The FM 0M FUNCTION control is described in Section 4.

6A-107. FREQ STEP FUNCTION Control Equivalent -- The FS Command

6A-108. The FS command duplicates the function of the front panel SHIFT FUNCTION and FREQ STEP FUNCTION controls. Upon receipt of the FS command, the instrument reprograms the size of the frequency step to the values specified by the FS command.

- FS commands sent without the units suffix are rejected. The units suffixes are defined in the Suffix material at the beginning of this section.

- The numeric field is a floating point number. Floating point values are defined in the Numeric material at the beginning of this section.

- The FS command only programs the size of the frequency step. The front panel FREQ STEP controls or the 6070A/6071A Commands SD and SU cause the displayed values to actually increment or decrement.

- Other references in this manual:

  1. Frequency step operations are described in Section 5A.

  2. Use of the front panel FREQ STEP controls to program frequency step size is described in Section 5A.

  3. Use of the SD and SU commands to decrement or increment frequency is described in this section.

6A-109. MOD FREQ FUNCTION Control Equivalent -- The MF Command

6A-110. The MF command duplicates the function of the front panel MOD FREQ FUNCTION control. Upon receipt of the MF command, the instrument attempts to reprogram the modulation frequency to the value specified by the MF command.

- MF commands sent without the units suffix are rejected. Suffixes are defined in the suffix material at the beginning of this section.
- The numeric field is a floating point value. Floating point values are defined in the numeric material at the beginning of this section.
- Other reference in this manual:

  1. Modulation frequency operations are described in Section 5C.

  2. The MOD FREQ FUNCTION control is described in Section 4.

  3. Use of the MOD FREQ FUNCTION control to program the modulation frequency is described in Section 5C.

6A-111. SWP INCR FUNCTION Control Equivalent -- The SI Command

6A-112. The SI command duplicates the function of the frontpanel SHIFT FUNCTION and SWP INCR FUNCTION controls. Upon receipt of the SI command, the instrument reprograms the size of the sweep increment to the value specified by the SI command.

- SI commands sent without the units suffix are rejected. Suffixes are defined in the Suffix material at the beginning of this section.
- The numeric is expressed as a floating point value. Floating point values are defined in the numeric material at the beginning of this section.
- Other references in this manual:

  1. Use of the front panel SHIFT FUNCTION and SWP INCR controls to program the size of the sweep increment are described in Section 5A.

  2. Sweep operations are described in this section and in Section 5A.

6A-113. SHIFT FUNCTION Control Equivalent -- The SP Command

6A-114. The SP command duplicates the Special Function selection function of the front panel SHIFT FUNCTION control. Upon receipt of the SP command, the instrument selects the Special Function indicated by the SP command numeric.

- Special Functions are described and listed in Section 5E.
- The numeric is expressed as an unsigned integer. Unsigned integers are defined in the Numeric material at the beginning of this section.
- The SP command does not have a suffix.
- Other references in this manual: None.

6A-115. SWP WDTH FUNCTION Control Equivalent -- The SW Command

6A-116. The SW command duplicates the function of the SHIFT FUNCTION and SWP WDTH FUNCTION controls. Upon receipt of the SW command, the instrument reprograms the sweep width to the value specified by the SW command.

- SW commands sent without the units suffix are rejected. The units suffix is described in the Suffix material at the beginning of this section.
- The numeric is expressed as a floating point value. Floating point values are defined in the numeric material at the beginning of this section.
- Other references in this manual:

  1. Sweep operation is described in Section 5A.
  2. The SWP WDTH FUNCTION control is described in Section 4.
  3. Use of the SHIFT FUNCTION and SWP WDTH FUNCTION controls to program sweep width is described in Section 5A.

6A-117. FREQ STEP CONTROL EQUIVALENTS -- THE SD AND SU COMMANDS

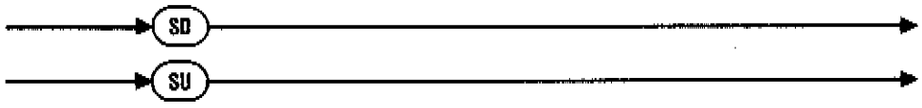

6A-118. The SD and SU commands duplicate the functions of the front panel FREQ STEP controls.

- SD causes the instrument to decrement displayed frequency by one frequency step.
- SU causes the isntrument to increment displayed frequency by one frequency step.
- Frequency step size is programmed either by the 6070A/6071A command FS or by the front panel FREQ STEP FUNCTION control sequence.

- Other references in this manual:

  1. The FREQ STEP controls are described in Section 4.

  2. FREQ STEP operation is described in Section 5A.

  3. Programming frequency step size using the front panel FREQ STEP FUNCTION control sequence is described in Section 5A.

  4. Programming frequency step size using the 6070A/6071A command FS is described in this section.

6A-119. MEMORY CONTROL EQUIVALENTS -- THE MEMORY COMMANDS

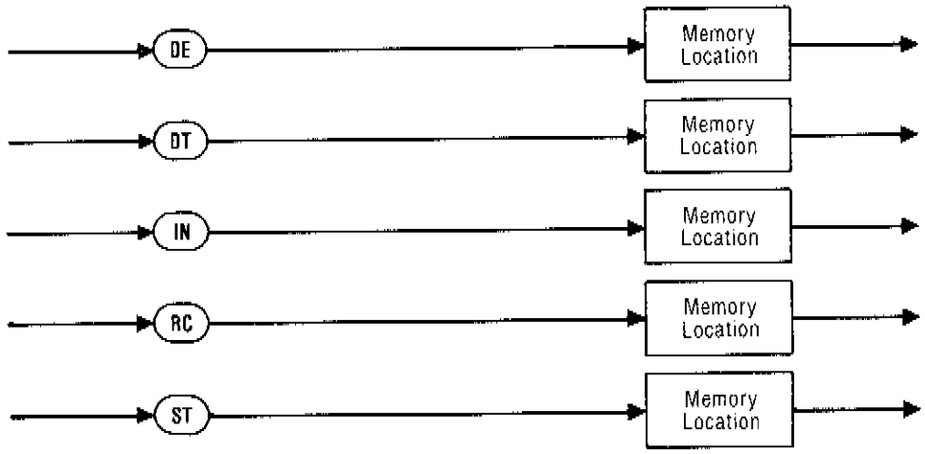

6A-120. The 6070A/6071A Memory Commands duplicate the functions of the front panel MEMORY controls.

- The memory location numeric is defined in the numeric material near the beginning of this section.

- The DE command duplicates the function of the DELETE MEMORY control. Upon receipt of the DE command, the instrument moves the contents of the specified memory location to memory location 00 and deletes the contents of the specified memory location.

- The DT command duplicates the function of the TOP MEMORY control. The instrument defines the specified memory location as the TOP memory location upon receipt of the DT command.

- The IN command duplicates the function of the INSERT MEMORY control. Upon receipt of the IN command, the instrument inserts the current front panel setup in the next position above (one numerical count greater than) the specified memory location, moves the contents of each higher memory location up one location until TOP is reached, and stores the last front panel setup moved into memory location 0.

- The RC command duplicates the function of the RECALL MEMORY control. Upon receipt of the RC command, the instrument stores the current front panel setup in memory location 00 and recalls the front panel setup stored in the specified memory location.

- The ST command duplicates the function of the STORE MEMORY control. Upon receipt of the ST command, the instrument stores the current front panel setup in the specified memory location and moves the front panel setup that was in the specified location to memory location 00.

- Other references in this manual:

  1. The memory location suffixes are described at the beginning of this section.

  2. The front panel MEMORY controls are described in Section 4.

  3. Memory operations are described in detail in Section 5D.

6A-121. EDIT CONTROL EQUIVALENTS -- THE EDIT COMMANDS

6A-122. Introduction

6A-123. The edit commands duplicate the function of the front panel EDIT controls.

- The BO command duplicates the function of the EDIT OFF control. The instrument disables the edit controls (Bright Digit disappears) upon receipt of the BO command.

- The remainder of the edit commands can be separated by function into two groups: commands that position the Bright Digit and commands that edit the Bright Digit.

  1. Commands AB, FB, DB, MB, and PB position the Bright Digit.

  2. Commands KA, KF, KD, KM, KP, and KB edit the Bright Digit.

- All of the edit commands, except BO, use floating point values. Floating point values are defined at the beginning of this section.

- Fixed range operation can be enabled or disabled via special functions using the 6070A/6071A Function Commands or the front panel FUNCTION controls.

  1. Special function operations using the 6070A/6071A Function Controls are described in this section.

  2. Special function operations using the front panel FUNCTION controls are described in Section 5E.

- Other references in this manual: Edit operations are described in Sections 5, 5A, 5B, and 5C.

6A-124. Edit Commands that Position the Bright Digit

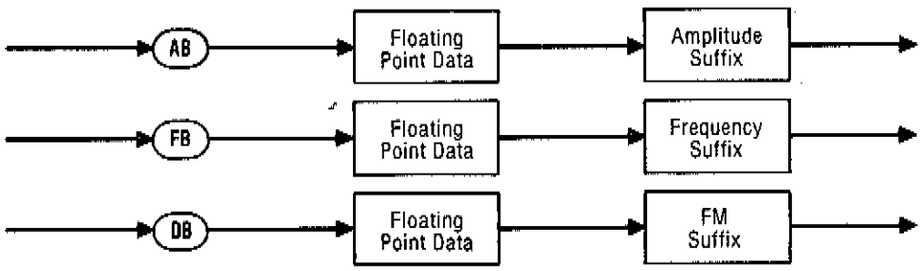

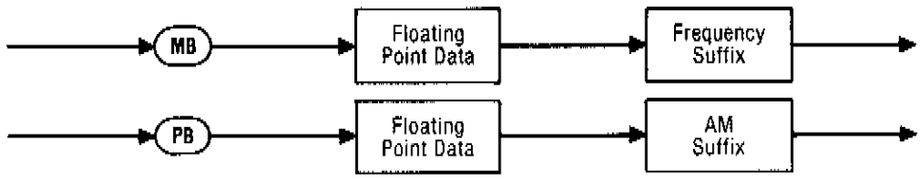

6A-125. The Edit Commands AB, FB, DB, MB, and PB duplicate the function of the AMPL EDIT, FREQ EDIT, MOD EDIT, and DIGIT controls. These commands position the Bright Digit in the appropriate display at the decimal position defined by the resolution and units portions of the commands.

- The AB command duplicates the function of the AMPL EDIT control. The Bright Digit appears in the AMPLITUDE Display at the specified resolution and units upon receipt of the AB command.

  1. Resolution is expressed as a floating point value.

  2. Unit is one of the four following codes:

CODE	UNITS
V	volts
MV	millivolts
UV	microvolts
DB	dB or dBm

- The FB command duplicates the function of the FREQ EDIT control. The Bright Digit appears in the FREQUENCY Display at the resolution and units specified upon receipt of the FB command.

  1. Resolution is expressed as a floating point value.

  2. Unit is one of the following codes:

CODE	UNITS
GZ	gigahertz
MZ	MHz
KZ	kHz
HZ	Hz

- The DB, MB, and PB commands duplicate the function of the EDIT MOD control.

  1. The Bright Digit appears in the MODULATION Display for angle modulation at the resolution and units specified upon receipt of the DB command.

     a. Resolution is expressed as a floating point value.

     b. Unit is one of the following codes:

CODE	UNITS
GZ	gigahertz
MZ	MHz
KZ	kHz
HZ	Hz

2. The Bright Digit appears in the MODULATION Display for modulation frequency at the resolution and units specified upon receipt of the MB command.

a. Resolution is expressed as a floating point value.

b. Unit is one of the following codes:

CODE	UNITS
GZ	gigahertz
MZ	MHz
KZ	kHz
HZ	Hz

3. The Bright Digit appears in the MODULATION Display for AM at the resolution and units specified upon receipt of the PB command.

a. Resolution is expressed as a floating point value.

b. Units must be PC.

6A-126. Edit Commands That Edit the Bright Digit

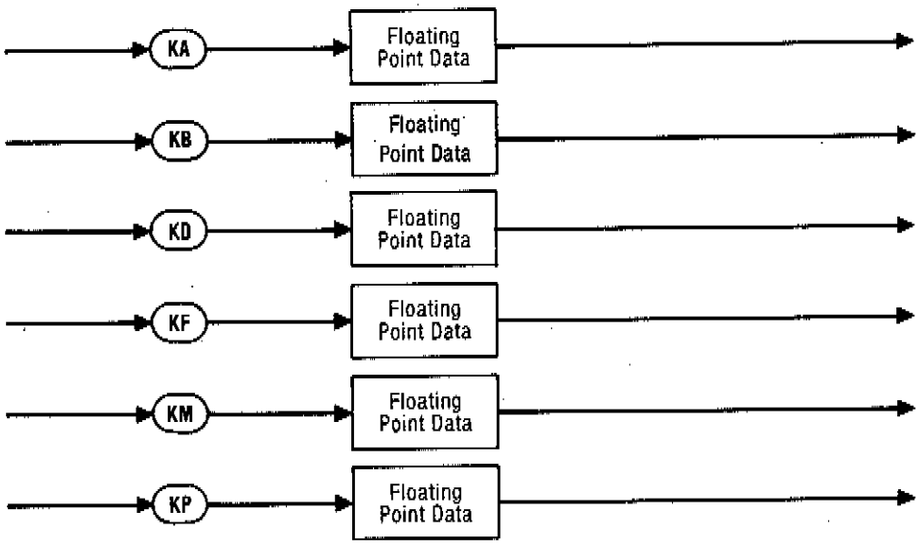

6A-127. These commands duplicate the function of the Edit Knob. Unlike the Edit Knob, however, the Bright Digit does not have to be in the display field edited. The Bright Digit will be moved to the field being edited. The edit value is in floating decimal format.

- The KA command increments or decrements the AMPLITUDE Display field by the specified value.

- The KB command increments or decrements the Edit Knob field by the specified value.

  1. KB can be used to increment or decrement in the display field of the current Bright Digit.

  2. KB can be used to adjust frequency during MANUAL sweep operation.

- The KD command increments or decrements the MODULATION Display field by the specified value for angle modulation.
- The KF command increments or decrements the FREQUENCY Display field by the specified value.
- The KM command increments or decrements the MODULATION Display field by the specified value for modulation frequency.
- The KP command increments or decrements the MODULATION Display field by the specified value for AM.

6A-128. MODULATION CONTROL EQUIVALENTS -- THE MODULATION COMMANDS

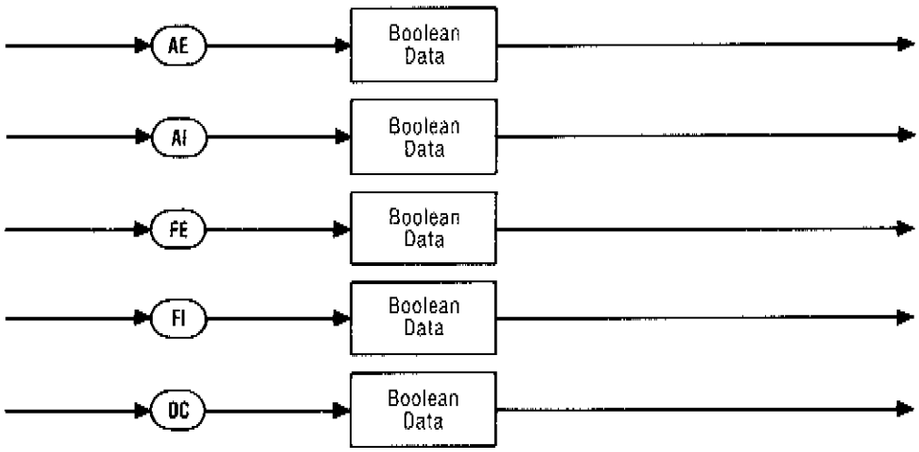

6A-129. The modulation commands duplicate the function of the front panel MODULATION controls. The syntax diagram shows the modulation commands for duplicating each MODULATION control function.

- Modulation parameters; modulation frequency, AM depth, and FM, ØM deviation; can be programmed using the 6070A/6071A Function Commands or the front panel FUNCTION controls.
- Other references in this manual:

  1. Modulation operations are described in Section 5C.

  2. Programming the modulation parameters using the 6070A/6071A Function Commands is described in this section.

  3. Programming the modulation parameters using the front panel FUNCTION controls is described in Section 5C.

6A-130. SWEEP CONTROLS EQUIVALENTS

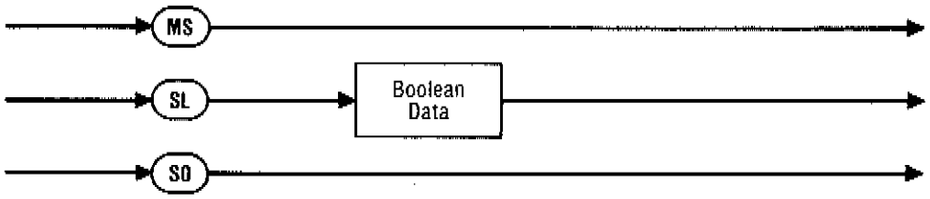

6A-131. The sweep commands duplicate the function of the front panel SWEEP controls.

- The AS command duplicates the function of the AUTO SWEEP control. The instrument begins auto sweep operation upon receipt of the AS command.

- The SS command duplicates the function of the SINGLE SWEEP control. The instrument begins single sweep operation upon receipt of the SS command.

- The MS command duplicates the function of the MANUAL SWEEP control. The instrument begins MANUAL sweep operation upon receipt of the MS command (MANUAL SWEEP control lit).

- The SL command duplicates the function of the SLOW SWEEP control.

  1. If the Boolean value sent with SL is 1, the instrument enables slow sweep operation (SLOW SWEEP control lit).

  2. If the Boolean value sent with SL is 0, the instrument disables slow sweep operation (SLOW SWEEP control dark).

- The SO command duplicates the function of the OFF SWEEP control. The instrument disables all sweep operation upon receipt of the SO command.

- Other references in this manual:

  1. Sweep operations are described in Section 5A.

  2. Other sweep parameters (asymmetrical or symmetrical sweep, sweep width, sweep increment, and sweep speed) can be programmed using the 6070A/6071A Function Commands or the front panel FUNCTION controls.

     a. 6070A/6071A Function Command programming is described in this section.

     b. Front panel FUNCTION control programming is described in Section 5A.

6A-132. MONITOR COMMAND

6A-133. Introduction

6A-134. The eight monitor commands, intended for troubleshooting and maintenance procedures, are defined in detail in the 6070A/6071A Service Manual. These commands can be used to read and modify the contents of the program RAMs and individual I/O port bits. Many of the monitor commands require a memory address. Memory address and contents can be stated as a decimal or as a hexadecimal value. Values stated as hexadecimal numbers are preceded by an X. For example, decimal 100 can be stated in hexadecimal as X64.

6A-135. Read Memory Word and Byte -- The RW and RB Commands

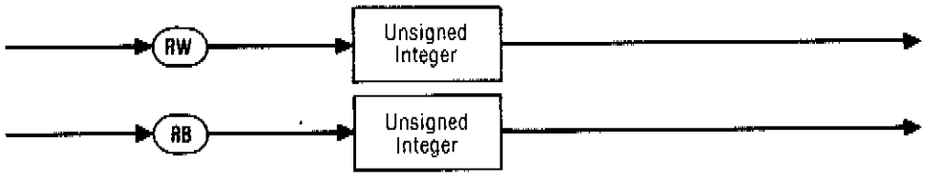

6A-136. The RW and RB commands read the contents of a specific 6070A or 6071A memory location word (RW) or byte (RB).

- Memory location can be stated as a decimal or hexadecimal value. Hexadecimal values are preceded by an X.
- When addressed as a talker, the instrument responds with a status message on the IEEE-488 interface. The status message is the contents of the specified memory location expressed with the same radix as the memory location sent with the RW or RB command.
- Other references in this manual: None
- Other references: Use of the RW and RB commands is described in the 6070A/6071A Service Manual.

6A-137. The following example illustrates common use of decimal and hexadecimal values with the RW command. Note that both the memory location and the response is the same for decimal and hexadecimal. RB command usage is identical.

	Command	Status Message
Decimal	RW16	00082
Hexadecimal	RWX10	X0052

6A-138. Write Memory Word and Byte -- The DW, WW, and WB Commands

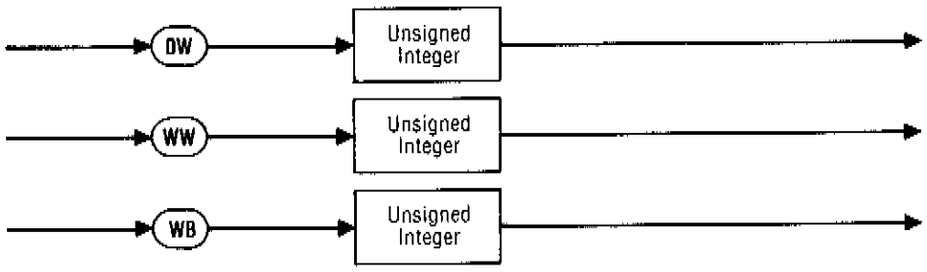

6A-139. The DW command specifies the 6070A/6071A memory location into which data will be written. The WW and WB commands write data into the specified 6070A/6071A memory location word (WW) or byte (WB).

- The instrument must recieve DW before either WW or WB.
- Memory location and data can be expressed in decimal or hexadecimal numbers. Hexadecimal values are preceded by an X.

- Other references in this manual: None.
- Other references: Use of the DW, WW, and WB conmands is described in the 6070A/6071A Service Manual.

6A-140. The following example illustrates common use of DW and WB. Note that the memory location is the same in both the decimal and the hexadecimal commands. Use of DW and WW is identical.

	Command	Result
Hexadecimal	DWX8010,WBO	Zeros are written into byte memory location 8010 (hexadecimal).
Decimal	DW32784,WB0	Zeros are written into byte memory location 32784 (decimal).

6A-141. Read I/O Port Bit -- The IB Command

6A-142. The IB command reads the state of the addressed I/O port bit.

- The I/O port address can be stated in decimal or hexadecimal. Hexadecimal values are preceded by an X.
- When addressed as a talker, the instrument responds with a status message on the IEEE-488 interface.

  1. The status message is a 1 or a 0 depending upon the state of the addressed I/O port bit.

  2. The status message is always decimal, never hexadecimal. (The status message is never preceded by an X).
- Other references in this manual: None.
- Other references: Use of the IB command is described in the 6070A/6071A Service Manual.

6A-143. The following example illustrates the use of the IB command.

Command	Status Message	Comments
IBX1E0	1	The I/O port bit 1E0 (hexadecimal) is set.

6A-144. Modifying a Single I/O Port Bit -- The DO and OB Commands

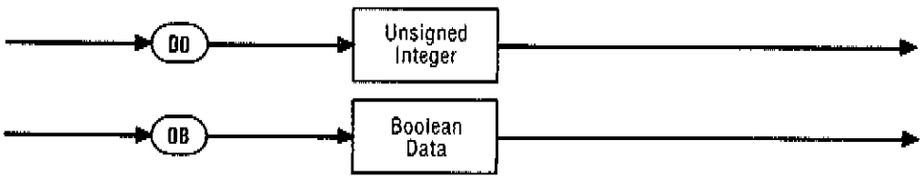

6A-145. DO addresses the I/O port bit that is to be modified. OB specifies the new value of the addressed I/O port bit.

- The instrument must receive DO before OB.
- The I/O port address sent with DO can be stated in decimal or hexadecimal. Hexadecimal values are preceded by an X.
- The OB bit value can be a 1 or a 0. This bit value can only be decimal, never hexadecimal. (The bit value is never be preceded by an X).
- Other references in this manual: None.
- Other references: Use of the DO and OB commands is described in the 6070A/6071A Service Manual.

6A-146. The following example illustrates common use of the DO and OB commands.

Commands	Comments
DOX1E0,OB1	I/O port bit 1E0 (hexadecimal) is changed to 1.

6A-147. Modifying a Group of Bits -- The DO, OC, and OM Commands

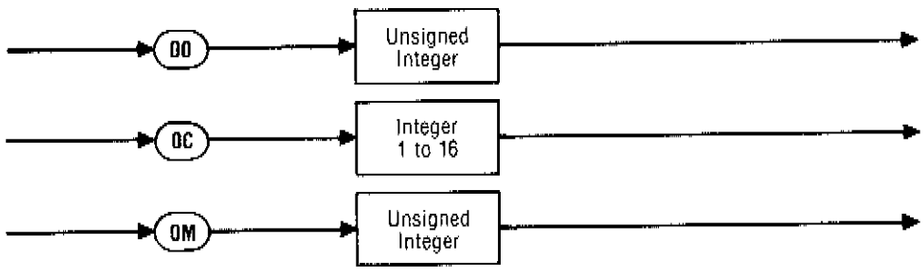

6A-148. The DO, OC, and OM commands can be used to modify groups of one to 16 bits. The DO command addresses a specific I/O port bit. The OC command specifies a bit count (from 1 to 16, inclusively). The OM command states the value to be loaded into the I/O port bits specified by the DO and OC commands.

- There is a specific sequence in which the instrument must receive the three commands:

  1. The instrument must receive the DO command first.
  2. The instrument must receive the OC command second.
  3. The instrument must receive the OM command last.

- The I/O port address sent with the DO command can be stated in decimal or hexadecimal. Hexadecimal numbers are preceded by an X.
- The bit count sent with the OC command can be any number from 1 to 16, inclusive.
- The value specified by the OM command must fit within the specified field width. The example that follows illustrates this constraint.

- The values specified by the 'DO' and 'OC' commands remain in effect until explicitly changed.
- The function of the DO, OC, and OM command sequence can be performed by the OD command for commonly used groups of bits.
- Other references in this manual: Modifying the Contents of Select DACS -- The OD Command.
- Other references: Use of the DO, OC, and OM commands is described in the 6070A/6071A Service Manual.

6A-149. The following example illustrates common use of the DO, OC, and OM commands.

Command	Comments
DOX1E0,OC4,OM15	15 is loaded into a 4-bit field starting at address 1E0.

6A-150. Modifying the Contents of Select DACs-- The OD Command

6A-151. The OD command changes the contents of commonly used DAC (digital-to-analog converters). While the contents of these DACs could be modified using the DO, OC, and OM command sequence, the OD command simplifies the process.

- The DAC value sent with the OD command must be within the range of positive integers which will fit into the DAC addressed.
- The DAC value may be specified in decimal or in hexadecimal. Hexadecimal values are preceded by an X.
- The DAC designator is a pair of letters with the following meaning:

DAC	Specified DAC designator
AM	AM depth
AT	Attenuators and 6 dB Amp
CL	Cleanup Loop Compensation (8 bits)
DR	Delay Discriminator Range (4 bits)
FM	FM Deviation
HR	Het range (6 bits)
KN	KN
KV	KV
LE	Level
MF	Modulation Frequency
NI	NI
PI	pi Bits
PH	PH
PR	Phase Detector Range (5 bits)
SW	Sweep Output

- Other references in this manual: Modifying a Group of Bits -- The DO, OC, And OM Commands.

- Other references: Use of the OD command is described in the 6070A/6071AService Manual.

6A-152. The following example illustrates common use of the OD command.

Command	Results
OD5000SW	The sweep output DAC is set to half scale (5000 millivolts).

6A-153. Read the Current Value of Attenuation -- The XA Command

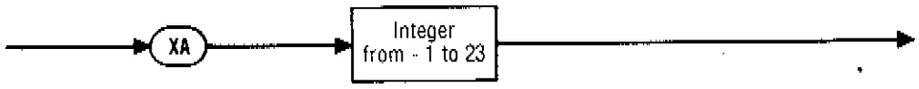

6A-154. The XA command reads the current value of attenuation in multiples of 6 dB.

- After the XA command is received, the instrument responds with a status message when addressed as a talker.

  1. The status message is an integer in the range of -1 to 23.

  2. The status message represents the multiple of 6 dB attenuation currently selected within the instrument. For example, the status message -1 indicates that the current attenuation value is -6 dB.

- The XA command is the functional complement of the XB command.

- Other references in this manual: Change the Value of Attenuation -- The XB Command.

- Other references: Use of the XA command is described in the 6070A/6071A Service Manual (presented later in this section).

6A-155. The following example illustrates common use of the XA command.

Command	Status Message	Comments
XA	-1	The current value of attenuation is -6 dB.

6A-156. Change the Value of Attenuation -- The XB Command

6A-157. The XB command sets the attenuator pattern to 6 dB times that specified by the floating point numeric data.

- The floating point numeric data can be any integer in the range of -1 and 23. The integer represents the multiple of 6 dB attenuation selected.

- XB is the functional complement of the XA command.

- Other references in this manual: Read the Current Value of Attenuation -- The XA Command.
- Other references: Use of the XB command is described in the 6070A/6071A Service Manual.

6A-158. The following example illustrates common use of the XB command.

Command	Comments
XB-1	The attenuator pattern is set up so that the RF output signal is attenuated -6 dB.

6A-159. Change the Frequency Hardware Directly -- The XD Command

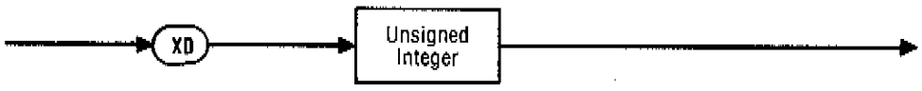

6A-160. The XD command sets the frequency hardware directly.

- Only the N/1 and the subsynthesizer are affected by this command.
- Offsets are not taken into account.
- Band settings, DACs, etc. are not taken into account.
- The frequency clock is toggled once the BCD hardware has been loaded.
- Other references in this manual: None.
- Other references: Use of the XD command is described in the 6070A/6071A Service Manual.

6A-161. Local-Operation-Alert Interrupt Mode -- The XF Command

6A-162. The XF command enables or disables the local-operation-alert interrupt mode, depending upon the value of the Boolean numeric data.

- Send a Boolean value 0 to disable the mode.
- Send a Boolean value 1 to enable the mode.
- The local-operation-alert interrupt mode generates the equivalent of SP07 (Special Function 07, set SRQ) on the IEEE-488 interface each time a front panel entry is performed.

  1. This notifies any device on the IEEE-488 interface bus that the instrument setup may not be the last condition programmed via the IEEE-488 interface.

  2. Any device on the IEEE-488 interface can send a LM99 (Learn the contents of memory location 99) to learn the current front panel setup.

- Other references in this manual: The learn memory material presented earlier in this section.

6A-163. Mod/Divider RF On/Off -- The XR Command

6A-164. The XR command turns the MOD/DIVIDER RF on and off.

- The value of the Boolean numeric data determines whether the command turns the MOD/DIVIDER RF on or off.

  1. Send a Boolean value of 0 to turn the MOD/DIVIDER RF off.

  2. Send a Boolean value of 1 to turn the MOD/DIVIDER RF on.

- Other references in this manual: None.

- Other references: Use of the XR command is described in the 6070A/6071A Service Manual.

6A-165. PROGRAMMING EXAMPLES

6A-166. Figures 6A-10, 6A-11, and 6A-12 show simple programming examples.

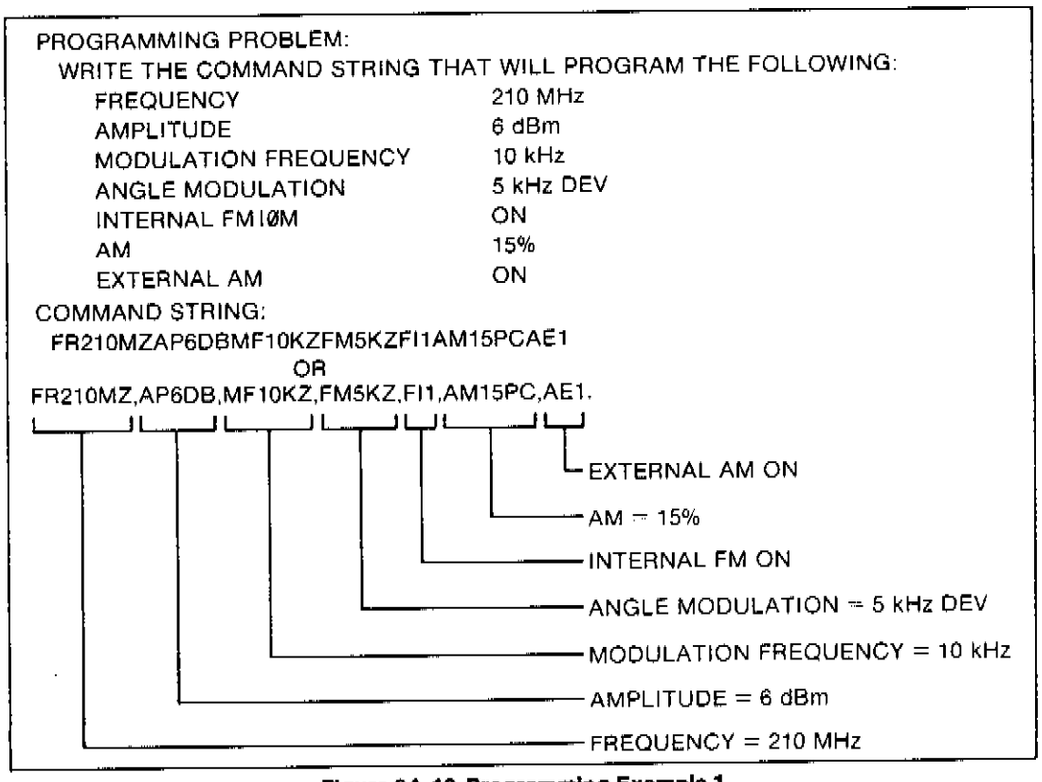

Figure 6A-10. Programming Example 1

PROGRAMMING PROBLEM:
WRITE THE COMMAND STRING THAT WILL AUTOMATICALLY SWEEP FREQUENCY FROM 25 MHz TO 325 MHz IN 10 MHz STEPS.

COMMAND STRING:
FR25MZSW300MZSI10MZSP51AS
OR
FR25MZ,SW300MZ,SI10MZ,SP51,AS.

- AS — AUTO SWEEP ON
- SP51 — ASYMMETRICAL SWEEP (SPECIAL FUNCTION 51)
- SI10MZ — SWEEP INCREMENT = 10 MHz
- SW300MZ — SWEEP WIDTH = 300 MHz
- FR25MZ — START FREQUENCY = 25 MHz

Figure 6A-11. Programming Example 2

PROGRAMMING PROBLEM:
WRITE THE COMMAND STRING THAT WILL CAUSE THE INSTRUMENT TO PROGRAM THE FOLLOWING INSTRUMENT PARAMETERS EACH TIME THE TR (TRIGGER) MESSAGE IS RECEIVED.

FREQUENCY	210 MHz
AMPLITUDE	6 dBm
MODULATION FREQUENCY	10 kHz
ANGLE MODULATION	5 kHz DEV
INTERNAL FM 0M	ON
AM	15%
EXTERNAL AM	ON

COMMAND STRING:
CTFR210MZAP6DBMF10KZFM5KZFI1AM15PCAE1 ⟨LF⟩

- ⟨LF⟩ — RECORD TERMINATOR*
- FR210MZAP6DBMF10KZFM5KZFI1AM15PCAE1 — SAME AS PROGRAMMING EXAMPLE 1
- CT — CONFIGURE TRIGGER

** If the Alternate Record Terminator IEEE-488 Interface Mode is enabled (@1), then the Record Terminator will be CR.*

Figure 6A-12. Programming Example 3

Section 6B
6070A/6071A IEEE-488 Interface Bus Message Syntax

6B-1. INTRODUCTION

6B-2. The information in this section defines all IEEE-488 interface bus messages that have meaning to the 6070A and the 6071A. The message syntax used is a subset of the general syntax in the IEEE Recommended Practice Code and Format Conventions, Revision F, February 1979.

6B-3. While this information describes the syntax of the 6070A/6071A IEEE-488 interface messages, it does not define the sematics of the 6070A/6071A IEEE-488 interface language. (The information defines correctly stated messages, but does not define whether the statements are meaningful to the 6070A or the 6071A). For example, while the information in this section shows that the message MF -500 HZ is syntactially correct (the message satisfies the criteria for a correctly formatted modulation frequency message), the message is semantically meaningless because negative modulation frequencies do not exist.

6B-4. The information in this section is divided into two parts: the 6070A/6071A IEEE-488 Interface Bus Message Syntax Definition Conventions and the 6070A/6071A IEEE-488 Interface Bus Message Syntax Listing.

6B-5. 6070A/6071A INTERFACE BUS MESSAGE SYNTAX DEFINITION CONVENTIONS

6B-6. Introduction

6B-7. The 6070A/6071A Interface Bus Message Syntax Definition Conventions consist of the 6070A/6071A IEEE-488 Interface Character Set, the Notational Conventions, and the General Structure of the 6070A/6071A Device Dependent Messages.

6B-8. 6070A/6071A IEEE-488 Interface Character Set

6B-9. The 6070A and the 6071A ignore spaces. Their interface character set is:

1. 0 through 9
2. A through Z
3. a through z
4. @
5. ,
6. ;
7. +
8. -
9. .
10. CR
11. LF

6B-10. Notation Conventions

6B-11. There are seven notation conventions. They are as follows:

1. Lowercase words enclosed in angle brackets (nonterminals) denote syntactic structures (nonterminals) which are composed of tokens (terminals). Nonterminals are intermediate symbols which are defined further by the rules in this section. For example, the nonterminal unsigned integer represents an integer which is composed of the digits (terminals) 0, 1, ..., 9.

2. Uppercase words denote tokens (terminals). These exactly represent the characters which form the terminal. Terminals are symbols which do not require further definition. For example, the terminal for the frequency prefix is the two-character sequence FR.

3. The vertical bar indicates ORed expressions (A|B means A or B).

4. Spaces separating terminals or nonterminals mean "followed by" (A B means A followed by B).

5. Curly braces mean "zero or more instances" ({A B} means zero or more instances of the sequence A followed by B).

6. Quantities within square brackets are optional ([A B] is either not required or means A followed by B).

7. There is an implicit priority among operators. The grouping operators, {} and [] have the highest priority. They are followed by concatenantion (linking notation such as a "followed by" space), and then the vertical bar (Q|R {S} means either Q or else R followed by zero or more instances of S).

6B-12. General Structure of the 6070A/6071A Device Dependent Messages

6B-13. The 6070A/6071A Device Dependent Messages follow the general structure: ⟨HR⟩ [⟨NR⟩] [⟨suffix⟩] [⟨SR⟩] where:

1. ⟨HR⟩ is the header field.

2. ⟨NR⟩ is the argument (usually numeric).

3. ⟨suffix⟩ is the units field information.

4. ⟨SR⟩ is the message string terminator or the message record terminator (The SR field is considered as being separate from the main message unit itself and is used by the 6070A and the 6071A to differentiate between IEEE message levels).

6B-14. 6070A/6071A IEEE-488 INTERFACE BUS MESSAGE SYNTAX LISTING

6B-15. The 6070A/6071A IEEE-488 Interface Bus Message Syntax is defined in the following list:

⟨6070A IEEE message⟩ = ⟨remote message⟩ | ⟨local message⟩.

⟨remote message⟩ = ⟨device-dependent message⟩
| ⟨interface message⟩.

⟨device dependent message⟩ = ⟨program data message⟩ | ⟨status message⟩.

```
⟨program data
 message⟩          = { ⟨command⟩ | ⟨string⟩ } ⟨record terminator⟩.

⟨string⟩           = { ⟨command⟩ } ⟨string terminator⟩.

⟨command⟩          = ⟨interface mode command⟩
                   | ⟨function command⟩
                   | ⟨modulation on/off command⟩
                   | ⟨ memory command⟩
                   | ⟨frequency step command⟩
                   | ⟨edit knob command⟩
                   | ⟨sweep on/off command⟩
                   | ⟨rf output command⟩
                   | ⟨relative frequency/amplitude command⟩
                   | ⟨interrogate command⟩
                   | ⟨learn command⟩
                   | ⟨srq control command⟩
                   | ⟨trigger control command⟩
                   | ⟨clear command⟩
                   | ⟨monitor command⟩.

⟨interface mode
 command⟩          = @ ⟨unsigned integer⟩.

⟨function command⟩ = AM ⟨floating point value⟩  ⟨am suffix⟩
                   | AP ⟨floating point value⟩  ⟨amplitude suffix⟩
                   | AP ⟨amplitude suffix⟩
                   | FM ⟨floating point value⟩  ⟨fm suffix⟩
                   | FM ⟨fm suffix⟩
                   | FR ⟨floating point value⟩  ⟨frequency suffix⟩
                   | FS ⟨floating point value⟩  ⟨frequency suffix⟩
                   | MF ⟨floating point value⟩  ⟨frequency suffix⟩
                   | SI ⟨floating point value⟩  ⟨frequency suffix⟩
                   | SP ⟨unsigned integer⟩
                   | SW ⟨floating point value⟩  ⟨frequency suffix⟩.

⟨modulation on/off
 command⟩          = AE ⟨boolean value⟩
                   | AI ⟨boolean value⟩
                   | DC ⟨boolean value⟩
                   | FE ⟨boolean value⟩
                   | FI ⟨boolean value⟩.

⟨memory command⟩   = DE ⟨memory location⟩
                   | DT ⟨memory location⟩
                   | IN ⟨memory location⟩
                   | RC ⟨memory location⟩
                   | ST ⟨memory location⟩.

⟨frequency step
 command⟩          = SD | SU.

⟨edit knob command⟩ = AB ⟨floating point value⟩  ⟨amplitude suffix⟩
                    | BO
                    | DB ⟨floating point value⟩  ⟨fm suffix⟩
```

```
                          | FB ⟨floating point value⟩  ⟨frequency suffix⟩
                          | KA ⟨floating point value⟩
                          | KB ⟨floating point value⟩
                          | KD ⟨floating point value⟩
                          | KF ⟨floating point value⟩
                          | KM ⟨floating point value⟩
                          | KP ⟨floating point value⟩
                          | MB ⟨floating point value⟩  ⟨frequency suffix⟩
                          | PB ⟨floating point value⟩  ⟨am suffix⟩.
⟨sweep on/off
command⟩                = AS
                          | MS
                          | SL ⟨boolean value⟩
                          | SO
                          | SS.

⟨rf output command⟩     = RO ⟨boolean value⟩.

⟨relative frequency/
 amplitude command⟩     = RA ⟨boolean value⟩
                          | RF ⟨boolean value⟩.

⟨interrogate
 command⟩               = IR | IT | IU.

⟨learn command⟩         = LI ⟨memory location⟩  ⟨learn suffix⟩
                          | LM ⟨memory location⟩.

⟨srq control
 command⟩               = IM
                          | SM ⟨unsigned integer⟩
                          | XF ⟨boolean value⟩.

⟨trigger control
command⟩                = CT ⟨program data message⟩
                          | TR.

⟨clear command⟩         = CB | CL.

⟨monitor command⟩       = DO ⟨unsigned integer⟩
                          DW ⟨unsigned integer⟩
                          IB ⟨unsigned integer⟩
                          OB ⟨boolean value⟩
                          OC ⟨unsigned integer⟩
                          OD ⟨unsigned integer⟩  ⟨dac designator⟩
                          OM ⟨unsigned integer⟩
                          RB ⟨unsigned integer⟩
                          RW ⟨unsigned integer⟩
                          WB ⟨unsigned integer⟩
                          WW ⟨unsigned integer⟩
                          XA
                          XB ⟨floating point value⟩
                          XD ⟨floating point value⟩  ⟨frequency suffix⟩
                          XR ⟨boolean value⟩.
```

⟨floating point value⟩ = [+|-] {⟨digit⟩} [.] {⟨digit⟩} [E [+ | -] {⟨digit⟩}].

NOTE

At least one terminal must be present in the floating point representation - it may not be completely null. One character is sufficient. Thus 0, 0.0, E, +, +E, are all legal floating point representations of zero.

⟨memory location⟩ = ⟨unsigned integer⟩ | NU | ND | TP.

⟨unsigned integer⟩ = ⟨digit⟩ {⟨digit⟩} | X {⟨hex digit⟩}.

⟨hex digit⟩ = ⟨digit⟩ | A | B | C | D | E | F.

⟨digit⟩ = 0 | 1 | 2 | 3 | 4 | 5 | 6 | 7 | 8 | 9.

⟨boolean value⟩ = 0 | 1.

⟨am suffix⟩ = PC.

⟨amplitude suffix⟩ = V | MV | UV | NV | DB.

⟨dac designator⟩ = AM | AT | CL | DR | FM | HR | KN | KV | LE | MF | NI | PH | PI | PR | SW.

⟨fm suffix⟩ = ⟨frequency suffix⟩ | RD.

⟨frequency suffix⟩ = GZ | MZ | KZ | HZ.

⟨learn suffix⟩ = ⟨pseudo-hex digit⟩ (repeated 72 times).

⟨pseudo-hex digit⟩ = A | B | C | D | E | F | G | H | I | J | K | L | M | N | O | P.

⟨record terminator⟩ = LF | CR | DAB^EOI. *

NOTE

Only one of two characters, linefeed or carriage return, act as a record terminator. The other one is ignored.

⟨string terminator⟩ = ; | ,.

⟨status message⟩ = ⟨generator response string⟩ ⟨record terminator⟩.

⟨generator response string⟩ = ⟨boolean value⟩
| [—] ⟨unsigned integer⟩
| ⟨unsigned integer⟩ , ⟨unsigned integer⟩ ,
| ⟨unsigned integer⟩ , ⟨unsigned integer⟩
| ⟨learn suffix⟩
| {⟨unsigned integer⟩,} ⟨unsigned integer⟩.

```
⟨interface message⟩   =  ⟨device clear interface message⟩
                         | ⟨selected device clear interface message⟩
                         | ⟨group execute trigger interface message⟩
                         | ⟨go to local interface message⟩
                         | ⟨interface clear interface message⟩
                         | ⟨local lockout interface message⟩
                         | ⟨request service interface message⟩
                         | ⟨serial poll enable interface message⟩
                         | ⟨serial poll disable interface message⟩.
                         | ⟨ATN⟩ ⟨DAB⟩ ⟨DAC⟩ ⟨DAV⟩ ⟨END⟩ ⟨MLA⟩
                         | ⟨MTA⟩ ⟨REN⟩ ⟨RFD⟩ ⟨SRQ⟩ ⟨UNL⟩.

⟨local message⟩       =  ⟨listen only⟩
                         | ⟨new byte available⟩
                         | ⟨power on⟩
                         | ⟨ready⟩
                         | ⟨request service⟩
                         | ⟨return to local⟩.
```

Section 7
Accessory and Option Information

This section contains information about some of the accessories and options available for use with the Models 6070A and 6071A Synthesized RF Signal Generators. The accessories are described in Table 7-1. The options are listed in Table 7-1 and described in detail in individual subsections. For example, information about the 607XA-130 is located in subsection 7A and information about option 607XA-570 is located in subsection 7B, etc. All options and accessories for the 6070A and the 6071A are listed in Table 7-1.

Table 7-1. 6070A/6071A Accessories and Options

MODEL/ OPTION NO.	NAME	COMMENTS
	ACCESSORIES	
Y6001	Rack Mount Kit	Includes: M05-205-600 (5½ inch Rack Mount Ears) and M00-280-610 (24-inch Rack Slides).
Y8001	IEEE Standard Cable, 1 meter	
Y8002	IEEE Standard Cable, 2 meters	
Y8003	IEEE Standard Cable, 4 meters	
Y9100	Attenuator, 6 dB	50 Ohm, 2W, BNC
Y9101	Attenuator, 15 dB	50 Ohm, 2W, BNC
Y9102	Attenuator, 20 dB	50 Ohm, 2W, BNC
Y9103	50 Ohm Feedthru Termination, BNC	
Y9111	Coaxial Cable, 50 Ohm, 3 feet (0.91m), BNC	
Y9112	Coaxial Cable, 50 Ohm, 6 feet (1.83m), BNC	
Y9300	Directional Coupler, 100 kHz to 2 GHz, 50 Ohm Impedance, BNC	1.95 dB Coupling, 0.5 dB Insertion Loss, typically 30 dB directivity to 1 GHz.
Y9301	Min-loss Pad, DC to 1 GHz, 50 Ohm in - 75 Ohm Out, 1 W, BNC	Better than 1.2 to 1 VSWR, not more than 6 dB Insertion loss.

Table 7-1. 6070A/6071A Accessories and Options (cont)

MODEL/ OPTION NO.	NAME	COMMENTS
Y9302 Y9303 Y9304 Y9305 Y9306	Attenuator, 3 dB Attenuator, 6 dB Attenuator, 10 dB Attenuator, 20 dB Attenuator, 30 dB	DC to 1 GHz, 2W average, 50 Ohm, 1.25 VSWR max., Type N
Y9307	Adapter, Type N Male to BNC Female, 75 Ohm impedance	
Y9308	Adapter, Type N Male to BNC Female, 50 Ohm impedance	
Y9309	Adapter, Type N Male to Type N Male	
Y9310	Adapter, Type N Male to SMA Female	
Y9311	RF Detector, Broad crystal detector, 50 Ohm, BNC	Total Output Flatness: ±0.6 dB 100 kHz to 1.2 GHz, positive output.
Y9312	Double Balanced Mixer, 500 Hz to 10 MHz, BNC	+7 dBm LO, conversion loss 10 dB max., isolation 20 dB min.
Y9313	Double Balanced Mixer, 2 MHz to 1 GHz, BNC	17 dBm LO, conversion loss 10 dB max., isolation 20 dB min.
Y9314	Power Splitter, 2 MHz to 1 GHz, BNC	
Y9315	Coaxial Cable, 50 Ohm, Type N male	
Y9316	Cap, Non-shorting, BNC	
Y9317	50 Ohm Termination, Shielded, Type N	
	OPTIONS	
607XA-130	Oven Reference	High stability timebase in an oven.
607XA-570	Non-Volatile Memory	Battery powered memory. Provides 50 storage locations for front panel setups. Retains information for about 4 years.
607XA-830	Rear Panel RF Output	Provides the 6070A RF output to the rear panel via a type N connector.
607XA-831	Auxiliary RF Output	Provides a portion of the RF output at a rear panel BNC connector. This signal is tapped off of the RF output signal before the level detector, so frequency is accurate, but level is not.
607XA-870	Reverse Power Protection	Provides reverse power protection for transceiver test applications (withstands up to 50 watts protection from a 50 Ohm source over the frequency range of 200 kHz to 1040 MHz and will withstand up to 50V *dc*).

Section 7A
607XA-130 Oven Reference Option

7A-1. INTRODUCTION

7A-2. This option replaces the standard 10 MHz open-air timebase with an oven-controlled 10 MHz timebase for increased output frequency stability.

7A-3. SPECIFICATIONS

7A-4. Specifications for the 607XA-130 Oven Reference Option are as follows:

Frequency ..... 10 MHz
Aging Rate ..... $<\pm 5 \times 10^{-10}$/day after 21 days
Temperature Stability ..... $<\pm 2 \times 10^{-10}$/degree Celsius

7A-5. OPERATION

7A-6. Operation of an instrument equipped with the 607XA-130 Oven Reference Option is the same as operation of an instrument equipped with the standard timebase with the following exception. When the Front Panel POWER switch is set to STBY (STBY POWER indicator on), power is still supplied to the oven of the timebase to maintain temperature stability.

Section 7B
6070XA-570 Non-Volatile Memory Option

7B-1. INTRODUCTION

7B-2. This option provides 50 permanent (nonvolatile) memory locations for storing front panel setups. When the instrument is in the standby or ON condition, power is supplied to this option, and when line power is removed from the instrument, the option has an internal battery which will allow the contents of the memory locations to be stored for up to 4 years.

7B-3. OPERATION

7B-4. Operation of an instrument with the 607XA-570 Option installed is the same as operation of a standard instrument with the following three exceptions:

1. The instrument with a 607XA-570 Option installed can store up to 50 front panel setups.

2. With line power disconnected from the instrument, the contents of the 50 nonvolatile memory locations are not lost.

3. When the POWER control is set to the ON position, the last front panel setup is recalled instead of the standard power on setup.

Section 7C
607XA-830 Rear RF Output Option

7C-1. INTRODUCTION

7C-2. This option provides the RF output signal of the instrument at the rear panel Type-N connector instead of the front panel RF OUTPUT connector.

7C-3. SPECIFICATIONS

7C-4. Specifications for the signal available at the rear panel RF OUT connector are the same as the specification for the signal aavailable at the front panel RF OUTPUT connector. These specifications are listed in Section 1.

7C-5. OPERATION

7C-6. Operation of the instrument is the same as operation of the standard instrument.

Section 7D
607XA-870 Reverse Power Protection Option

7D-1. INTRODUCTION

7D-2. The 607XA-870 Reverse Power Protection Option protects the instrument from damage due to accidental application of RF power into the RF OUTPUT connector (for example, during transceiver testing).

7D-3. SPECIFICATIONS

7D-4. The specifications are as follows:

Protection Level	This option provides protection up to 50 watts from a 50-Ohm source over the frequency range of 200 kHz to 1040 MHz. The circuitry will withstand up to 50V dc. This option provides protection whether the instrument is in standby or operate or whether the line power is removed.
Trip/Reset	The RF ON control flashes to indicate a tripped condition. Press the RF ON control to reset the tripped condition.
Level Accuracy	Add ±0.5 dB to all level accuracy specifications.
Harmonics	Harmonic specifications are degraded by 5 dB for levels above +13 dBm.

7D-5. OPERATION

7D-6. Operation of instruments with the 607XA-870 Reverse Power Protection (RPP) Option installed is the same as operation of standard instruments except for the RPP trip feature. When an external signal applied to the RF OUTPUT connector exceeds about 0.5 watts, the RPP circuitry trips to protect the RF output attenuator circuitry. The RF OUTPUT ON control flashes to indicate a tripped condition. Press the RF OUTPUT ON control to reset a tripped condition. The RF signal is again present at the RF OUTPUT connector.

SIGNAL GENERATOR
FRONT PANEL

sht 1 of 2

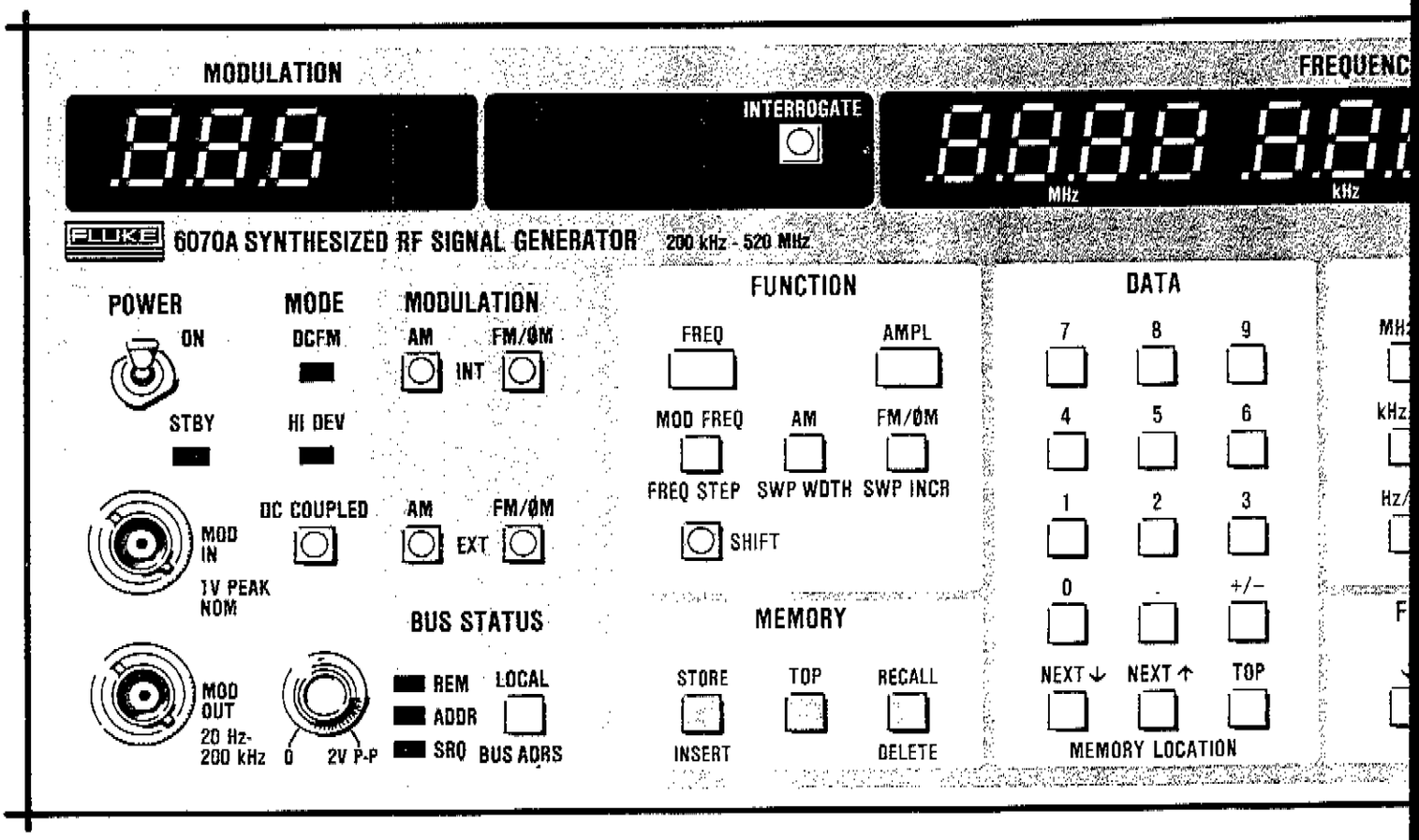

SIGNAL GENERATOR
FRONT PANEL
Sht 2 of 2

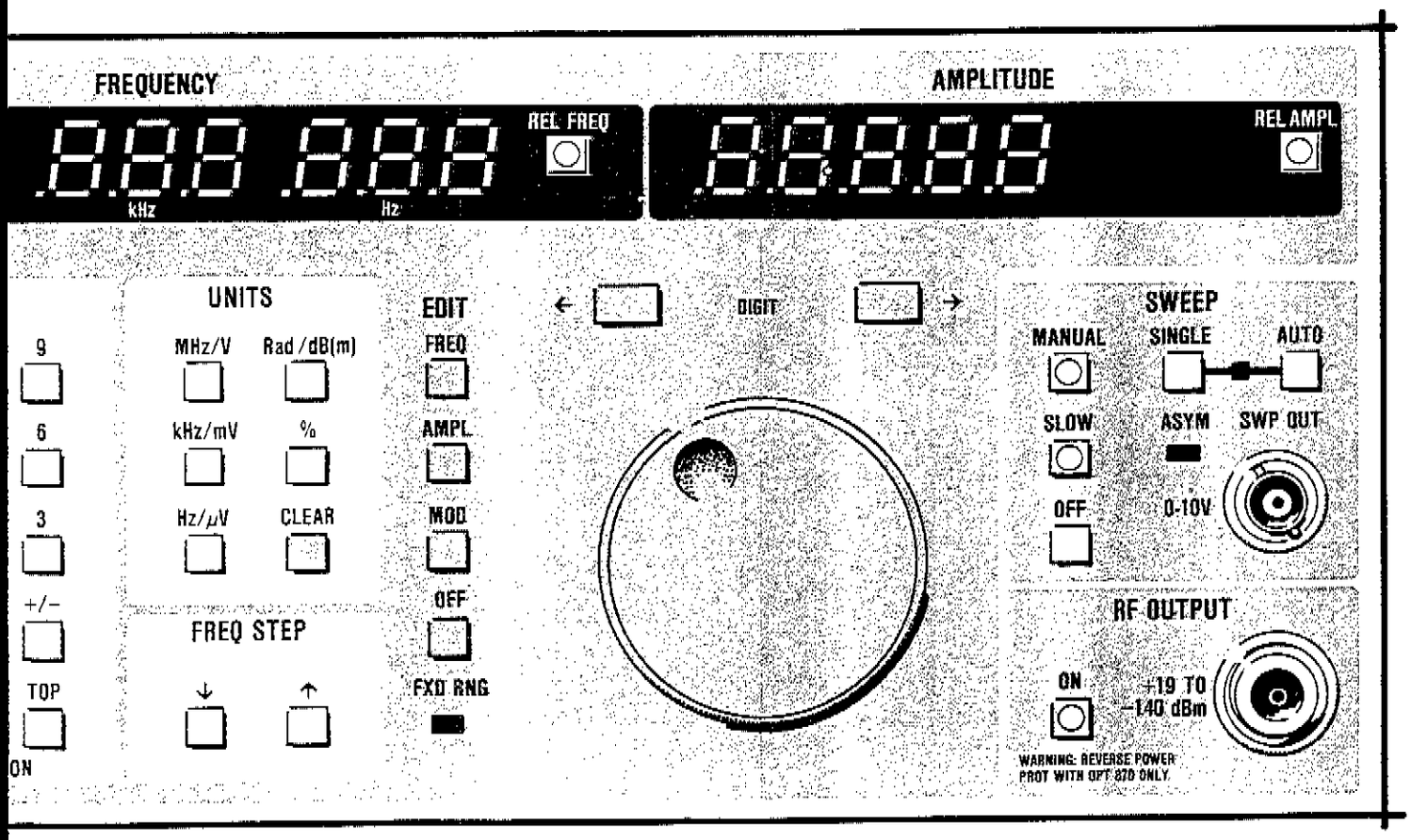

6070A Synthesized RF Signal Generator Front Panel