SONY

TRINITRON® COLOR MONITOR

CHM-9001

SERVICE MANUAL

MICROFILM

MON

SAFETY CHECK-OUT

After correcting the original service problem, perform the following safety checks before releasing the set to the customer:

1. Check the area of your repair for unsoldered or poorly-soldered connections. Check the entire board surface for solder splashes and bridges.
2. Check the interboard wiring to ensure that no wires are "pinched" or contact high-wattage resistors.
3. Check that all control knobs, shields, covers, ground straps, and mounting hardware have been replaced. Be absolutely certain that you have replaced all the insulators.
4. Look for unauthorized replacement parts, particularly transistors, that were installed during a previous repair. Point them out to the customer and recommend their replacement.
5. Look for parts which, though functioning, show obvious signs of deterioration. Point them out to the customer and recommend their replacement.
6. Check the B+ and HV to see they are at the values specified. Make sure your instruments are accurate; be suspicious of your HV meter if sets always have low HV.

SONY

TRINITRON® COLOR MONITOR

CHM-9001

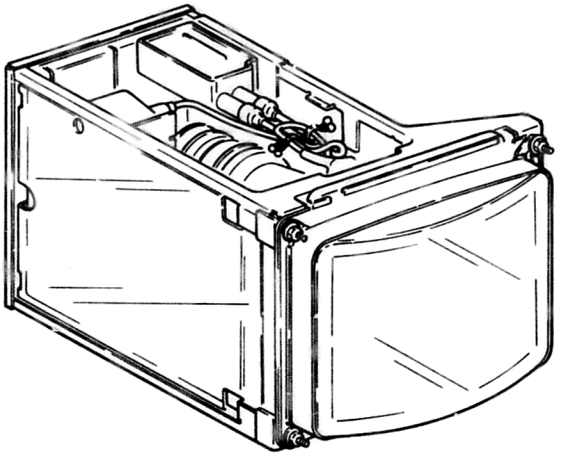

SAFETY-RELATED COMPONENT WARNING !!

COMPONENTS IDENTIFIED BY SHADING AND MARK ⚠ ON THE SCHEMATIC DIAGRAMS, EXPLODED VIEWS AND IN THE PARTS LIST ARE CRITICAL TO SAFE OPERATION. REPLACE THESE COMPONENTS WITH SONY PARTS WHOSE PART NUMBERS APPEAR AS SHOWN IN THIS MANUAL OR IN SUPPLEMENTS PUBLISHED BY SONY. CIRCUIT ADJUSTMENTS THAT ARE CRITICAL TO SAFE OPERATION ARE IDENTIFIED IN THIS MANUAL. FOLLOW THESE PROCEDURES WHENEVER CRITICAL COMPONENTS ARE REPLACED OR IMPROPER OPERATION IS SUSPECTED.

SERVICE MANUAL

SPECIFICATIONS

System	Raster scanning method (non-interlace) R/G/B input, full color system
Picture tube	Super fine-pitch Trinitron color tube 0.26 mm phosphor pitch with aperture grill 90 degree deflection 9 inch Anti-reflective coating
Horizontal deflection (fh)	25.0 kHz
Vertical deflection (fv)	59.95 Hz
Active display area	approx. 160 x 120 mm (WxH)
Resolution	576 x 368 x dots x lines (WxH)
Signal input	RGB video signal: 0.714 Vp-p, positive, 75 ohm impedance, analog External sync signal: H TTL, negative, 3.2 μS V TTL, negative, 120 μS Connector: 40 pin gold connector
Power requirements	+120 V ± 1V DC
Power consumption	60 W max.
Environmental conditions	Operating temperature: 0° – 65°C (when forcibly fan-cooled) Operating humidity: 5 – 95 % (40°C 125H) no condensation Storage temperature: –40° to +75° (4H)
Weight	6.2 kg
Dimensions	202 x 229 x 316 mm (HxWxD)

Design and specifications are subject to change without notice.

TABLE OF CONTENTS

Section	Title	Page
1.	**DISASSEMBLY AND REPLACEMENT**	
1-1.	B Board Removal	1-1
1-2.	CA Board Removal	1-1
1-3.	FBT Cable (HVR BLOCK) Removal and Installation	1-2
1-4.	Picture Tube Removal and Anode Cap Removal	1-2
2.	**ADJUSTMENTS**	
2-1.	Setup Adjustments	2-1
2-2.	Circuit Adjustments	2-4
2-2-1.	D Board Adjustments	2-5
2-2-2.	B Board Adjustments	2-8
2-2-3.	Hold Down Adjustments	2-10
3.	**DIAGRAMS**	
3-1.	Circuit Boards Location	3-1
3-2.	Block Diagram	3-2
3-3.	Timing Chart	3-4
3-4.	Schematic Diagram	3-5
3-5.	Printed Wiring Boards	3-9
	B Board	3-9
	D Board	3-12
	CA and CB Boards	3-14
3-6.	Semiconductors	3-15
4.	**EXPLODED VIEW**	4-1
5.	**ELECTRICAL PARTS LIST**	
	B Board	5-1
	CB and D Boards	5-3
	CA Board	5-5

SECTION 1
DISASSEMBLY AND REPLACEMENT

1-1. B BOARD REMOVAL

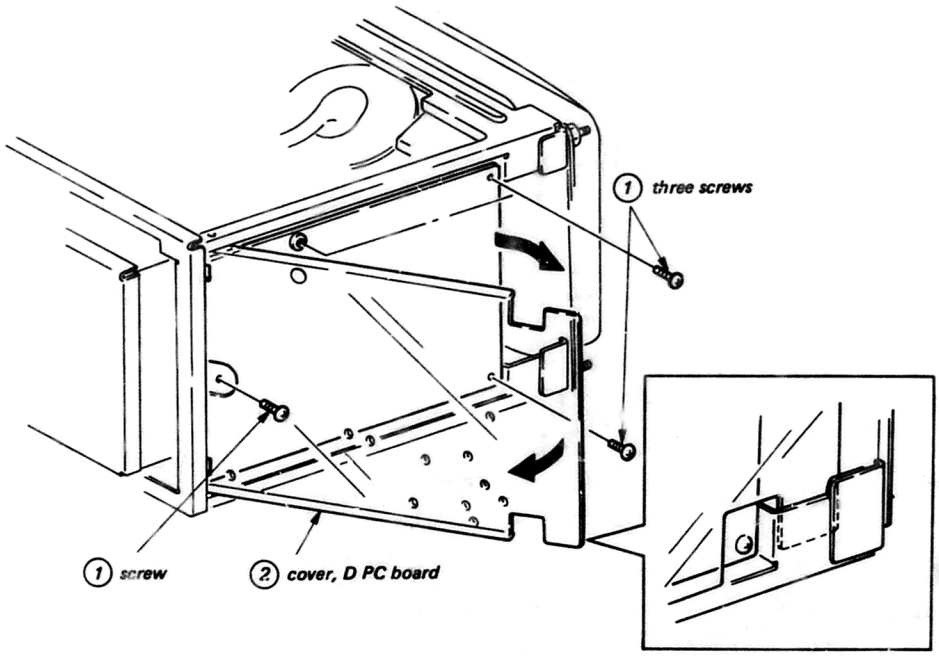

1-2. CA BOARD REMOVAL

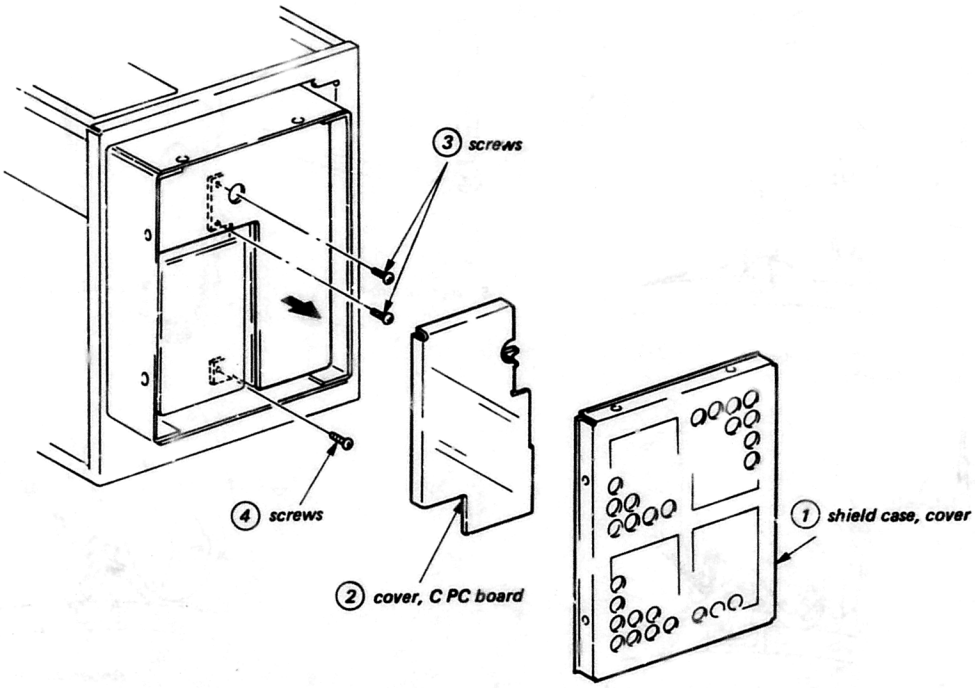

1-3. FBT CABLE (HVR BLOCK) REMOVAL AND INSTALLATION

1. REMOVAL

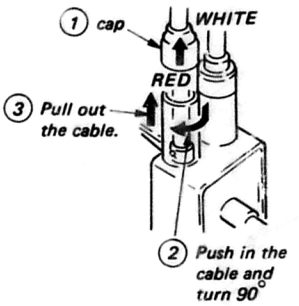

2. INSTALLATION

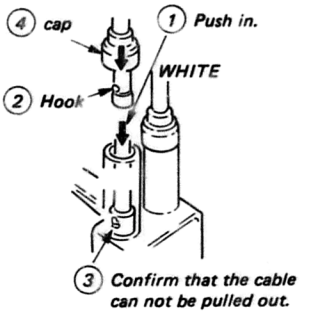

1-4. PICTURE TUBE REMOVAL AND ANODE CAP REMOVAL

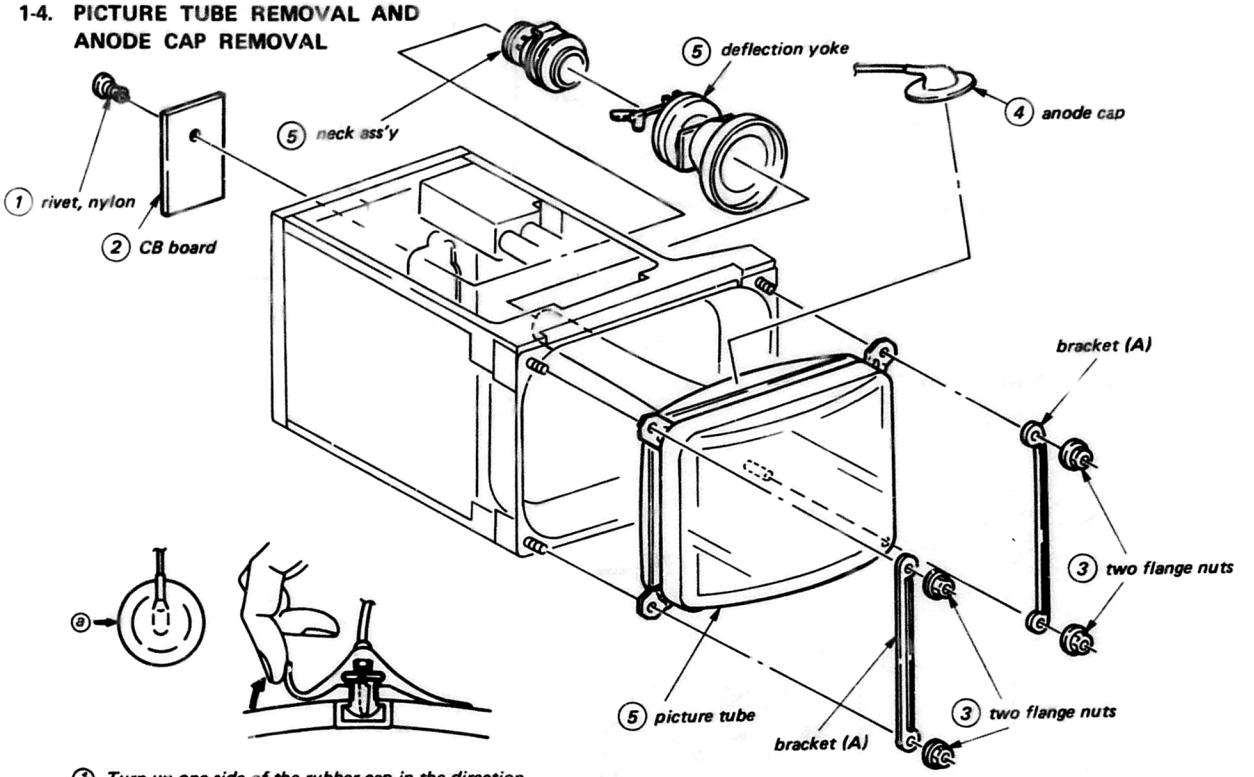

① Turn up one side of the rubber cap in the direction indicated by the arrow ⓐ.

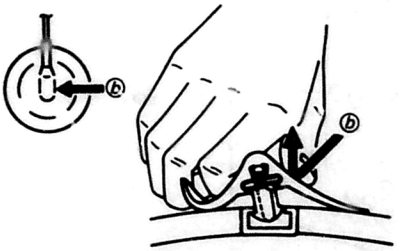

② Using a thumb, pull up the rubber cap firmly in the direction indicated by the arrow ⓑ.

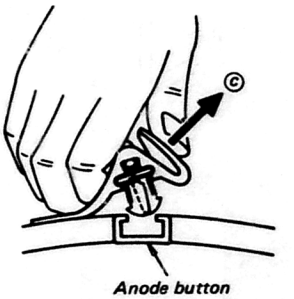

③ When one side of the rubber cap is separated from the anode button, the anode cap can be removed by turning up the rubber cap and pulling up it in the direction of the arrow ⓒ.

2-1. SETUP ADJUSTMENTS

2-1-1. Landing Adjustment

Input an all-white signal from VG-804 and adjust the corner landing deflection yoke.
Do not use a magnet, whenever possible.
DY slant: horizontal, vertical ±0.8
Tighten the DY very tightly.

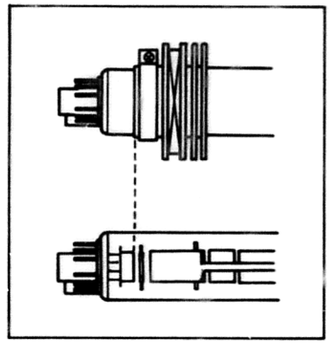

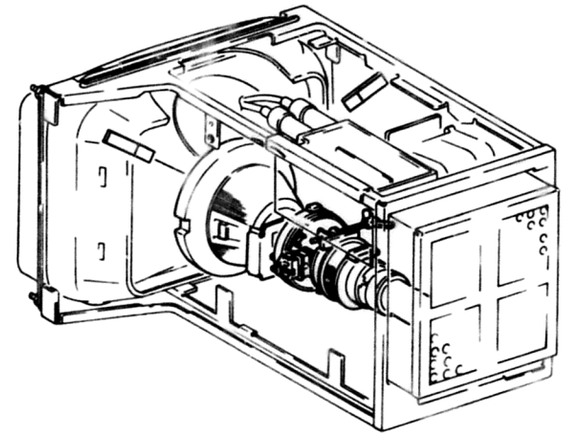

Convergence Adjustment

Preparations:

1) Input a dot pattern signal from VG-804.
2) Adjust the picture to optimum condition with BRIGHT and PICTURE.
3) Adjust landing and white balance.
4) Perform the following adjustments first.
   - Focus
   - Pin phase
   - Horizontal amplitude
   - Vertical amplitude
   - Pin correction

Static Convergence

- **Horizontal Static Convergence**

1) Adjust H. STAT RV703 so that horizontal convergence is lined up at the center of the picture.
2) Perform HMC correction when blue is off in the same direction over the entire picture.
3) Use the BMC magnet only from the left when facing the face panel from the front. (Move BLUE only.)

- **Vertical Static Convergence**

1) Adjust V. STAT RV803 so that vertical convergence is lined up at the center of the picture.
2) Perform VMC correction when blue is off in the same direction over the entire picture.
3) Move the BMC magnet and match up red, green and blue.

Notes:

1) HMC and VMC correction affect each other, so be sure to repeat 2 – 3 times.
2) Focus may be affected by HMC and VMC correction, so in that case perform focus adjustment.
3) Be sure to apply paint lock after completing adjustment.

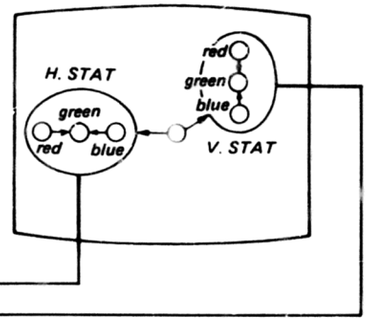

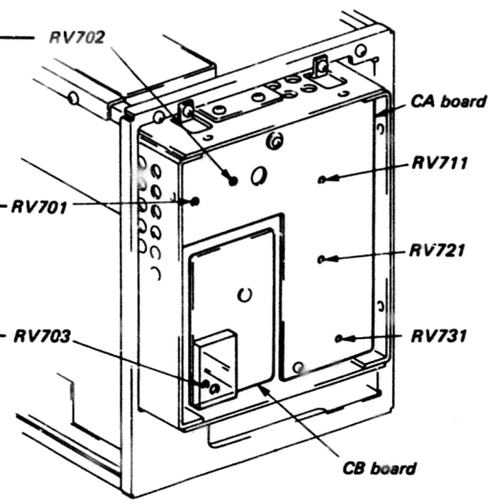

FOCUS

Adjust RV701 (FOCUS) for the best picture.

- **SCREEN**

1) BRIGHT . . . MIN CONT . . . MIN
2) Adjust RV702 to the point where the raster of the color with the deepest cut-off disappears.

Dynamic Convergence

- Perform H. AMP (RV807), H. TILT (RV806) and Y. BOW (RV805), Y. CROSS (RV804) as follows.

H. AMP

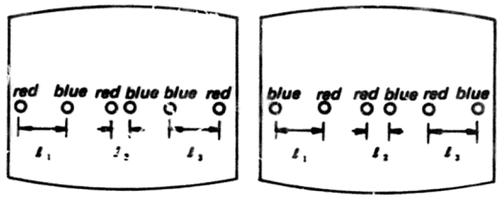

Adjust RV807 so that $\ell 1 = \ell 2$ or $\ell 2 = \ell 3$.

H. TILT

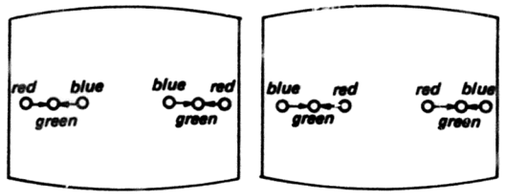

Adjust RV806 so that red, green and blue overlap.

Y. BOW

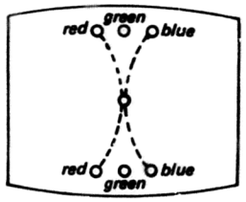

Adjust RV805 so that red, green and blue overlap.

V. TOP

Adjust RV801 so that vertical misconvergence at the upper part of the Y axis is minimum.

Y. CROSS

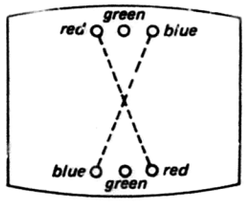

Adjust RV804 so that red, green and blue overlap.

V. BOTTOM

Adjust RV802 so that vertical misconvergence at the bottom part of the Y axis is minimum.

Y. CROSS, Y BOW

Minimize the cross misconvergence and bow misconvergence at the ends of the Y axis with Y CROSS RV804 and Y BOW RV805.

Dynamic Misconvergence Adjustment

Preparations:

Before beginning, perform horizontal static convergence adjustment and vertical static convergence adjustment.

1. Loosen the deflection yoke screw.
2. Remove the deflection yoke spacer.
3. Move the deflection yoke as shown in the diagram so that convergence is optimum.
4. Tighten the deflection yoke scerew.
5. Mount the deflection yoke spacer.

White Balance Adjustment

- Input SMC-70 white pattern and adjust white balance at the center of the CRT using a Minolta analyzer.

SUB BRT, CONT Adjustment

- With BRT VR CENT, CONT VR MAX, input the SMC-70 all white pattern and adjust SUB CONT RV902 for the designated value of brightness at the center of the CRT. Then input a dot pattern, and with BRT CENT, CONT MIN, adjust SUB BRT RB901 so that the pedestal sinks. Repeat this 2 – 3 times.

RV711 (R BKG), RV721 (G BKG), RV731 (B BKG)

Cut off ≒ 3nit
ABL ≒ 100nit

Repeat W/B tracking 2 – 3 times.

Specifications: 9300°K + 8 MPCD

3nit	100nit
X = 0.281 ± 0.003	X = 0.281 ± 0.005
Y = 0.297 ± 0.003	Y = 0.297 ± 0.005
All white	Dot

Specified value: 100nit $^{+5}_{-0}$nit pedestal should sink.

BRT CENT, CONT MAX → BRT CENT, CONT MIN

Repeat this twice.

(3) Screen-corner Convergence

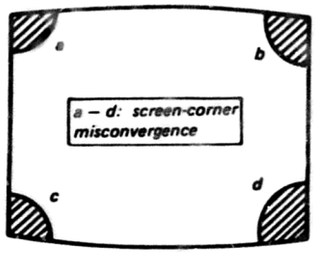

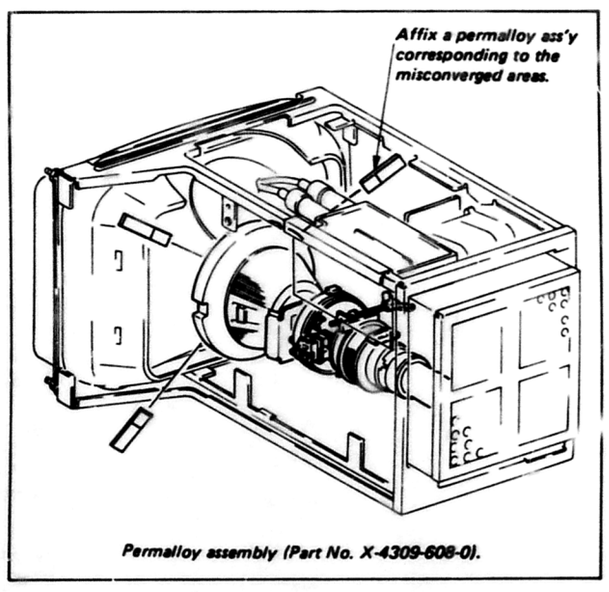

Permalloy assembly (Part No. X-4309-608-0).

2-2. CIRCUIT ADJUSTMENTS

Note: (1) Equipment required

1. Oscilloscope
2. Digital multimeter
3. SMC-70 + software
4. Frequency counter
5. Signal generator

(2) Input signal

Input the 25kHz software color bar from SMC-70. Or input the following signals.

- Set standard state. Input crosshatch signal.
  - · +B = 120.0V ± 0.5V input
  - · BRT = 50% (CENT)
  - · CONT = 100% (max)
- Astrodesign VG-804 setting conditions
  - · CLOCK FREQ – 20MHz
  - · H PERIOD – 40μS
  - · H SYNC – 3.2μS
  - · H DISP START – 10.0μS
  - · H DISP TIME – 28.9μS
  - · V TOTAL LINES – 417H
  - · V SYNC – 3H
  - · EQ PULSE – 0H
  - · V DISP START – 45H
  - · V DISP LINES – 367H
  - · CROSS HATCH
    H: 3.2μS, V: 61 dot
  - · COLOR BAR
    H: 4.2μS, V: 62 dot
  - · GRAY SCALE
    H: 1.8μS, V: 22 dot
  - · "H character"
    [CHR] + H: 9 dot, V: 10 dot + [DATA] "48"
  - · "DOT"
    [CHR] + H: 32 dot, V: 32 dot + [DATA] "A5" or "2E"
  - · "All white"
    [CHR] + H: 32 dot, V: 32 dot + [DATA] "A0" + [INV]
  - · Pattern for measuring frequency response
    [CHR] + H: 32 dot, V: 32 dot
    DATA

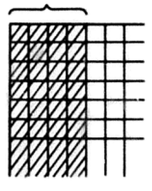

Make 4 vertical lines worth white.

- FOCUS Adjustment Pattern
  [CHR] + H: 9 dot, V: 10 dot + [DATA] "01"
  SCAN – NONINT
  H/HV – H
  SERRATION – OFF
  H/HV – NFGA
  V – NEGA
  NRZ/RZ – NRZ
  SYNC – OFF
- CRT FACE facing west

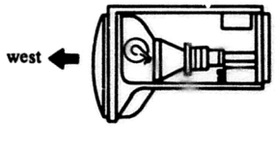

- Unless otherwise indicated, input signal and user controls should conform to standard state.
- Output level should be 0.714V/75Ω, analog.

(3) Knob setting

Perform check and adjustment with the knobs and switches in the positions given below unless otherwise indicated.

(4) External power supply voltage: 120 ± 0.5V

(5) CIRCUIT ADJUSTMENTS

Adjustment	Circuit Board	Page
PICTURE DISTORTION (BALL CHART) H FREQ V FREQ (V HOLD) PIN PHASE PIN AMP H SIZE V SIZE, V LIN H CENT, V CENT HORIZONTAL LINE	D	2-5 to 2-7
H PULSE WIDTH	B	2-8 to 2-9
HOLD DOWN	D	2-10

2-2-1. D Board Adjustment

V SIZE, V LIN

Adjust RV502 and RV509 for optimum picture vertical size.

H CENT, V CENT

Adjust RV503 and RV510 so that the raster is in the center both horizontally and vertically.

PIN AMP → PIN PHASE → H SUB SHIFT → H SIZE

Adjust so that the pin distortion in the middle of the vertical lines straightnes with the above adjustment, and adjust the corners with TOP PIN and BOTTOM PIN adjustments.

HORIZONTAL LINE ADJUSTMENT

V HEIGHT → V SHIFT → V LIN

Check with the D board closed.
With the CRT facing west, adjust PIN PHASE so that there is a slight reverse trapezoid. (top = bottom + 1mm)

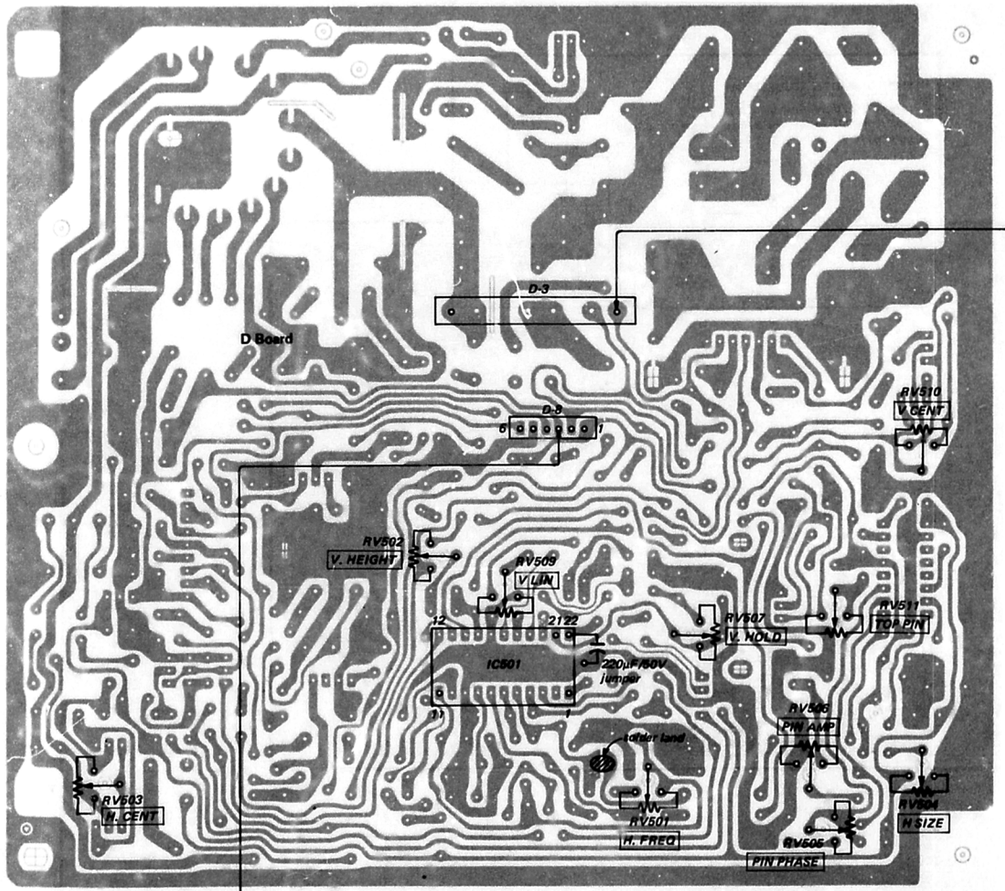

frequency counter

H FREQ ADJUSTMENT

1) *Input the 25kHz software dot inverted signal.*
2) *Short IC501 pins (1) and (21).*
3) *Connect pin (3) of the D8 connector to the frequency counter.*
4) *Adjust RV501 so that the frequency is 25,000 ±100Hz.*
5) *Remove the short in step 2).*

PARALLELOGRAM DISTORTION CHECK

If there is parallelogram distortion visible overall, even when all of the crosshatch intersections are within the BALL CHART, remove the solder bridge on the designated land. Adjust picture distortion after removing the solder bridge.

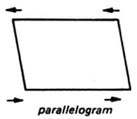

parallelogram distortion

PICTURE DISTORTION ADJUSTMENT (BALL CHART)

Adjust so that the crosshatch intersection is at the center of the BALL.
(Adjust for GREEN monochrome.)

PIN AMP → PIN PHASE → H SIZE → H SUB SHIFT

For the above adjustment, make the middle (shaded portion in the figure below) of the striped portion as straight as possible, and adjust the top and bottom (marked o on the bottom) with TOP PIN RV511 and BOTTOM PIN RV510.
Be sure to check picture distortion with the D board closed.

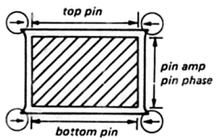

frequency counter

V FREQ ADJUSTMENT (V. HOLD)

1) *Ground IC501 pin (22) with a 220μF/50V chemical capacitor.*
2) *Connect D3 VERT midpoint voltage pin to the frequency counter.*
3) *Adjust RV507 so that the frequency is 57.0 ±1.0Hz.*
4) *Remove the capacitor in step 1).*

PIN AMP

Adjust RV506 so that the vertical lines are straight as shown below.

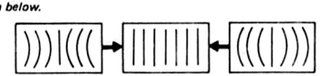

H SIZE

Adjust horizontal size with RV504.

PIN PHASE

Adjust RV505 so that the vertical lines are straight as shown below.

2-2-2. B Board Adjustments

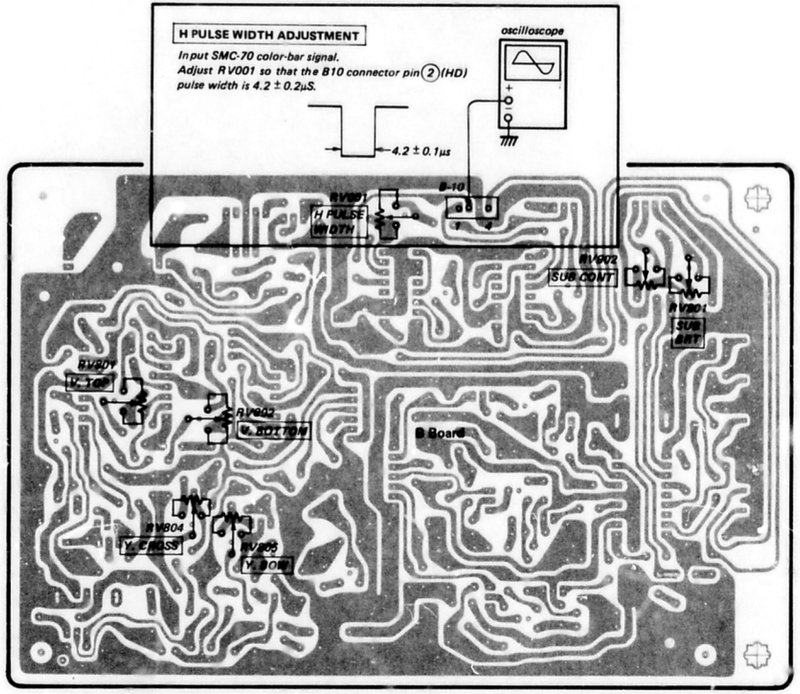

2-2-3. Hold Down Adjustments

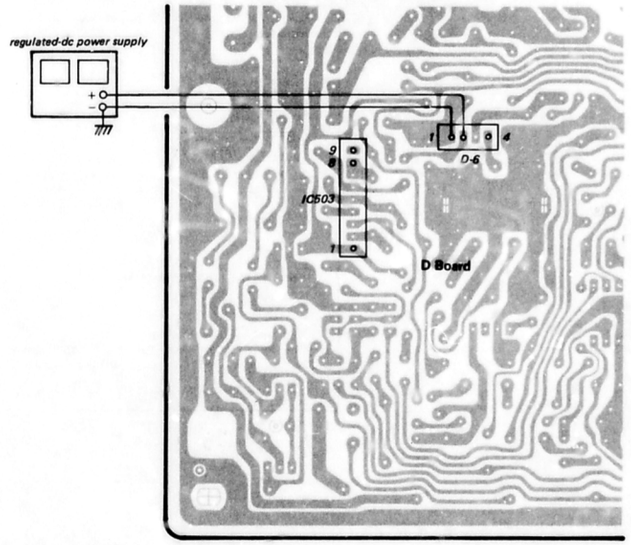

HOLD DOWN CHECK

Input SMC-70 dot signal, and confirm that HOLD DOWN operates for specified conditions (1) and does not operate for specified conditions (2).
Input SMC-70 dot inverted signal and confirm that HOLD DOWN operates for specified conditions (3) and does not operate for (4).
For specified conditions (5), measure the DC voltage between IC503 pin (8) and ground, and confirm that it is within the specified voltage.

• Specified conditions (1)	BRT = MIN, CONT = MIN D-6 2 – 1 (1 = ground) Impress 8.4 ± 0.2V DC
• Specified conditions (2)	BRT = MIN, CONT = MIN Impress 7.95 ± 0.2V DC at the above location
• Specified conditions (3)	BRT = CENT, CONT = MAX Impress 8.05 ± 0.2V DC at the above location
• Specified conditions (4)	BRT = CENT, CONT = MAX Impress 7.6 ± 0.2V DC at the above location
• Specified conditions (5)	SMC-70 dot, BRT, CONT = MIN SMC-70 dot inverted BRT = CENT, CONT = MAX
Specified voltage range	5.5 – 6.9V

SECTION 3
DIAGRAMS

3-1. CIRCUIT BOARDS LOCATION

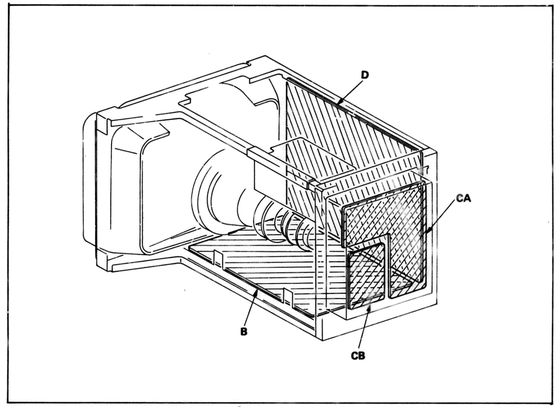

3-2. BLOCK DIAGRAM

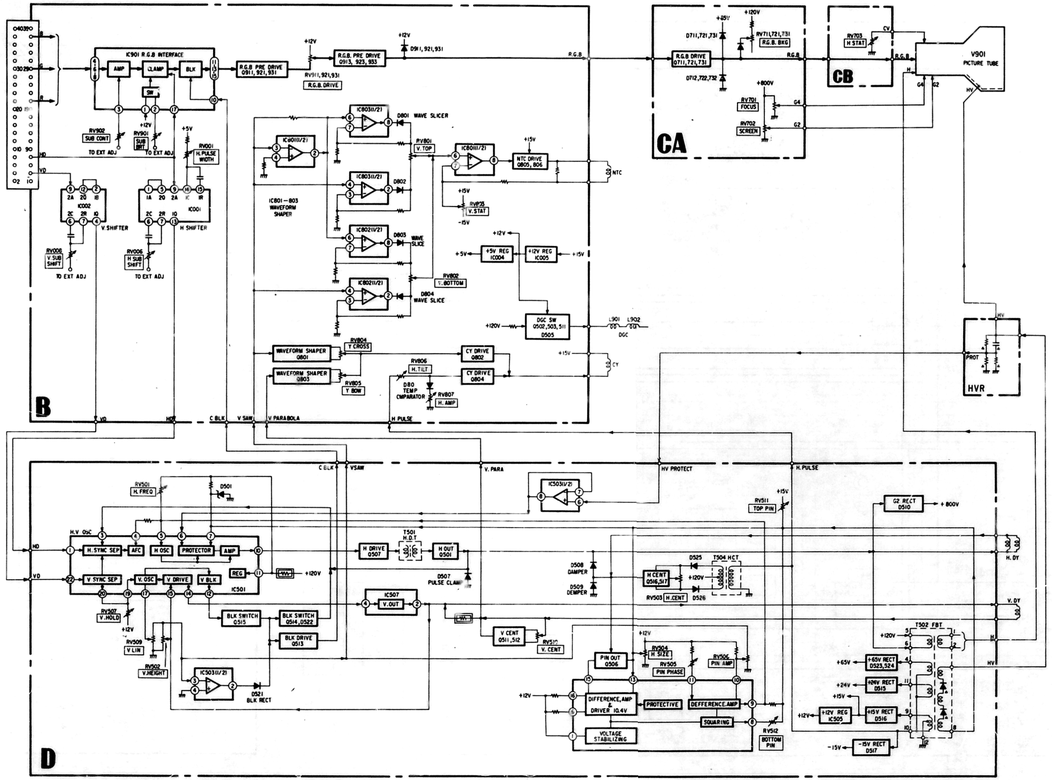

3-3. TIMING CHART

DOT CLOCK 20MHz 0.714V (75Ω ANALOG)

H PERIOD

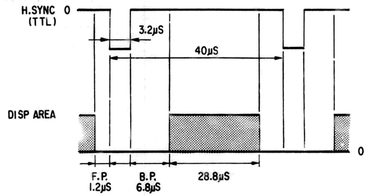

V PERIOD

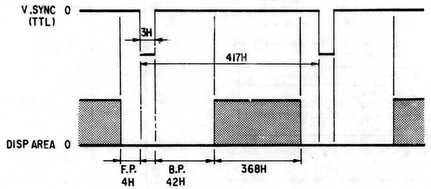

3-4. SCHEMATIC DIAGRAM

Note: The components identified by shading and mark ⚠ are critical for safety. Replace only with part number specified.

Note:

- All capacitors are in μF unless otherwise noted. pF : μμF 50WV or less are not indicated except for electrolytics and tantalums.
- Resistors on A board an M board are 1/6W and those on all other boards are 1/4W unless otherwise noted. kΩ : 1000Ω, MΩ : 1000kΩ
- ▭ : nonflammable resistor.
- ▭ : : fusible resistor.
- △ : internal component.
- All variable and adjustable resistors have characteristic curve B, unless otherwise noted.
- The components identified by ⊠ in this parts list have been carefully factory-selected for each set in order to satisfy regulations regarding X-ray radiation. Should replacement be required, replace only with the value originally used.
- When replacing components identified by ◪ , make the necessary adjustments indicated. If results do not meet the specified value, change the component identified by ⊠ and repeat the adjustment until the specified value is achieved.
- (Refer to HV HOLD DOWN Adjustment on page 2-10).
- When replacing the part in below table, be sure to perform the related adjustment.

Part replaced (◪)	Adjustment
IC501, IC503, R507, R508, R509, R511, R512, R513, R520, R555, R556, R557, R558, R600, D501	HV HOLD DOWN ADJUSTMENT (R557)

- Voltages are dc with respect to ground unless otherwise noted.
- Readings are taken with a 10MΩ digital multimeter.
- ▭ : adjustment for repair.
- Readings are taken with a color-bar video signal input.
- Voltage variations may be noted due to normal production tolerances.
- ▭ : B+ bus.
- ▭ : B− bus.
- Circled numbers are waveform references.

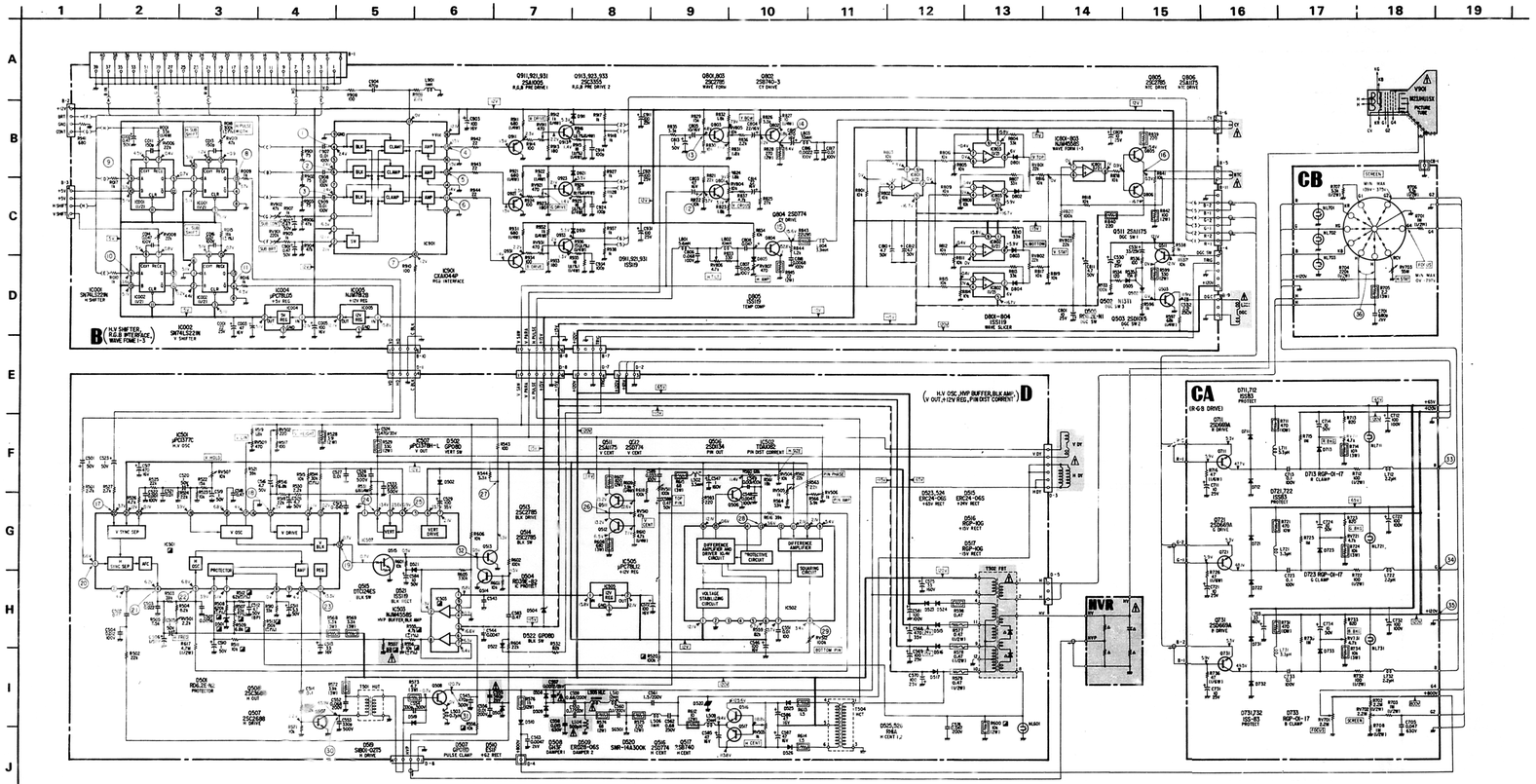

— B Board —

IC , Q	D	ADJ
511		RV001
503 502 IC001 , IC002	505	RV902 RV901 RV008 RV006
IC004		
	802 804	
IC803 IC801 913 IC802, 911	911 801 803	RV801 RV911 RV802 RV803
801, 923, IC901 921 806, 803 805	921	RV921 RV804 RV805 RV807
IC005 804, 933, 921	805 , 931	RV806
802		RV931
IC , Q	D	ADJ

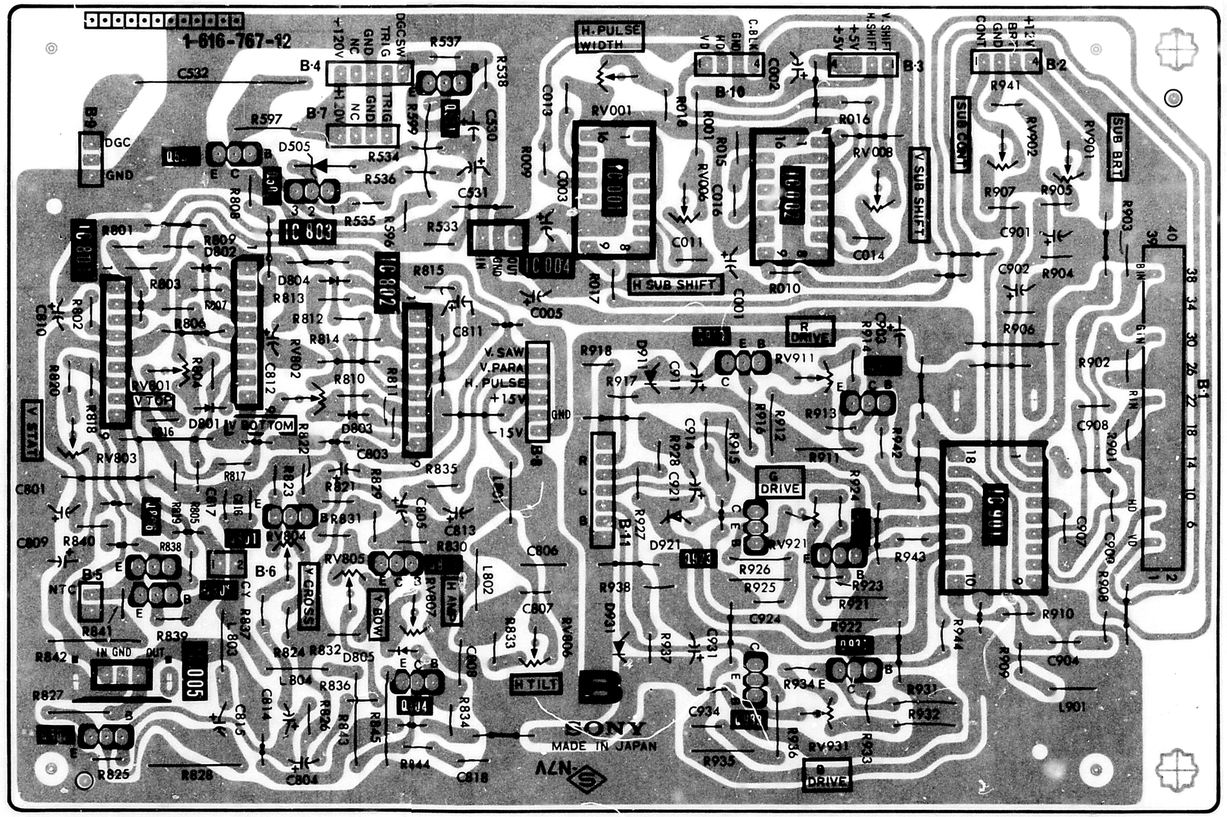

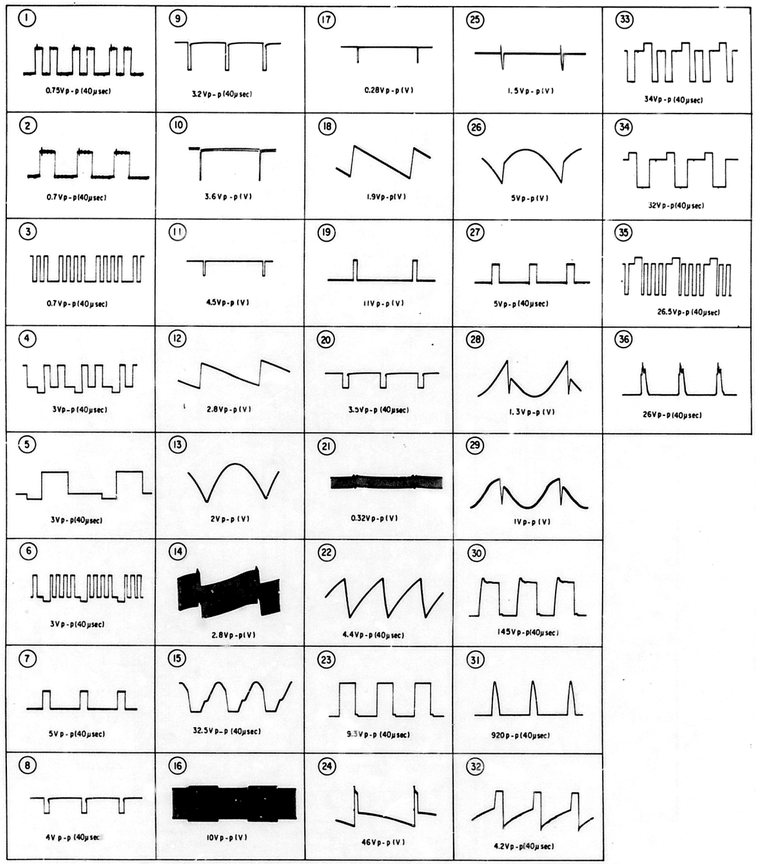

D [H.V OSC, HVP BUFFER, BLK AMP, V. OUT, +12V REG, PIN DIST CORRENT]

– D Board –

IC , Q	D	ADJ
	523	
	524,509	
	510	
	508	
	520	
508		
IC507,512	516	
	502	
511	515	
	517,519	
		RV510
IC503		RV502
IC505	IC502	
	506	RV509
		RV511
507		RV507
513,514,515	525	
IC501	526	
		RV512
517		RV506
	522	RV503
	501	RV504
516		RV505
IC , Q	D	ADJ

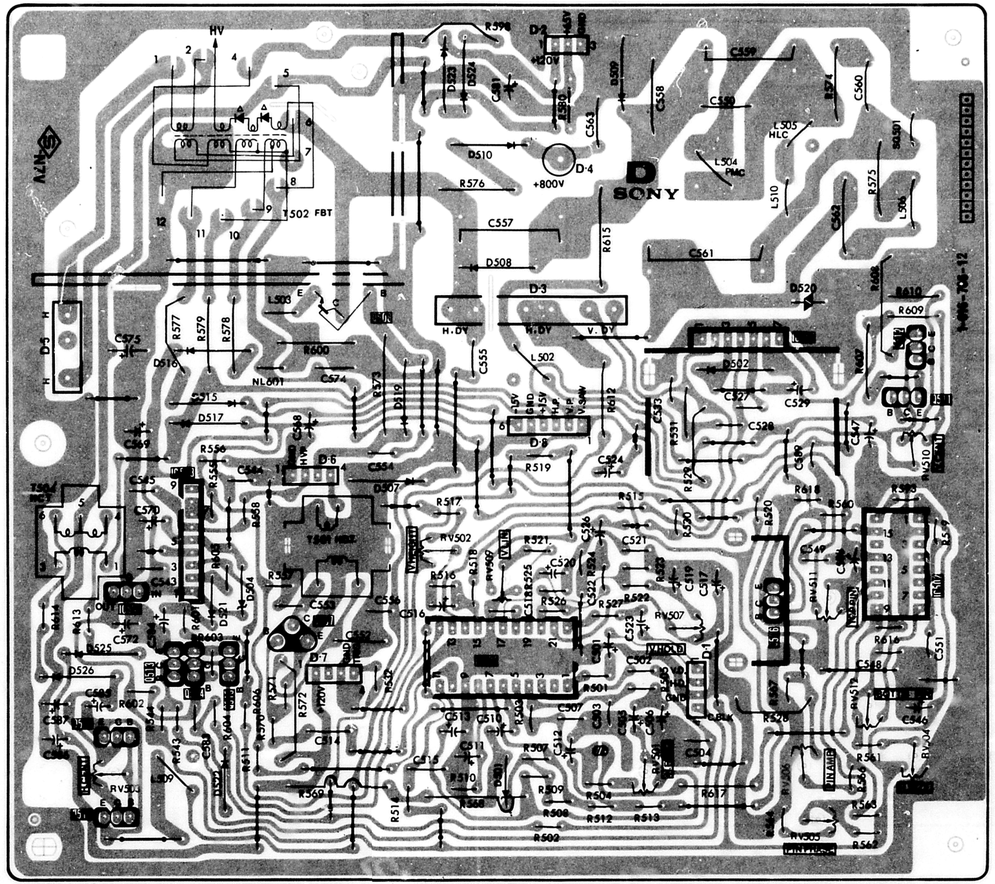

CA [R.G.B DRIVE] **CB**

– C A Board –

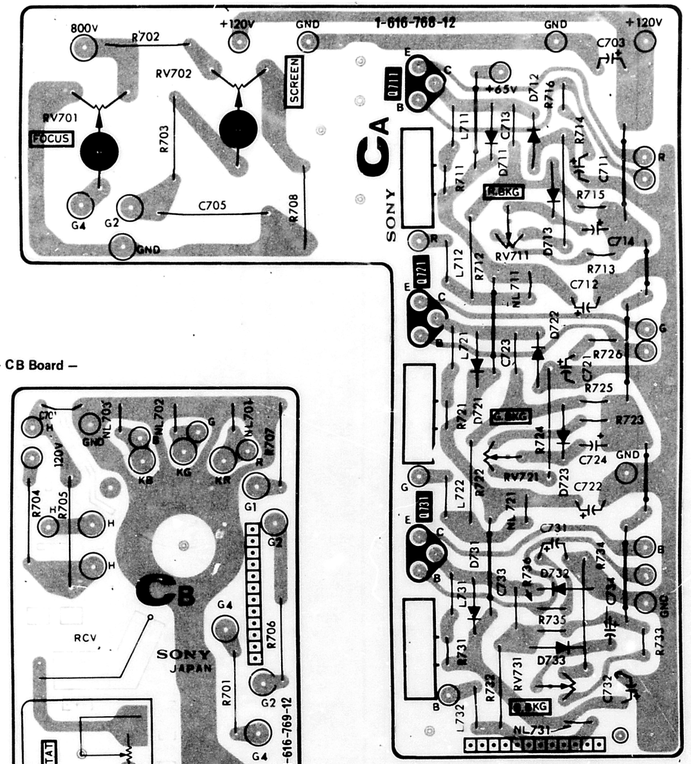

– CB Board –

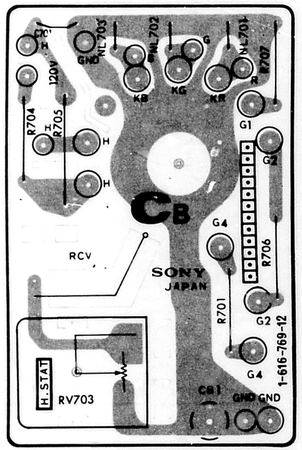

3-6. SEMICONDUCTORS

TA78L005AP

CXA-1044P

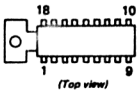

HD74LS221P
SN74LS221N
TDA1082

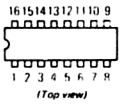

NJM4558S

NJM7812B
μPC7812H

μPC1377C

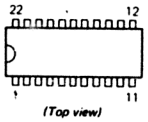

μPC1378H

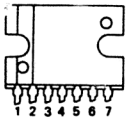

μPC78L05
μPC78L05A
μPC78L12

2SA669A
2SC2688

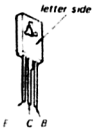

2SA933S
2SA1005
2SC1740S

2SA1048
2SA1115
2SC2458
2SC2603
DTC124ES

2SA1175
2SC2785

2SB734
2SD774

2SB740
2SB740-3
2SD789
2SD1015

2SC3355

2SC3688

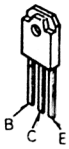

2SD1134

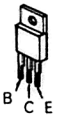

1SS83
ERD28-06S
HZ6C1
RD33E-B2
RD6.2E-N1
RD6.2E-N2

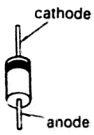

1SS119
1SS133
1SS148

ERC24-06S
RH1A
SIB01-02T5

ERC26-15S

ES1F
CP08D
HZ33EB2
RGP01-17
RGP10D
RGP10G

N13T1

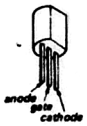

SECTION 4
EXPLODED VIEW

NOTE:
- Items with no part number and no description are not stocked because they are seldom required for routine service.
- The construction parts of an assembled part are indicated with a collation number in the remark column.
- Items marked " * " are not stocked since they are seldom required for routine service. Some delay should be anticipated when ordering these items.

The components identified by shading and mark ⚠ are critical for safety. Replace only with part number specified.

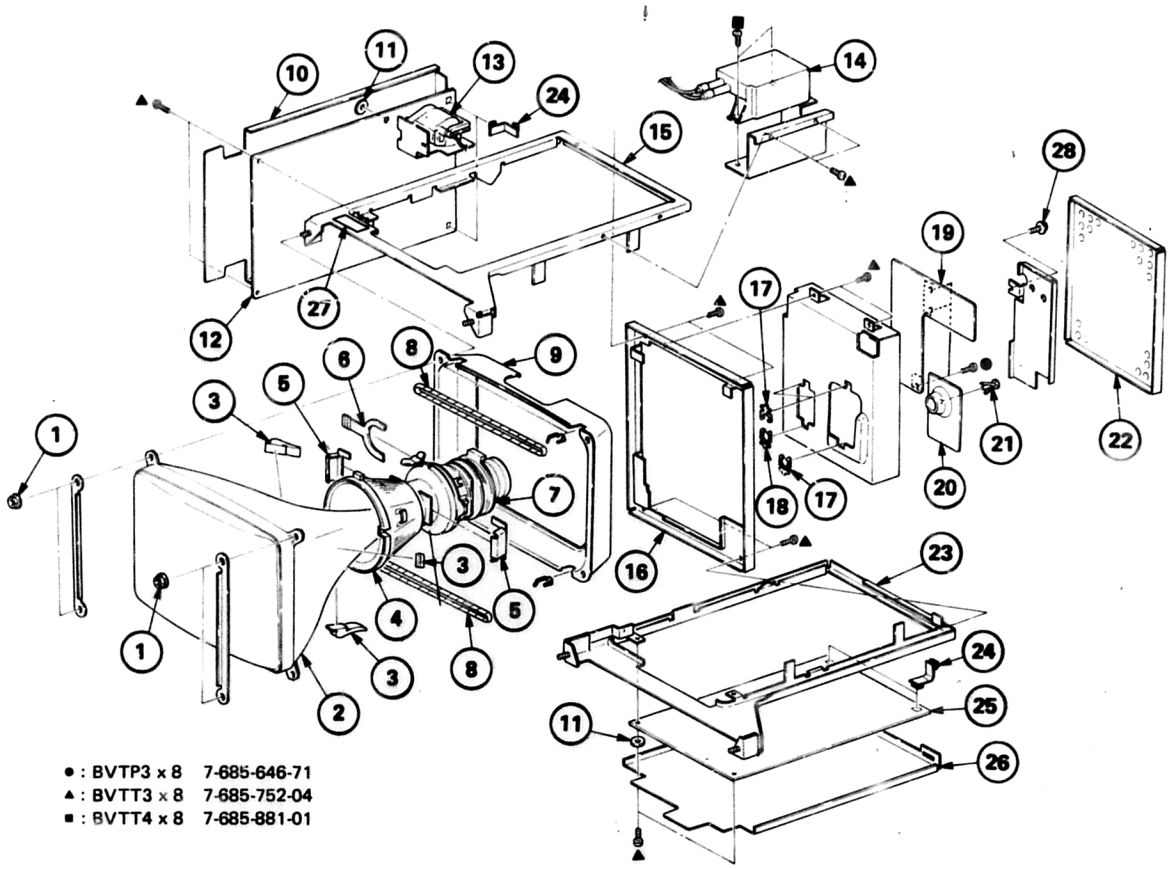

No.	Part No.	Description	Remark	No.	Part No.	Description	Remark
1	4-304-511-00	NUT, FLANGE		15	*4-377-605-01	CHASSIS	
2	⚠8-736-554-05	CRT (M23JHU15X)		16	*4-377-606-01	CHASSIS, BACK	
3	3-703-961-01	SPACER, DY		17	4-343-134-00	RETAINER, AC CORD	
4	⚠1-451-278-11	DEFLECTION YOKE (SY-149H)		18	4-343-123-00	RETAINER, AC CORD	
5	*4-370-998-01	COVER, SAFETY		19	*A-1389-694-A	CA BOARD, COMPLETE	
6	1-452-146-21	MAGNET, BMC		20	*A-1330-647-A	CB BOARD, COMPLETE	
7	⚠1-452-214-22	CRT NECK ASSY (H TYPE)		21	4-818-403-00	RIVET, NYLON	
8	⚠1-426-043-12	COIL, DEGAUSSING		22	*4-377-601-01	COVER	
9	*X-4325-705-0	CRT SHIELD ASSY		23	*4-377-605-11	CHASSIS	
10	*4-377-608-01	COVER, D PC BOARD		24	*4-313-732-00	CLIP, HINGE, CIRCUIT BOARD	
11	4-309-378-00	WASHER		25	*A-1275-064-A	B BOARD, COMPLETE	
12	*A-1345-567-A	D BOARD, COMPLETE		26	*4-377-603-01	COVER, B PC BOARD	
13	*A-1476-992-A	HV BLOCK ASSY		27	*4-377-614-01	LABEL, MODEL NUMBER	
14	⚠1-230-666-11	RESISTOR ASSY, HIGH-VOLTAGE		28	3-701-833-01	HEAD, WASHER, TAPPING SCREW	

SECTION 5
ELECTRICAL PARTS LIST

B

NOTE:

The components identified by shading and mark ⚠ are critical for safety. Replace only with part number specified.

When indicating parts by reference number, please include the board name.

• Items marked " * " are not stocked since they are seldom required for routine service. Some delay should be anticipated when ordering these items.

• All variable and adjustable resistors have characteristic curve B, unless otherwise noted.

CAPACITORS
• MF : μF, PF : μμF

RESISTORS
• All resistors are in ohms
• F : nonflammable

COILS
• MMH : mH, UH : μH

Ref.No.	Part No.	Description			Remark
	*A-1275-064-A	B BOARD, COMPLETE			
		**********			
		CONNECTOR			
B1	*1-506-555-11	HEADER 40P			
B2	*1-506-559-11	PLUG, CONNECTOR (2.5MM) 4P			
B4	*1-506-560-11	PLUG, CONNECTOR (2.5MM) 5P			
B5	*1-506-557-11	PLUG, CONNECTOR (2.5MM) 2P			
B6	*1-506-557-11	PLUG, CONNECTOR (2.5MM) 2P			
B7	*1-506-559-11	PLUG, CONNECTOR (2.5MM) 4P			
B8	*1-506-561-11	PLUG, CONNECTOR (2.5MM) 6P			
B9	*1-560-123-00	PLUG, CONNECTOR (2.5MM) 3P			
B10	*1-506-559-11	PLUG, CONNECTOR (2.5MM) 4P			
B11	*1-506-562-11	PLUG, CONNECTOR (2.5MM) 7P			
		CAPACITOR			
C001	1-123-330-00	ELECT	22MF	20%	25V
C002	1-123-379-00	ELECT	0.47MF	20%	50V
C003	1-123-332-00	ELECT	47MF	20%	16V
C005	1-123-333-00	ELECT	100MF	20%	16V
C011	1-102-500-00	CERAMIC	150PF	5%	50V
C013	1-102-500-00	CERAMIC	150PF	5%	50V
C014	1-106-212-00	MYLAR	0.047MF	10%	100V
C016	1-106-196-00	MYLAR	0.01MF	10%	100V
C530	1-123-356-00	ELECT	10MF	20%	25V
C531	1-123-343-00	ELECT	33MF	20%	25V
C532	1-130-800-00	FILM	2.2MF	10%	250V
C801	1-123-356-00	ELECT	10MF	20%	25V
C803	1-123-332-00	ELECT	47MF	20%	16V
C804	1-123-330-00	ELECT	22MF	20%	16V
C805	1-123-356-00	ELECT	10MF	20%	16V
C806	1-106-216-00	MYLAR	0.068MF	10%	100V
C807	1-106-200-00	MYLAR	0.015MF	10%	100V
C808	1-108-595-00	MYLAR	0.047MF	5%	50V
C809	1-123-356-00	ELECT	10MF	20%	25V
C810	1-123-369-00	ELECT	4.7MF	20%	50V
C811	1-123-369-00	ELECT	4.7MF	20%	50V
C812	1-123-369-00	ELECT	4.7MF	20%	50V
C813	1-123-380-00	ELECT	1MF	20%	50V
C814	1-123-330-00	ELECT	22MF	20%	16V
C815	1-123-323-00	ELECT	470MF	20%	16V
C816	1-106-180-00	MYLAR	0.0022MF	10%	100V
C817	1-106-196-00	MYLAR	0.01MF	10%	100V
C818	1-106-192-00	MYLAR	0.0068MF	10%	100V
C901	1-123-379-00	ELECT	0.47MF	20%	50V
C902	1-123-379-00	ELECT	0.47MF	20%	50V
C903	1-123-333-00	ELECT	100MF	20%	16V
C904	1-102-824-00	CERAMIC	470PF	5%	50V
C907	1-106-196-00	MYLAR	0.01MF	10%	100V
C908	1-106-196-00	MYLAR	0.01MF	10%	100V
C909	1-106-196-00	MYLAR	0.01MF	10%	100V
C911	1-123-333-00	ELECT	100MF	20%	25V
C914	1-102-973-00	CERAMIC	100PF	5%	50V
C921	1-123-333-00	ELECT	100MF	20%	25V
C924	1-102-973-00	CERAMIC	100PF	5%	50V
C931	1-123-333-00	ELECT	100MF	20%	25V
C934	1-102-973-00	CERAMIC	100PF	5%	50V
		DIODE			
D505	8-719-102-73	DIODE RD6.2E-N1			
D801	8-719-911-19	DIODE 1SS119			
D802	8-719-911-19	DIODE 1SS119			
D803	8-719-911-19	DIODE 1SS119			
D804	8-719-911-19	DIODE 1SS119			
D805	8-719-911-19	DIODE 1SS119			
D911	8-719-911-19	DIODE 1SS119			
D921	8-719-911-19	DIODE 1SS119			
D931	8-719-911-19	DIODE 1SS119			
		IC			
IC001	8-759-902-21	IC SN74LS221N			
IC002	8-759-902-21	IC SN74LS221N			
IC004	8-759-178-05	IC UPC78L05			
IC005	8-759-700-06	IC NJM78L12			
	*4-314-225-00	HEAT SINK, (A); IC005			
IC801	8-759-700-08	IC NJM4558S			
IC802	8-759-700-08	IC NJM4558S			
IC803	8-759-700-08	IC NJM4558S			
IC901	8-752-030-45	IC CXA1044P			
		COIL			
L801	1-408-163-00	MICRO INDUCTOR 5.6MMH			
L802	1-408-242-00	MICRO INDUCTOR 10MMH			
L803	1-408-247-00	MICRO INDUCTOR 33MMH			
L804	1-408-238-00	MICRO INDUCTOR 3.9MMH			
L901	1-407-717-00	MICRO INDUCTOR 1MMH			
		TRANSISTOR			
Q502	8-729-101-31	TRANSISTOR N13T1			
Q503	8-765-620-00	TRANSISTOR 2SD1015			
Q511	8-729-117-54	TRANSISTOR 2SA1175			
Q801	8-729-178-54	TRANSISTOR 2SC2785			
Q802	8-729-103-43	TRANSISTOR 2SB734			
Q803	8-729-178-54	TRANSISTOR 2SC2785			
Q804	8-729-177-43	TRANSISTOR 2SD774			
Q805	8-729-178-54	TRANSISTOR 2SC2785			
Q806	8-729-117-54	TRANSISTOR 2SA1175			
Q911	8-729-110-53	TRANSISTOR 2SA1005			
Q913	8-729-104-80	TRANSISTOR 2SC3355			
Q921	8-729-110-53	TRANSISTOR 2SA1005			
Q923	8-729-104-80	TRANSISTOR 2SC3355			
Q931	8-729-110-53	TRANSISTOR 2SA1005			
Q933	8-729-104-80	TRANSISTOR 2SC3355			
		RESISTOR			
R001	1-247-167-00	CARBON	33K	5%	1/4W
R009	1-247-831-00	CARBON	1K	5%	1/6W

B

Ref.No.	Part No.	Description				Remark
R010	1-247-831-00	CARBON	1K	5%	1/6W	
R015	1-215-451-00	METAL	18K	1%	1/6W	
R016	1-247-831-00	CARBON	1K	5%	1/6W	
R017	1-247-831-00	CARBON	1K	5%	1/6W	
R018	1-215-480-00	METAL	300K	1%	1/6W	
R533	1-247-879-00	CARBON	100K	5%	1/6W	
R534	1-247-809-00	CARBON	120	5%	1/6W	
R535	1-247-859-00	CARBON	15K	5%	1/6W	
R536	1-247-807-00	CARBON	100	5%	1/6W	
R537	1-249-429-11	CARBON	10K	5%	1/6W	
R538	1-247-831-00	CARBON	1K	5%	1/6W	
R596	1-247-831-00	CARBON	1K	5%	1/6W	
R597	1-246-517-25	CARBON	68K	5%	1/4W	
R599	1-215-889-00	METAL OXIDE	330	5%	2W	F
R801	1-249-429-11	CARBON	10K	5%	1/6W	
R802	1-249-429-11	CARBON	10K	5%	1/6W	
R803	1-249-429-11	CARBON	10K	5%	1/6W	
R804	1-247-867-00	CARBON	33K	5%	1/6W	
R805	1-249-429-11	CARBON	10K	5%	1/6W	
R806	1-249-429-11	CARBON	10K	5%	1/6W	
R807	1-247-867-00	CARBON	33K	5%	1/6W	
R808	1-249-429-11	CARBON	10K	5%	1/6W	
R809	1-249-429-11	CARBON	10K	5%	1/6W	
R810	1-247-867-00	CARBON	33K	5%	1/6W	
R811	1-249-429-11	CARBON	10K	5%	1/6W	
R812	1-249-429-11	CARBON	10K	5%	1/6W	
R813	1-247-867-00	CARBON	33K	5%	1/6W	
R814	1-249-429-11	CARBON	10K	5%	1/6W	
R815	1-249-429-11	CARBON	10K	5%	1/6W	
R816	1-249-429-11	CARBON	10K	5%	1/6W	
R817	1-249-429-11	CARBON	10K	5%	1/6W	
R818	1-249-429-11	CARBON	10K	5%	1/6W	
R819	1-249-429-11	CARBON	10K	5%	1/6W	
R820	1-247-879-00	CARBON	100K	5%	1/6W	
R821	1-247-863-00	CARBON	22K	5%	1/6W	
R822	1-249-429-11	CARBON	10K	5%	1/6W	
R823	1-247-837-00	CARBON	1.8K	5%	1/6W	
R824	1-247-837-00	CARBON	1.8K	5%	1/6W	
R825	1-249-434-11	CARBON	27K	5%	1/6W	
R826	1-247-843-00	CARBON	3.3K	5%	1/6W	
R827	1-247-688-11	CARBON	10	5%	1/4W	
R828	1-216-429-00	METAL OXIDE	270	5%	1W	F
R829	1-247-859-00	CARBON	15K	5%	1/6W	
R830	1-249-429-11	CARBON	10K	5%	1/6W	
R831	1-247-837-00	CARBON	1.8K	5%	1/6W	
R832	1-247-837-00	CARBON	1.8K	5%	1/6W	
R833	1-247-819-00	CARBON	330	5%	1/6W	
R834	1-249-429-11	CARBON	10K	5%	1/6W	
R835	1-247-843-00	CARBON	3.3K	5%	1/6W	
R836	1-249-421-11	CARBON	2.2K	5%	1/6W	
R837	1-247-847-00	CARBON	4.7K	5%	1/6W	
R838	1-249-429-11	CARBON	10K	5%	1/6W	
R839	1-249-409-11	CARBON	220	5%	1/6W	F
R840	1-249-409-11	CARBON	220	5%	1/6W	F
R841	1-249-429-11	CARBON	10K	5%	1/6W	
R842	1-215-886-11	METAL OXIDE	100	5%	2W	F
R843	1-215-882-00	METAL OXIDE	22	5%	2W	F
R844	1-247-833-00	CARBON	1.2K	5%	1/6W	
R845	1-215-882-00	METAL OXIDE	22	5%	2W	F
R901	1-247-804-00	CARBON	75	5%	1/6W	
R902	1-247-804-00	CARBON	75	5%	1/6W	
R903	1-247-804-00	CARBON	75	5%	1/6W	
R904	1-249-437-11	CARBON	47K	5%	1/6W	
R905	1-247-831-00	CARBON	1K	5%	1/6W	
R906	1-249-437-11	CARBON	47K	5%	1/6W	
R907	1-247-831-00	CARBON	1K	5%	1/6W	
R908	1-247-807-00	CARBON	100	5%	1/6W	
R909	1-247-841-00	CARBON	2.7K	5%	1/6W	
R910	1-247-807-00	CARBON	100	5%	1/6W	
R911	1-247-127-00	CARBON	680	5%	1/4W	
R912	1-247-713-11	CARBON	1K	5%	1/4W	
R913	1-247-813-00	CARBON	180	5%	1/6W	
R914	1-247-807-00	CARBON	100	5%	1/6W	
R915	1-214-687-00	METAL	18	1%	1/4W	
R916	1-214-685-00	METAL	15	1%	1/4W	
R917	1-247-831-00	CARBON	1K	5%	1/6W	
R918	1-247-831-00	CARBON	1K	5%	1/6W	
R921	1-247-127-00	CARBON	680	5%	1/4W	
R922	1-247-713-11	CARBON	1K	5%	1/4W	
R923	1-247-813-00	CARBON	180	5%	1/6W	
R924	1-247-807-00	CARBON	100	5%	1/6W	
R925	1-214-687-00	METAL	18	1%	1/4W	
R926	1-214-685-00	METAL	15	1%	1/4W	
R927	1-247-831-00	CARBON	1K	5%	1/6W	
R928	1-247-831-00	CARBON	1K	5%	1/6W	
R931	1-247-127-00	CARBON	680	5%	1/4W	
R932	1-247-713-11	CARBON	1K	5%	1/4W	
R933	1-247-813-00	CARBON	180	5%	1/6W	
R934	1-247-807-00	CARBON	100	5%	1/6W	
R935	1-214-687-00	METAL	18	1%	1/4W	
R936	1-214-685-00	METAL	15	1%	1/4W	
R937	1-247-831-00	CARBON	1K	5%	1/6W	
R938	1-247-831-00	CARBON	1K	5%	1/6W	
R941	1-247-827-00	CARBON	680	5%	1/6W	
R942	1-247-791-00	CARBON	22	5%	1/6W	
R943	1-247-791-00	CARBON	22	5%	1/6W	
R944	1-247-791-00	CARBON	22	5%	1/6W	

VARIABLE RESISTOR

RV001	1-224-254-XX	RES, ADJ, METAL GLAZE 47K
RV006	1-224-253-XX	RES, ADJ, METAL GLAZE 22K
RV008	1-224-253-XX	RES, ADJ, METAL GLAZE 22K
RV801	1-224-253-XX	RES, ADJ, METAL GLAZE 22K
RV802	1-224-253-XX	RES, ADJ, METAL GLAZE 22K
RV803	1-224-253-XX	RES, ADJ, METAL GLAZE 22K
RV804	1-224-252-XX	RES, ADJ, METAL GLAZE 10K

Ref.No.	Part No.	Description				Remark
RV805	1-224-252-XX	RES, ADJ, METAL GLAZE 10K				
RV806	1-224-251-XX	RES, ADJ, METAL GLAZE 4.7K				
RV807	1-224-248-XX	RES, ADJ, METAL GLAZE 470				
RV901	1-224-256-XX	RES, ADJ, METAL GLAZE 220K				
RV902	1-224-254-XX	RES, ADJ, METAL GLAZE 47K				
RV911	1-224-248-XX	RES, ADJ, METAL GLAZE 470				
RV921	1-224-248-XX	RES, ADJ, METAL GLAZE 470				
RV931	1-224-248-XX	RES, ADJ, METAL GLAZE 470				
**********						
	*A-1330-647-A	CB BOARD, COMPLETE				
		**********				
	1-526-762-00	SOCKET, CRT				
	*4-370-995-01	COVER (LOWER), H.STAT				
	*4-370-996-01	COVER (UPPER), H.STAT				
		CAPACITOR				
C701	1-162-116-00	CERAMIC	680PF	10%	2KV	
		NEON LAMP				
NL701	1-519-371-11	LAMP, NEON				
NL702	1-519-371-11	LAMP, NEON				
NL703	1-519-371-11	LAMP, NEON				
		RESISTOR				
R701	1-202-719-00	SOLID	1M	10%	1/2W	
R704	1-202-842-51	SOLID	220K		1/2W	
R705	1-216-393-00	METAL OXIDE	2.2	5%	3W	F
R706	1-202-824-00	SOLID	3.3K		1/2W	
R707	1-202-824-00	SOLID	3.3K		1/2W	
		VARIABLE RESISTOR				
RV703	1-230-164-21	RES, ADJ, METAL GLAZE 55M				
**********						
	*A-1345-567-A	D BOARD, COMPLETE				
		**********				
	3-531-576-31	RIVET (DIA. 3), NYLON				
	4-302-428-00	HEAD, WASHER, TAPPING SCREW				
	4-303-483-00	HEAD, WASHER, TAPPING SCREW				
	*4-323-833-00	HEAT SINK, PIN OUT				
	4-363-414-00	SPACER, MICA				
		CAPACITOR				
C501	1-123-380-00	ELECT	1MF	20%	50V	
C502	1-136-173-00	FILM	0.47MF	5%	50V	
C503	1-108-587-00	MYLAR	0.022MF	5%	50V	
C504	1-106-198-00	MYLAR	0.012MF	10%	100V	
C505	1-123-380-00	ELECT	1MF	20%	50V	
C506	1-123-380-00	ELECT	1MF	20%	50V	
C507	1-130-027-00	FILM	0.0056MF	5%	50V	
C510	1-123-380-00	ELECT	1MF	20%	50V	
C511	1-123-382-00	ELECT	3.3MF	20%	50V	
C512	1-124-005-51	ELECT	4.7MF	20%	50V	

Ref.No.	Part No.	Description				Remark
C513	1-123-318-00	ELECT	33MF	20%	16V	
C514	1-108-603-00	MYLAR	0.1MF	5%	50V	
C515	1-108-595-00	MYLAR	0.047MF	5%	50V	
C516	1-123-369-00	ELECT	4.7MF	20%	50V	
C517	1-123-323-00	ELECT	470MF	20%	16V	
C518	1-136-173-00	FILM	0.47MF	5%	50V	
C519	1-123-380-00	ELECT	1MF	20%	50V	
C520	1-123-380-00	ELECT	1MF	20%	50V	
C521	1-108-579-00	MYLAR	0.01MF	5%	50V	
C522	1-106-172-00	MYLAR	0.001MF	10%	100V	
C523	1-123-380-00	ELECT	1MF	20%	50V	
C524	1-123-348-00	ELECT	470MF	20%	35V	
C526	1-123-369-00	ELECT	4.7MF	20%	50V	
C527	1-108-579-00	MYLAR	0.01MF	5%	50V	
C528	1-102-030-00	CERAMIC	330PF	10%	500V	
C529	1-123-345-00	ELECT	100MF	20%	35V	
C533	1-102-038-00	CERAMIC	0.001MF		500V	
C543	1-101-003-00	CERAMIC	0.0047MF		50V	
C544	1-101-003-00	CERAMIC	0.0047MF		50V	
C545	1-102-228-00	CERAMIC	470PF	10%	500V	
C546	1-123-333-00	ELECT	100MF	20%	16V	
C547	1-124-493-00	ELECT	1MF	20%	160V	
C548	1-106-188-00	MYLAR	0.0047MF	10%	100V	
C549	1-106-172-00	MYLAR	0.001MF	10%	100V	
C550	1-136-103-00	FILM	0.1MF	5%	200V	
C551	1-106-196-00	MYLAR	0.01MF	10%	100V	
C552	1-108-431-00	MYLAR	0.068MF	10%	200V	
C553	1-102-030-00	CERAMIC	330PF	10%	500V	
C554	1-102-030-00	CERAMIC	330PF	10%	500V	
C555	⚠1-162-135-51	CERAMIC	560PF	10%	2KV	
C556	1-106-367-00	MYLAR	0.01MF	10%	200V	
C557	⚠1-136-092-11	FILM	0.0072MF	3%	2KV	
C558	⚠1-129-716-51	FILM	0.015MF	10%	630V	
C559	1-136-308-11	FILM	0.68MF	5%	200V	
C560	1-108-433-00	MYLAR	0.1MF	10%	200V	
C561	1-136-179-00	FILM	1.5MF	5%	200V	
C562	1-130-797-11	FILM	0.68MF	10%	250V	
C563	1-102-223-00	CERAMIC	0.0047MF	10%	2KV	
C568	1-123-348-00	ELECT	470MF	20%	35V	
C569	1-123-333-00	ELECT	100MF	20%	25V	
C570	1-123-333-00	ELECT	100MF	20%	25V	
C572	1-123-333-00	ELECT	100MF	20%	16V	
C574	1-108-429-00	MYLAR	0.047MF	10%	200V	
C575	1-123-024-00	ELECT	33MF		160V	
C581	1-123-388-00	ELECT	100MF	20%	100V	
C583	1-136-173-00	FILM	0.47MF	5%	50V	
C584	1-123-356-00	ELECT	10MF	20%	50V	
C585	1-123-332-00	ELECT	47MF	20%	16V	
C586	1-123-332-00	ELECT	47MF	20%	16V	
C587	1-123-332-00	ELECT	47MF	20%	16V	
C588	1-123-379-00	ELECT	0.47MF	20%	50V	
C589	1-106-208-00	MYLAR	0.033MF	10%	100V	

NOTE:

The components identified by shading and mark ⚠ are critical for safety. Replace only with part number specified.

D

Ref.No.	Part No.	Description	Remark
		CONNECTOR	
D1	*1-506-559-11	PLUG, CONNECTOR (2.5MM) 4P	
D2	*1-506-558-11	PLUG, CONNECTOR (2.5MM) 3P	
D3	*1-564-038-00	CONNECTOR PLUG, DY (MINI) 6P	
D5	*1-508-765-00	3P PLUG (M)	
D6	*1-506-559-11	PLUG, CONNECTOR (2.5MM) 4P	
D7	*1-506-559-11	PLUG, CONNECTOR (2.5MM) 4P	
D8	*1-506-561-11	PLUG, CONNECTOR (2.5MM) 6	
		DIODE	
D501	8-719-102-74	DIODE RD6.2E-N2	
D502	8-719-911-55	DIODE U05G	
D504	8-719-115-21	DIODE RD39JSB	
D507	8-719-911-55	DIODE U05G	
D508	8-719-305-15	DIODE GH3F	
D509	8-719-928-08	DIODE ERD28-08S	
D510	8-719-300-65	DIODE ES1F	
D515	8-719-924-06	DIODE ERC24-06S	
D516	8-719-924-06	DIODE ERC24-06S	
D517	8-719-924-06	DIODE ERC24-06S	
D519	8-719-901-40	DIODE SIB01-02T5	
D521	8-719-911-19	DIODE 1SS119	
D522	8-719-911-55	DIODE U05G	
D523	8-719-924-06	DIODE ERC24-06S	
D524	8-719-924-06	DIODE ERC24-06S	
D525	8-719-300-76	DIODE RH1A	
D526	8-719-300-76	DIODE RH1A	
		VARISTOR	
D520	1-807-180-11	VARISTOR SNR-14A300K	
		IC	
IC501	8-759-100-60	IC UPC1377C	
IC502	8-759-905-39	IC TDA1082	
IC503	8-759-700-08	IC NJM4558S	
IC505	8-759-178-12	IC UPC78L12	
IC507	8-759-113-78	IC UPC1378H-L	
		COIL	
L502	1-459-075-00	COIL, DYNAMIC CONVERSION CHOKE	
L503	1-407-365-00	COIL, CHOKE (HIGH FREQUENCY)	
L504 ⚠	1-459-110-11	COIL, DUST CORE	
L505 ⚠	1-459-622-11	HLC	
L506	1-408-231-00	MICRO INDUCTOR 1MMH	
L509	1-459-104-00	COIL, DUST CORE	
L510	1-421-370-00	COIL, CHOKE	
		NEON LAMP	
NL601	1-519-237-11	LAMP, NEON	
		TRANSISTOR	
Q506	8-729-313-42	TRANSISTOR 2SD1134	
Q507	8-729-168-82	TRANSISTOR 2SC2688	
Q508	8-729-804-27	TRANSISTOR 2SC3688	
Q511	8-729-117-52	TRANSISTOR 2SA1175-J	
Q512	8-729-177-43	TRANSISTOR 2SD774	
Q513	8-729-178-54	TRANSISTOR 2SC2785	
Q514	8-729-178-54	TRANSISTOR 2SC2785	
Q515	8-729-900-36	TRANSISTOR DTC124ES	
Q516	8-729-177-43	TRANSISTOR 2SD774	
Q517	8-729-374-02	TRANSISTOR 2SB740	
		RESISTOR	
R501	1-247-841-00	CARBON 2.7K 5% 1/6W	
R502	1-247-863-00	CARBON 22K 5% 1/6W	
R503	1-247-869-00	CARBON 39K 5% 1/6W	
R504	1-247-853-00	CARBON 8.2K 5% 1/6W	
R505	1-247-852-00	CARBON 7.5K 5% 1/6W	
R507	1-215-457-00	METAL 33K 1% 1/6W	
R508	1-215-488-00	METAL 620K 1% 1/6W	
R509	1-247-851-00	CARBON 6.8K 5% 1/6W	
R510	1-247-867-00	CARBON 33K 5% 1/6W	
R511	1-249-429-11	CARBON 10K 5% 1/6W	
R512	1-215-464-00	METAL 62K 1% 1/6W	
R513	1-215-473-00	METAL 150K 1% 1/6W	
R514	1-215-456-00	METAL 30K 1% 1/6W	
R515	1-249-429-11	CARBON 10K 5% 1/6W	
R516	1-247-851-00	CARBON 6.8K 5% 1/6W	
R517	1-247-807-00	CARBON 100 5% 1/6W	
R518	1-247-863-00	CARBON 22K 5% 1/6W	
R519	1-247-837-00	CARBON 1.8K 5% 1/6W	
R520	1-247-879-00	CARBON 100K 5% 1/6W	
R521	1-247-869-00	CARBON 39K 5% 1/6W	
R522	1-247-859-00	CARBON 15K 5% 1/6W	
R523	1-249-429-11	CARBON 10K 5% 1/6W	
R524	1-247-863-00	CARBON 22K 5% 1/6W	
R525	1-247-863-00	CARBON 22K 5% 1/6W	
R526	1-247-847-00	CARBON 4.7K 5% 1/6W	
R527	1-247-841-00	CARBON 2.7K 5% 1/6W	
R528	1-216-376-00	METAL OXIDE 3.9 5% 2W	F
R529	1-215-889-00	METAL OXIDE 330 5% 2W	F
R530	1-249-421-11	CARBON 2.2K 5% 1/6W	
R531	1-247-698-11	CARBON 68 5% 1/4W	
R532	1-247-877-00	CARBON 82K 5% 1/6W	
R543	1-247-807-00	CARBON 100 5% 1/6W	
R544	1-247-843-00	CARBON 3.3K 5% 1/6W	
R555	1-215-437-00	METAL 4.7K 1% 1/6W	
R556	1-215-445-00	METAL 10K 1% 1/6W	
■R557 ⚠		CARBON 1/6W	
R558	1-249-429-11	CARBON 10K 5% 1/6W	
R559	1-247-853-00	CARBON 8.2K 5% 1/6W	
R560	1-247-875-00	CARBON 68K 5% 1/6W	
R561	1-247-861-00	CARBON 18K 5% 1/6W	
R562	1-247-863-00	CARBON 22K 5% 1/6W	
R563	1-247-863-00	CARBON 22K 5% 1/6W	
R564	1-247-845-00	CARBON 3.9K 5% 1/6W	
R566	1-247-845-00	CARBON 3.9K 5% 1/6W	

The components identified by shading and mark ⚠ are critical for safety. Replace only with part number specified.

* The components identified by ■ in this parts list have been carefully factory-selected for each set in order to satisfy regulations regarding X-ray radiation. Should replacement be required, replace only with the value originally used.

Ref.No.	Part No.	Description				Remark
R567	1-247-831-00	CARBON	1K	5%	1/6W	
R568	1-215-920-11	METAL OXIDE	3.3K	5%	3W	F
R569	1-215-920-11	METAL OXIDE	3.3K	5%	3W	F
R570	1-249-421-11	CARBON	2.2K	5%	1/6W	
R571	1-249-429-11	CARBON	10K	5%	1/6W	
R572	1-216-484-00	METAL OXIDE	3.9K	5%	3W	F
R573	1-216-397-11	METAL OXIDE	4.7	5%	3W	F
R574	1-215-891-11	METAL OXIDE	680	5%	2W	F
R575	1-215-888-00	METAL OXIDE	220	5%	2W	F
R576	1-215-892-11	METAL OXIDE	1K	5%	2W	F
R577	1-217-418-00	FUSIBLE	0.47	10%	1/2W	F
R578	1-217-418-00	FUSIBLE	0.47	10%	1/2W	F
R579	1-217-418-00	FUSIBLE	0.47	10%	1/2W	F
R580	1-247-173-00	CARBON	56K	5%	1/4W	
R593	1-247-815-00	CARBON	220	5%	1/6W	
R598	1-249-377-11	CARBON	0.47	5%	1/6W	F
R600	1-215-898-11	METAL OXIDE	10K	5%	2W	F
R601	1-249-429-11	CARBON	10K	5%	1/6W	
R602	1-247-879-00	CARBON	100K	5%	1/6W	
R603	1-249-429-11	CARBON	10K	5%	1/6W	
R604	1-247-863-00	CARBON	22K	5%	1/6W	
R605	1-247-891-00	CARBON	330K	5%	1/6W	
R606	1-249-429-11	CARBON	10K	5%	1/6W	
R607	1-216-456-00	METAL OXIDE	820	5%	2W	F
R608	1-215-916-00	METAL OXIDE	680	5%	3W	F
R609	1-247-145-00	CARBON	3.9K	5%	1/4W	
R610	1-247-721-11	CARBON	4.7K	5%	1/4W	
R612	1-215-880-00	METAL OXIDE	10	5%	2W	F
R613	1-249-383-11	CARBON	1.5	5%	1/6W	F
R614	1-249-383-11	CARBON	1.5	5%	1/6W	F
R615	1-215-910-00	METAL OXIDE	68	5%	3W	F
R616	1-247-869-00	CARBON	39K	5%	1/6W	
R617	1-202-727-00	SOLID	4.7M	10%	1/2W	
R618	1-247-879-00	CARBON	100K	5%	1/6W	

VARIABLE RESISTOR

RV501	1-224-250-XX	RES, ADJ, METAL GLAZE 2.2K
RV502	1-224-550-21	RES, ADJ, METAL GLAZE 220
RV503	1-224-249-XX	RES, ADJ, METAL GLAZE 1K
RV504	1-224-252-XX	RES, ADJ, METAL GLAZE 10K
RV505	1-224-249-XX	RES, ADJ, METAL GLAZE 1K
RV506	1-224-249-XX	RES, ADJ, METAL GLAZE 1K
RV507	1-224-252-XX	RES, ADJ, METAL GLAZE 10K
RV509	1-224-248-XX	RES, ADJ, METAL GLAZE 470
RV510	1-224-254-XX	RES, ADJ, METAL GLAZE 47K
RV511	1-224-255-XX	RES, ADJ, METAL GLAZE 100K
RV512	1-224-255-XX	RES, ADJ, METAL GLAZE 100K

SPARK GAP

SG501	1-519-063-XX	DISCHARGING GAP

Ref.No.	Part No.	Description	Remark

TRANSFORMER

T501	1-437-078-00	TRANSFORMER, HORIZONTAL DRIVE
T502 ⚠	1-439-375-11	TRANSFORMER ASSY, FLYBACK
T504	1-421-815-11	TRANSFORMER, FERRITE (HCT)

****

*A-1389-694-A CA BOARD, COMPLETE
****

CAPACITOR

C703	1-123-935-00	ELECT	33MF	20%	160V
C705	1-129-722-00	FILM	0.047MF	10%	630V
C711	1-123-356-00	ELECT	10MF	20%	25V
C712	1-123-388-00	ELECT	100MF	20%	100V
C713	1-106-220-00	MYLAR	0.1MF	10%	100V
C714	1-123-356-00	ELECT	10MF	20%	50V
C721	1-123-356-00	ELECT	10MF	20%	25V
C722	1-123-388-00	ELECT	100MF	20%	100V
C723	1-106-220-00	MYLAR	0.1MF	10%	100V
C724	1-123-356-00	ELECT	10MF	20%	50V
C731	1-123-356-00	ELECT	10MF	20%	25V
C732	1-123-388-00	ELECT	100MF	20%	100V
C733	1-106-220-00	MYLAR	0.1MF	10%	100V
C734	1-123-356-00	ELECT	10MF	20%	50V

DIODE

D711	8-719-901-83	DIODE 1SS83
D712	8-719-901-83	DIODE 1SS83
D713	8-719-300-65	DIODE ES1F
D721	8-719-901-83	DIODE 1SS83
D722	8-719-901-83	DIODE 1SS83
D723	8-719-300-65	DIODE ES1F
D731	8-719-901-83	DIODE 1SS83
D732	8-719-901-83	DIODE 1SS83
D733	8-719-300-65	DIODE ES1F

COIL

L711	1-407-687-00	MICRO INDUCTOR 3.3UH
L712	1-407-685-00	MICRO INDUCTOR 2.2UH
L721	1-407-687-00	MICRO INDUCTOR 3.3UH
L722	1-407-685-00	MICRO INDUCTOR 2.2UH
L731	1-407-687-00	MICRO INDUCTOR 3.3UH
L732	1-407-685-00	MICRO INDUCTOR 2.2UH

NEON LAMP

NL711	1-519-237-11	LAMP, NEON
NL721	1-519-237-11	LAMP, NEON
NL731	1-519-237-11	LAMP, NEON

TRANSISTOR

Q711	8-729-306-92	TRANSISTOR 2SD669A
	4-370-970-01	SPACER, TR; Q711

The components identified by shading and mark ⚠ are critical for safety. Replace only with part number specified.

Ref.No.	Part No.	Description				Remark
Q721	8-729-306-92	TRANSISTOR 2SD669A				
	4-370-970-01	SPACER, TR; Q721				
Q731	8-729-306-92	TRANSISTOR 2SD669A				
	4-370-970-01	SPACER, TR; Q731				
		RESISTOR				
R702	1-202-723-00	SOLID	2.2M	10%	1/2W	
R703	1-202-719-00	SOLID	1M	10%	1/2W	
R708	1-202-719-00	SOLID	1M	10%	1/2W	
R711	1-215-995-00	METAL	470	5%	10W	
R712	1-202-549-00	SOLID	100	20%	1/2W	
R713	1-247-829-00	CARBON	820	5%	1/6W	
R714	1-215-923-00	METAL OXIDE	10K	5%	3W	F
R715	1-247-903-00	CARBON	1M	5%	1/6W	
R716	1-247-799-00	CARBON	47	5%	1/6W	
R721	1-215-995-00	METAL	470	5%	10W	
R722	1-202-549-00	SOLID	100	20%	1/2W	
R723	1-247-829-00	CARBON	820	5%	1/6W	
R724	1-215-923-00	METAL OXIDE	10K	5%	3W	F
R725	1-247-903-00	CARBON	1M	5%	1/6W	
R726	1-247-799-00	CARBON	47	5%	1/6W	
R731	1-215-995-00	METAL	470	5%	10W	
R732	1-202-549-00	SOLID	100	20%	1/2W	
R733	1-247-829-00	CARBON	820	5%	1/6W	
R734	1-215-923-00	METAL OXIDE	10K	5%	3W	F
R735	1-247-903-00	CARBON	1M	5%	1/6W	
R736	1-247-799-00	CARBON	47	5%	1/6W	
		VARIABLE RESISTOR				
RV701	1-226-114-00	RES, ADJ, METAL GLAZE 2.2M				
RV702	1-226-063-00	RES, ADJ, CARBON 2.2M				
RV711	1-224-251-XX	RES, ADJ, METAL GLAZE 4.7K				
RV721	1-224-251-XX	RES, ADJ, METAL GLAZE 4.7K				
RV731	1-224-251-XX	RES, ADJ, METAL GLAZE 4.7K				

****

MISCELLANEOUS
****

⚠	1-230-666-11	RESISTOR ASSY, HIGH-VOLTAGE
⚠	1-451-278-11	DEFLECTION YOKE (SY-149H)
	1-452-146-21	MAGNET, BMC
⚠	1-452-214-22	CRT NECK ASSY (H TYPE)
L901 ⚠	1-426-043-12	COIL, DEGAUSSING
V901 ⚠	8-736-554-05	CRT (M23JHU15X)

The components identified by shading and mark ⚠ are critical for safety. Replace only with part number specified.

HARDWARE NOMENCLATURE

Screw: – P 3 x 10

- *L: Length in mm*
- *D: Diameter in mm*
- *Type of head*
- *Indicated slotted-head only. Unless otherwise indicated, it means cross-recessed head (Phillips type).*

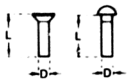

Nut, Washer, Retaining ring: N 3

- *Diameter of usable screw or shaft*
- *Reference designation*

Reference Designation	Shape	Description	Remarks
		SCREWS	
P		pan-head screw	binding-head (B) screw for replacement
PWH		pan-head screw with washer face	binding-head (B) screw and flat washer for replacement
PS PSP		pan-head screw with spring washer	binding-head (B) screw and spring washer for replacement
PSW PSPW		pan-head screw with spring and flat washers	binding-head (B) screw and spring and flat washers for replacement
R		round-head screw	binding-head (B) screw for replacement
K		flat-countersunk-head screw	
RK		oval-countersunk-head screw	
B		binding-head screw	
T		truss-head screw	binding-head (B) screw for replacement
F		flat-fillister-head screw	
RF		fillister-head screw	
BV		brazier-head screw	

Reference Designation	Shape	Description	Remarks
		SELF-TAPPING SCREWS	
TA		self-tapping screw	ex: TA, P 3 x 10
PTP		pan-head self-tapping screw	binding-head self-tapping (TA, B) screw for replacement
PTPWH		pan-head self-tapping screw with washer face	binding-head self tapping (TA, B) screw and flat washer for replacement
PTTWH		pan-head thread-rolling screw with washer face	binding-head (B) screw and flat washer for replacement
		SET SCREWS	
SC		set screw	
SC		hexagon-socket set screw	ex: SC 2 6 x 4, hexagon socket
		NUT	
N		nut	
		WASHERS	
W		flat washer	
SW		spring washer	
LW		internal-tooth lock washer	ex: LW3, internal
LW		external-tooth lock washer	ex: LW3, external
		RETAINING RINGS	
E		retaining ring	
G		grip-type retaining ring	

9-963-487-00

Sony Corporation

85IJ04015-1
Printed in Japan
© 1985