Desk Guardian

Proximity-based Workspace Awareness System

TECHIN 514 · Taya (Xintong) Li

github.com/tong0701/TECHIN514/tree/main/Project

Problem & Solution

01 Invisible Boundaries

In shared workspaces, our personal boundaries are often invisible. There is a strong need for a recognizable, physical object that can naturally communicate our current status and help protect our personal space before an interruption occurs.

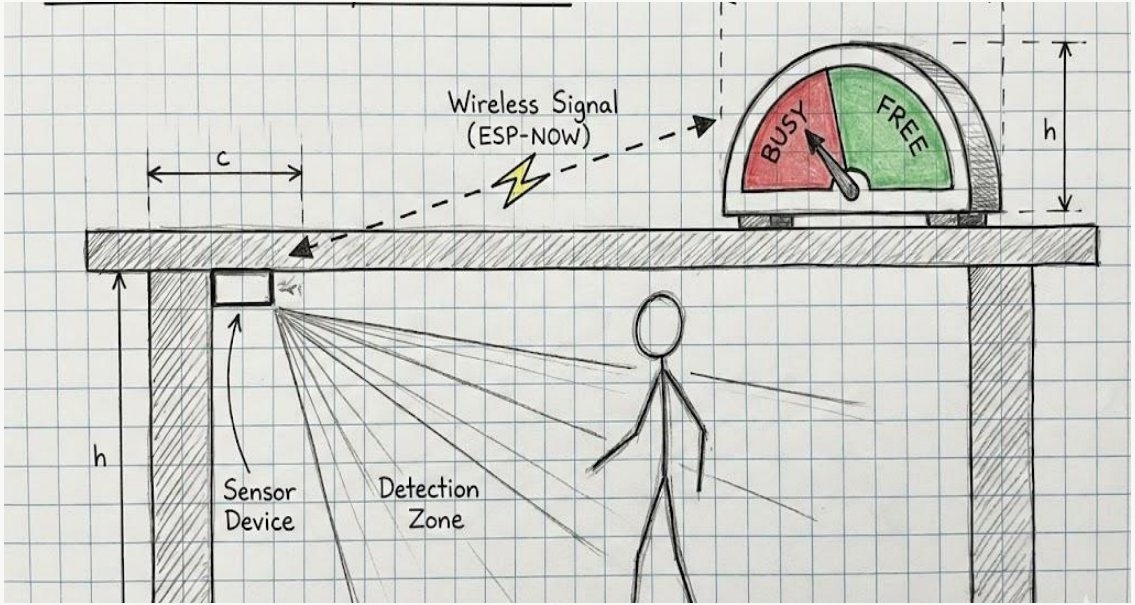

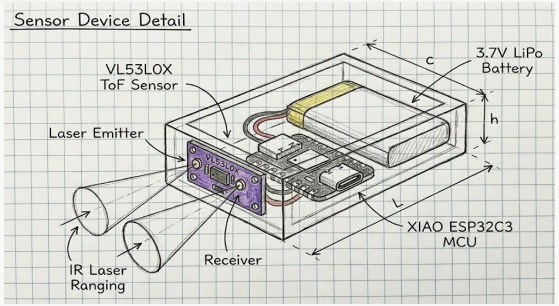

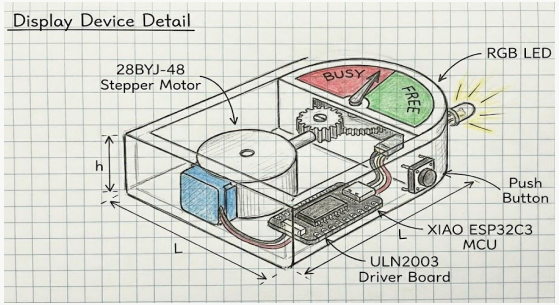

System Architecture

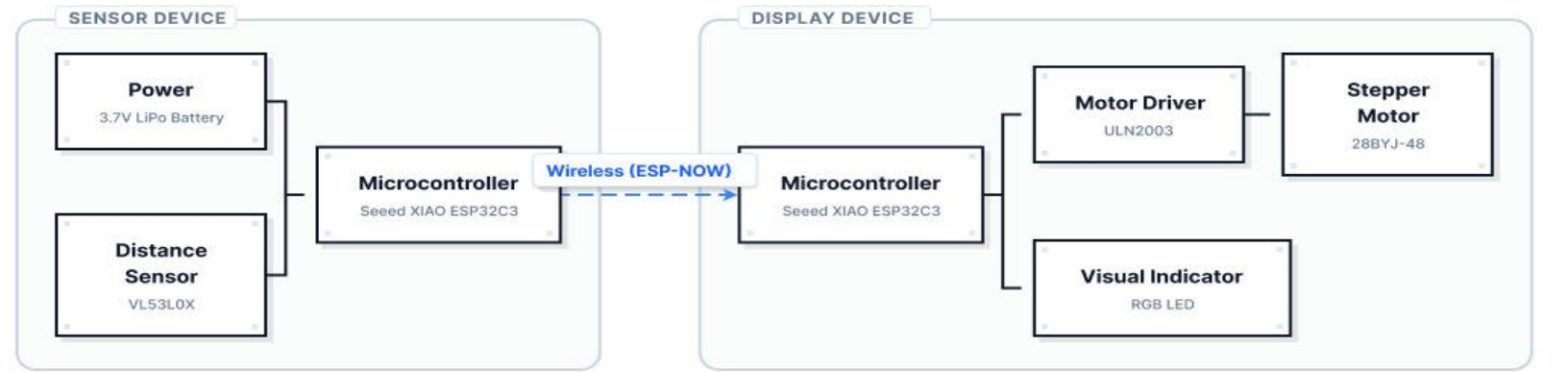

Sensor Device BLE Client

XIAO ESP32C3 · HC-SR04 · Custom PCB · TRIG:D9 ECHO:D8

- Reads distance every 50 ms
- Applies 5-sample moving average
- Classifies: SAFE / APPROACHING / TOO CLOSE
- Transmits state via BLE
- Pins: TRIG→D9 ECHO→D8

Display Device BLE Server

XIAO ESP32C3 · 28BYJ-48 + ULN2003 · RGB LED · Switch · Custom PCB · LiPo Battery

- Advertises & awaits BLE connection
- Receives proximity state
- Drives motor to zone position
- Updates LED color
- Pins: Motor→D0-D3 LED→D4-D6 BTN→D10

Schematics & PCB

Sensor Schematic

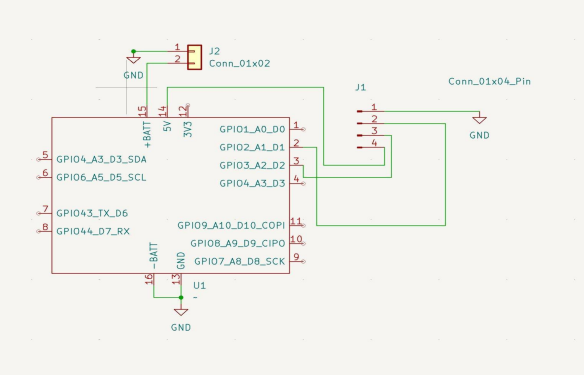

Display Schematic

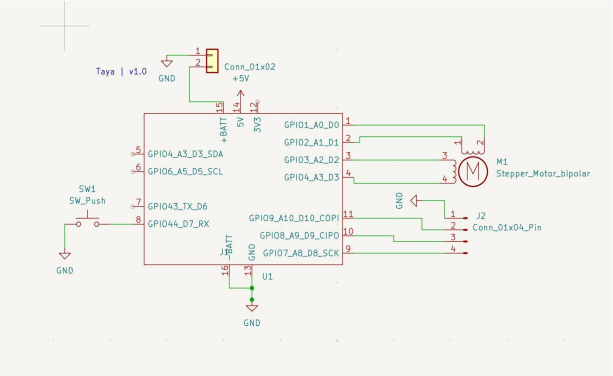

Sensor PCB

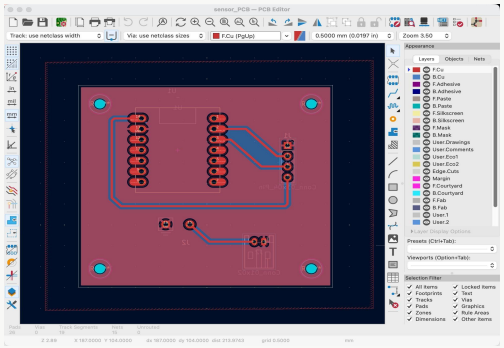

Display PCB

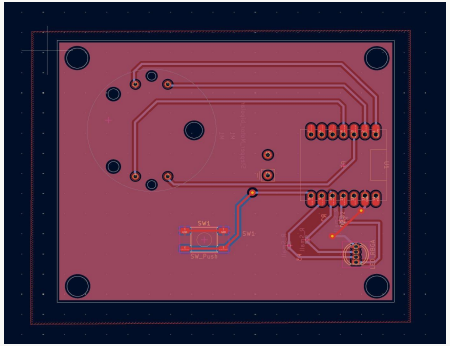

Critical Components

Sensor Device

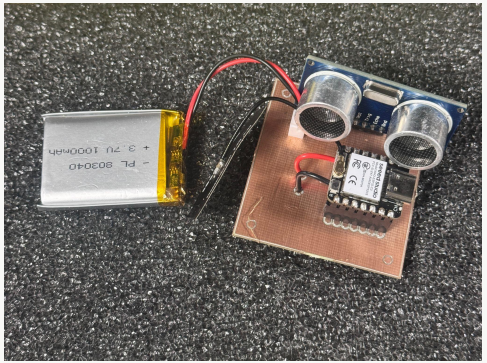

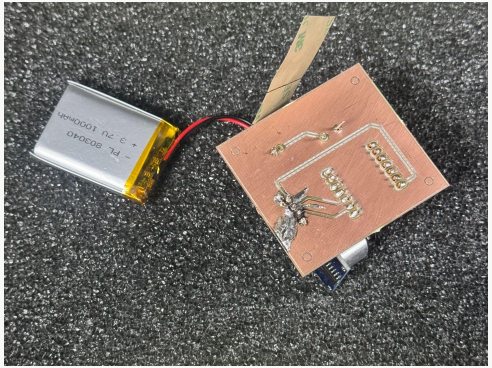

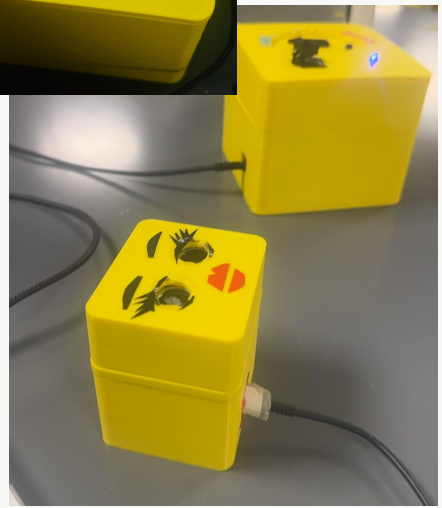

Display Device

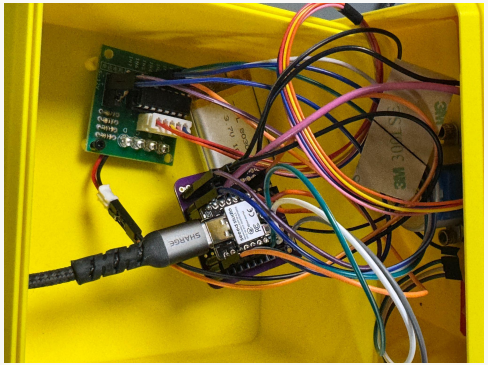

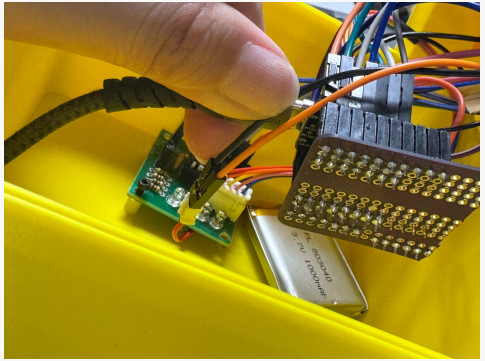

System Logic Flow

1 Read
HC-SR04
100 ms

→

2 Smooth
Moving avg
n = 3

→

3 Classify
3 states
+ hysteresis

→

4 BLE Send
On state
change only

→

5 Display
Motor + LED

The sensor node classifies distance into three proximity states and transmits them wirelessly to the display device.

SAFE > 150 cm
Blue LED · Pointer left

Workspace is clear.

APPROACHING 45–150 cm
Red blink · Pointer center

Someone entering the zone.

TOO CLOSE < 45 cm
Red solid · Pointer right

Personal space crossed.

Auto-reset: TOO CLOSE held 3s with no change ⟶ auto-send APPROACHING + 5s cooldown. Person leaves ⟶ immediate reset to SAFE.

Hysteresis: TOO CLOSE exits at >60 cm · SAFE exits at <130 cm prevents state flickering at threshold boundaries.

Signal Processing & Battery

Signal Pipeline

1 Raw Read

HC-SR04 polled every 100 ms via Trig/Echo GPIO.

2 Moving Average

5-sample sliding window smooths spike noise.

3 State Classification

< 45 cm ⟶ TOO CLOSE · 45–150 cm ⟶ APPROACHING · > 150 cm ⟶ SAFE · TOO CLOSE auto-resets after 3s, 5s cooldown

4 BLE Transmit

State string notified to Display Device via BLE characteristic.

Battery

Sensor

3.7V · 1000 mAh

ESP32C3 + BLE	~80 mA
HC-SR04	~15 mA
Total	**~95 mA**

Runtime: ~10 hrs

Display

3.7V · 1000 mAh

ESP32C3 + BLE	~80 mA
Stepper (active)	~240 mA
Peak	**~340 mA**

Runtime: ~2–3 hrs active / ~8 hrs idle

Budget Summary

Component	Qty	Unit Price	Total
Seeed Studio XIAO ESP32C3	2	~$5.00	~$10.00
28BYJ-48 Stepper + ULN2003	1	~$3.00	~$3.00
3.7V 1000 mAh LiPo Battery	2	TBD	TBD
HC-SR04 Ultrasonic Sensor	1	~$2.00	~$2.00
PCB Fabrication	2	—	lab-provided
Misc	—	—	~$2.00
Total			**~$17+**

Battery price TBD — update with receipt.

Future Work & Demo

01 Enclosure & Hardware Refinements

Battery voltage underestimated for display device requires USB power during operation. Future iteration will recalculate power requirements and select appropriate LiPo capacity. Enclosure dimensions need revision: overall size too large, USB port opening not aligned to correct height, and sensor window aperture too small for initial build.

02 Sensitivity & Threshold Calibration

Distance thresholds and motor speed require per-environment tuning. A future version could expose these as configurable parameters, or use an auto-calibration routine on first boot.

03 Visual Feedback Improvement

RGB LED green channel non-functional in current build due to hardware failure, limiting color expression to red/blue only. Future PCB revision should verify LED wiring and consider a brighter or individually addressable LED for clearer state indication.

04 BLE Stability

Occasional disconnects observed during extended use. Future work includes implementing auto-reconnect with exponential backoff and connection status indication on display.

Demo: *https://drive.google.com/file/d/1y1JuozKeC6GTdT54zdWIaoLAR-elOvjl/view?usp=drive_link*

GitHub: *https://github.com/tong0701/TECHIN514/tree/main/Project*